WTC
Drawing Book 6

Chapters 5-9

SKILLING, HELLE, CHRISTIANSEN, ROBERTSON — **Structural & Civil Engineers**

PROJECT: THE WORLD TRADE CENTER | TITLE: VERTICAL BRACING AND CONNECTIONS-- INDEX | DATE: 4/ 1/69

REVISIONS
Revised 5-1-69

WTCI-23-LERA

6-AB5- 2	SECTION A-A	6-AB5- 40	DETAIL 842	6-AB5- 79	DETAIL 881
6-AB5- 3	SECTION B-B	6-AB5- 40.1	DETAIL 842	6-AB5- 79.1	DETAIL 881
6-AB5- 3.1	SECTION B-B	6-AB5- 41	DETAIL 843	6-AB5- 79.2	DETAIL 881
6-AB5- 4	SECTION C-C	6-AB5- 42	DETAIL 844	6-AB5- 80	DETAIL 882
6-AB5- 5	MEMBERS A,B,C	6-AB5- 43	DETAIL 845	6-AB5- 81	DETAIL 883
6-AB5- 6	DETAIL 810	6-AB5- 44	DETAIL 846	6-AB5- 82	DETAIL 884
6-AB5- 6.1	DETAIL 810	6-AB5- 45	DETAIL 847	6-AB5- 83	DETAIL 885
6-AB5- 7	DETAIL 810	6-AB5- 46	DETAIL 848	6-AB5- 83.1	DETAIL 885
6-AB5- 7.1	DETAIL 812	6-AB5- 47	DETAIL 849	6-AB5- 83.2	DETAIL 885
6-AB5- 7.2	DETAIL 813	6-AB5- 48	DETAIL 850	6-AB5- 84	DETAIL 886
6-AB5- 7.3	DETAIL 813	6-AB5- 49	DETAIL 851	6-AB5- 85	DETAIL 887
6-AB5- 8	DETAIL 811	6-AB5- 49.1	DETAIL 851	6-AB5- 86	DETAIL 888
6-AB5- 9	DETAIL 811	6-AB5- 50	DETAIL 852	6-AB5- 86.1	CANT. BRACING
6-AB5- 10	DETAIL 812	6-AB5-50.1	DETAIL 852	6-AB5- 87	COLUMN REINF.
6-AB5- 10.2	DETAIL 812	6-AB5- 50.2	DETAIL 852	6-AB5- 88	COLUMN REINF.
6-AB5- 10.3	DETAIL 812	6-AB5- 51	DETAIL 853	6-AB5- 89	COLUMN REINF.
6-AB5- 10.4	DETAIL 812	6-AB5- 51.1	DETAIL 853	6-AB5- 90	COLUMN REINF.
6-AB5- 10.5	DETAIL 812	6-AB5- 52	DETAIL 854	6-AB5- 91	COLUMN REINF.
6-AB5- 10.6	DETAIL 812	6-AB5- 53	DETAIL 855	6-AB5- 92	COLUMN REINF.
6-AB5- 10.7	DETAIL 812	6-AB5- 53.1	DETAIL 855	6-AB5- 93	COLUMN REINF.
6-AB5- 10.8	DETAIL 812	6-AB5- 54	DETAIL 856	6-AB5- 94	COLUMN REINF.
6-AB5- 10.9	DETAIL 812	6-AB5- 55	DETAIL 857	6-AB5- 95	DETAIL 889
6-AB5- 10.10	DETAIL 812	6-AB5- 55.1	DETAIL 857	6-AB5- 96	ELEVATIONS
6-AB5- 11	DETAIL 813	6-AB5- 55.2	DETAIL 857	6-AB5- 97	ELEVATIONS
6-AB5- 11.1	DETAIL 813	6-AB5- 57	DETAIL 859	6-AB5- 97.1	ELEVATIONS
6-AB5- 11.2	DETAIL 813	6-AB5- 57.1	DETAIL 859	6-AB5- 98	ELEVATIONS
6-AB5- 11.3	DETAIL 813	6-AB5- 58	DETAIL 860	6-AB5- 99	ELEVATIONS
6-AB5- 11.4	DETAIL 813	6-AB5- 59	DETAIL 861	6-AB5-100	ELEVATIONS
6-AB5- 12	DETAIL 814	6-AB5- 59.1	DETAIL 861	6-AB5-101	ELEVATIONS
6-AB5- 13	DETAIL 815	6-AB5- 60	DETAIL 862	6-AB5-102	ELEVATIONS
6-AB5- 13.1	DETAIL 814	6-AB5- 61	DETAIL 863	6- B5-103	TEMP COL. BRACI
6-AB5- 14	DETAIL 816	6-AB5- 62	DETAIL 864	6- B5-103.1	TEMP COL. BRACI
6-AB5- 14.1	DETAIL 816	6-AB5- 63	DETAIL 865	6- B5-104	TEMP COL. BRACI
6-AB5- 15	DETAIL 817	6-AB5- 64	DETAIL 866	6- B5-105	TEMP COL. BRACI
6-AB5- 16	DETAIL 818	6-AB5- 65	DETAIL 867	6- B5-105.1	TEMP COL. BRACI
6-AB5- 28	DETAIL 830	6-AB5- 65.1	DETAIL 867	6- B5-106	TEMP COL. BRACI
6-AB5- 29	DETAIL 831	6-AB5- 66	DETAIL 868	6- B5-107	VOID
6-AB5- 30	DETAIL 832	6-AB5- 67	DETAIL 869	6- B5-108	VOID
6-AB5- 30.1	DETAIL 832	6-AB5- 68	DETAIL 870	6- B5-109	TEMP BRACING DE
6-AB5- 31	DETAIL 833	6-AB5- 69	DETAIL 871	6- B5-110	TEMP BRACING DE
6-AB5- 31.1	DETAIL 833	6-AB5- 70	DETAIL 872	6- B5-111	TEMP BRACING DE
6-AB5- 32	DETAIL 834	6-AB5- 71	DETAIL 873	6- B5-112	TEMP BRACING DE
6-AB5- 32.1	DETAIL 834	6-AB5- 72	DETAIL 874	6- B5-113	TEMP BRACING DE
6-AB5- 33	DETAIL 835	6-AB5- 73	DETAIL 875		
6-AB5- 34	DETAIL 836	6-AB5- 74	DETAIL 876		
6-AB5- 35	DETAIL 837	6-AB5- 75	DETAIL 877		
6-AB5- 36	DETAIL 838	6-AB5- 76	DETAIL 878		
6-AB5- 37	DETAIL 839	6-AB5- 77	DETAIL 879		
6-AB5- 38	DETAIL 840	6-AB5- 77.1	DETAIL 879		
6-AB5- 39	DETAIL 841	6-AB5- 78	DETAIL 880		

LICENSED PROFESSIONAL ENGINEER — LESLIE E. ROBERTSON — No. 34360 — UNIVERSITY OF THE STATE OF NEW YORK

87

WORTHINGTON, SKILLING, HELLE & JACKSON — Civil & Structural Engineers

PROJECT: THE WORLD TRADE CENTER | TITLE: BRACING - SECTION A-A | DATE: 6-19-67

REVISIONS
8-14-67
9-29-67

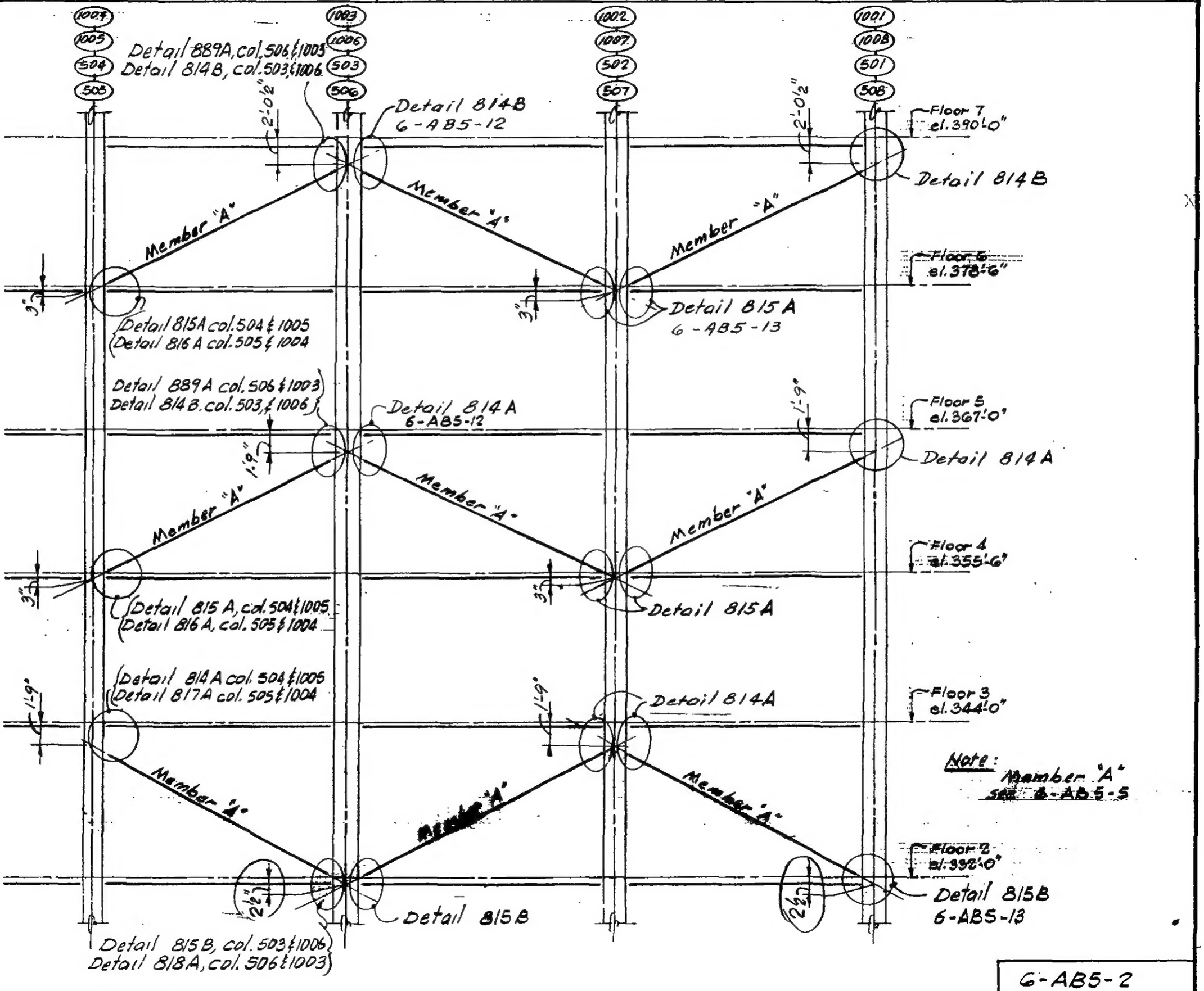

LICENSED PROFESSIONAL ENGINEER
LESLIE E. ROBERTSON
No. 34360
UNIVERSITY OF THE STATE OF NEW YORK

6-AB5-2

WORTHINGTON, SKILLING, HELLE & JACKSON — Civil & Structural Engineers

PROJECT: THE WORLD TRADE CENTER | TITLE: BRACING SECTION B-B | DATE: 6-19-67

REVISIONS
8-14-67
3-13-68

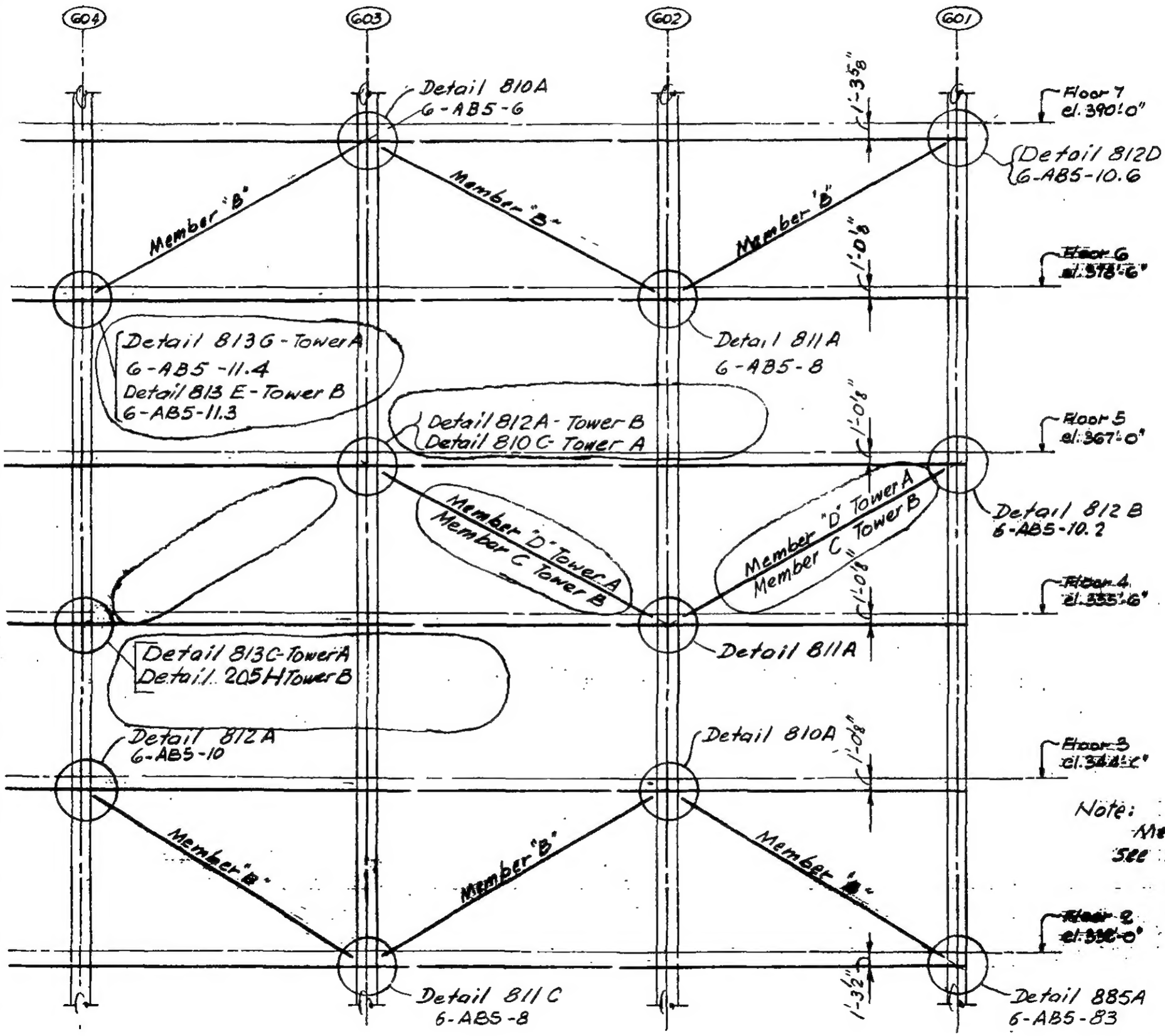

LEONARD E. ROBERTSON
No. 34866
STATE OF NEW YORK

6-ABS-3

SKILLING - HELLE - CHRISTIANSEN - ROBERTSON Structural & Civil Engineers

PROJECT THE WORLD TRADE CENTER | TITLE BRACING SECTION B-B | DATE 3-13-68

REVISIONS

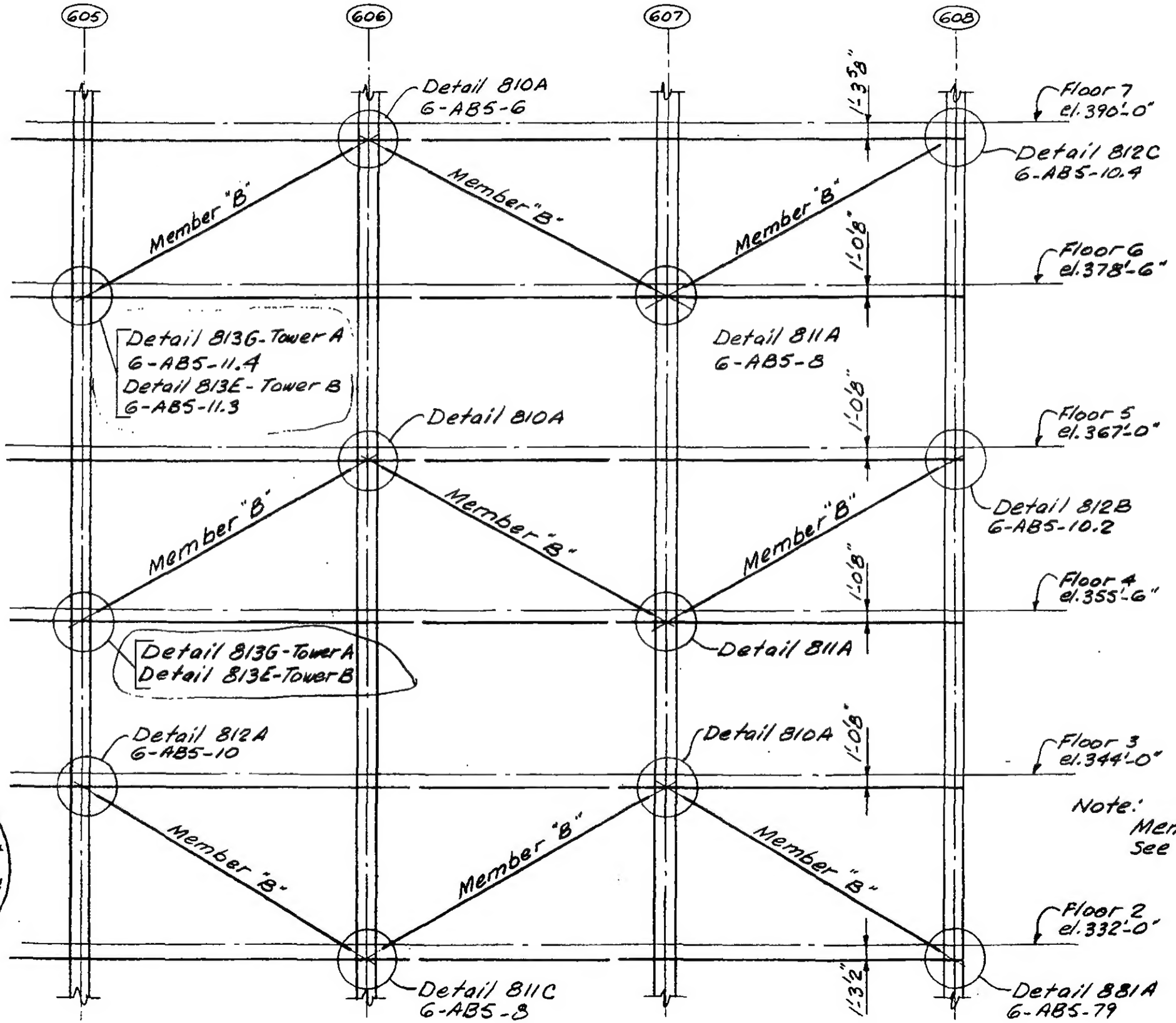

LICENSED PROFESSIONAL ENGINEER
LESLIE E. ROBERTSON
No. 34360
UNIVERSITY OF THE STATE OF NEW YORK

6-AB5-3.1

WORTHINGTON, SKILLING, HELLE & JACKSON — Civil & Structural Engineers

PROJECT: THE WORLD TRADE CENTER | TITLE: BRACING SECTION C-C | DATE: 6-19-67

REVISIONS
8-14-67
10-31-67
3-13-68

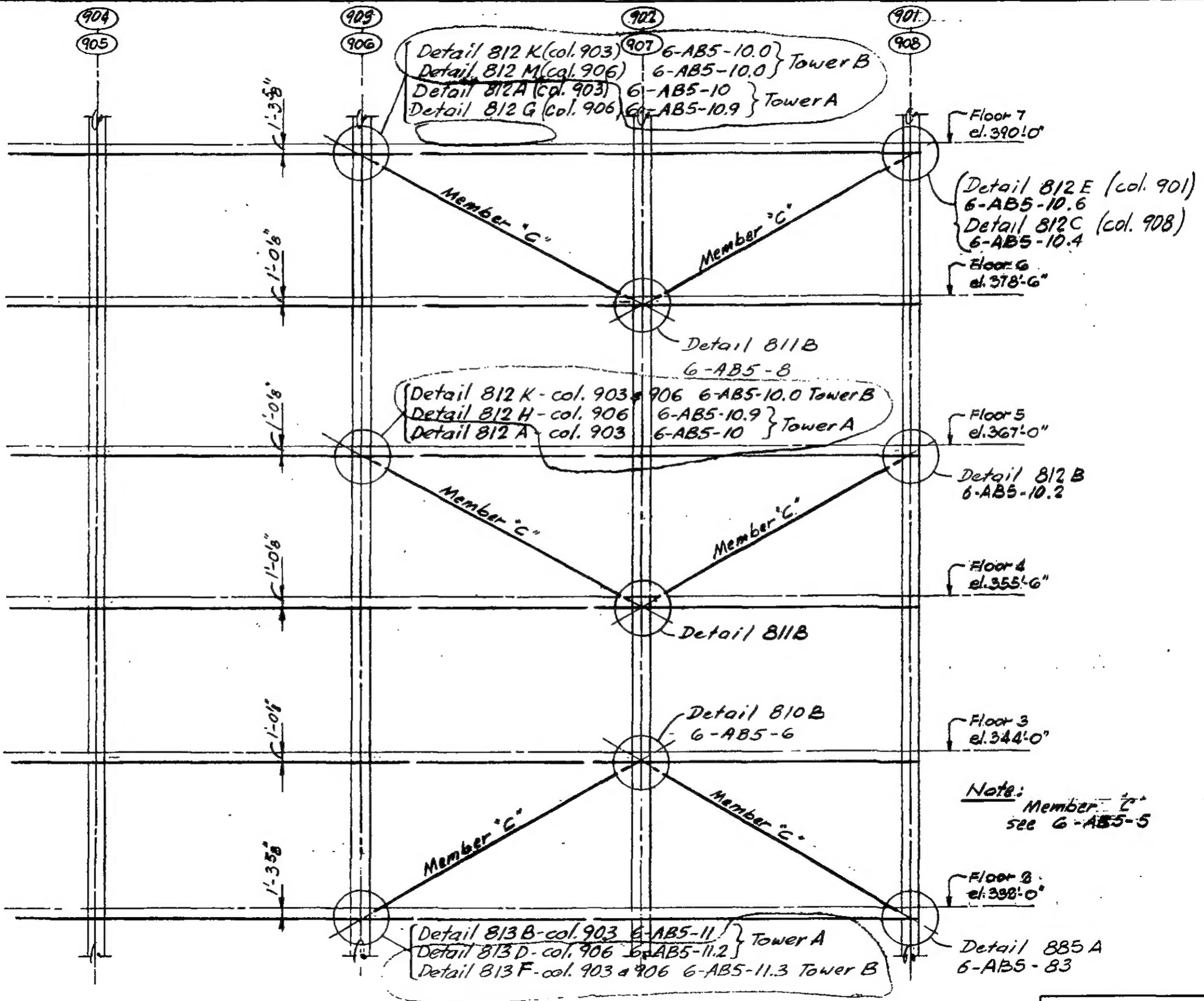

LICENSED PROFESSIONAL ENGINEER
LESLIE E. ROBERTSON
No. 34360
UNIVERSITY OF THE STATE OF NEW YORK

6-ABS-4

WORTHINGTON, SKILLING, HELLE & JACKSON — Civil & Structural Engineers

PROJECT: THE WORLD TRADE CENTER | TITLE: BRACING MEMBERS A, B, C & D | DATE: 6-19-67

REVISIONS
8-14-67
3-13-68

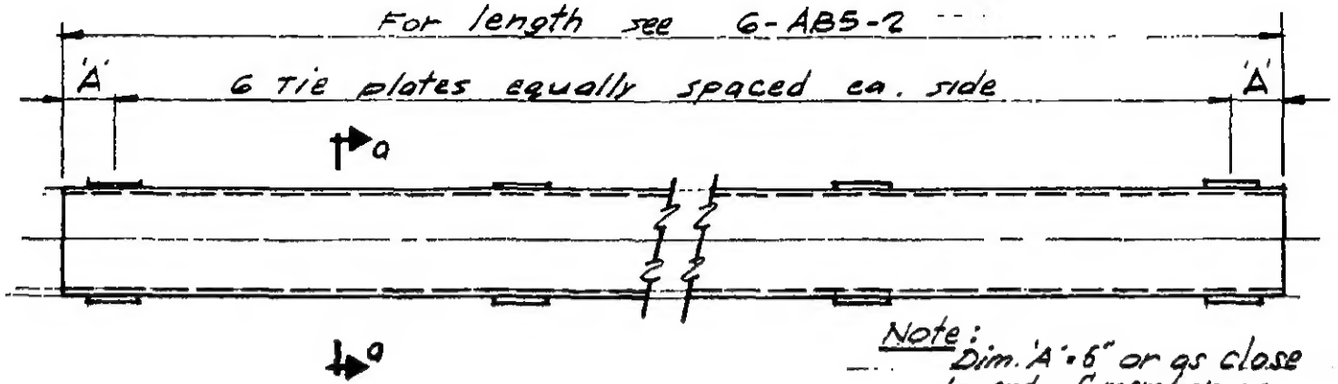

Note: Dim. 'A' - 6" or as close to end of member as permitted by column connection

MEMBER "A"

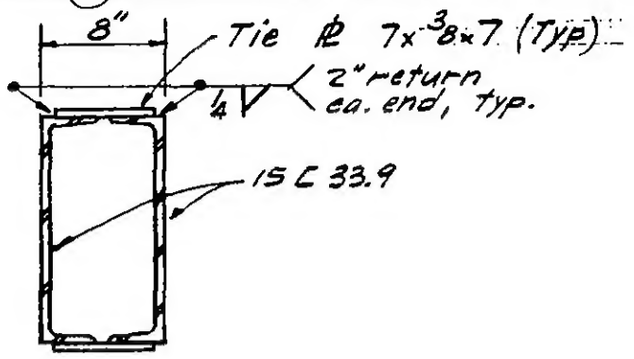

SECTION a-a

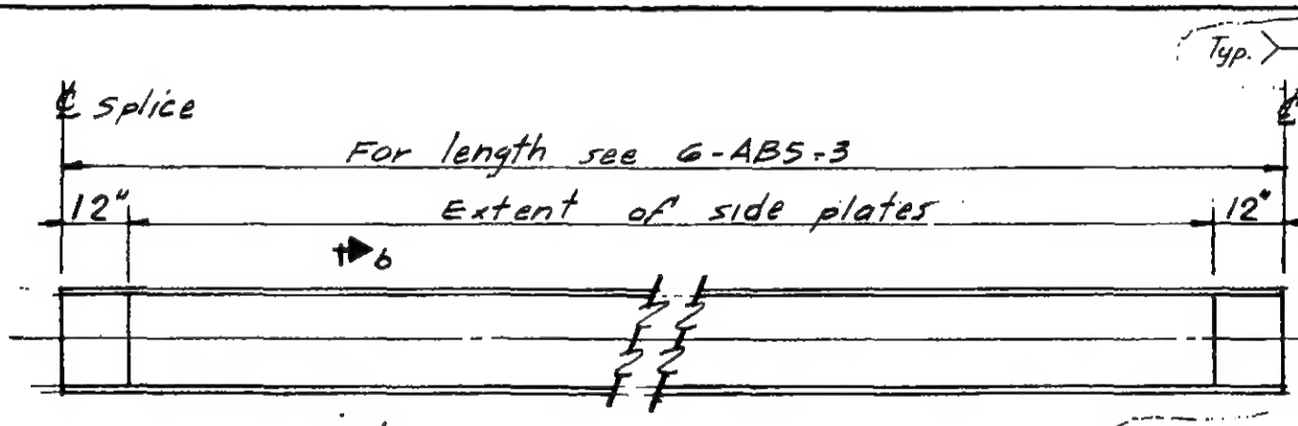

MEMBER B & D"

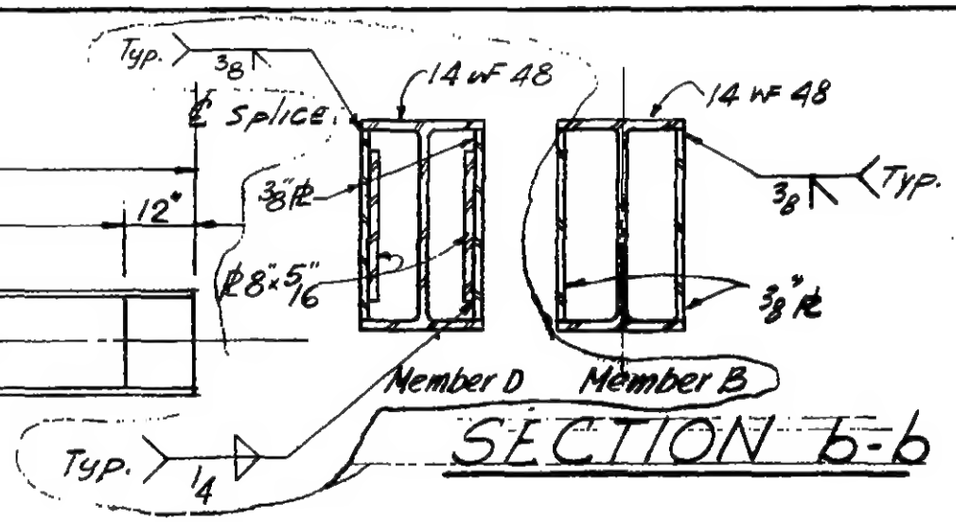

SECTION b-b

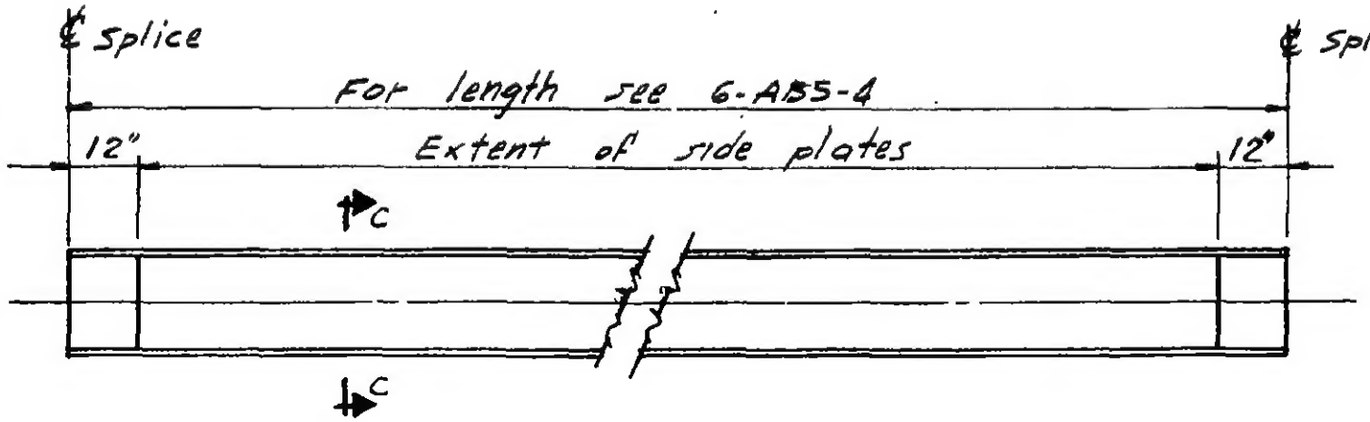

MEMBER "C"

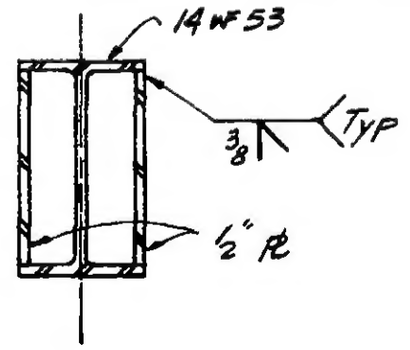

SECTION c-c

LICENSED PROFESSIONAL ENGINEER
LESLIE E. ROBERTSON
No. 34360
UNIVERSITY OF THE STATE OF NEW YORK

WORTHINGTON, SKILLING, HELLE & JACKSON — Civil & Structural Engineers

PROJECT THE WORLD TRADE CENTER | TITLE VERTICAL BRACING DETAIL 810A & 810B | DATE 6-19-67

REVISIONS

8-14-67

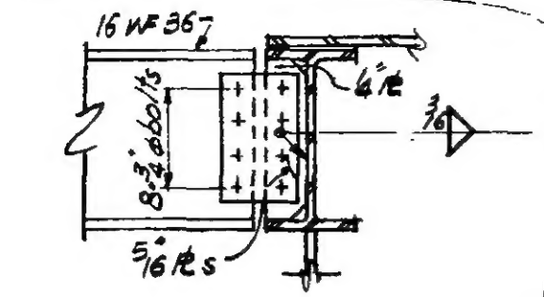

SECTION h-h
(DETAIL 810 B only)

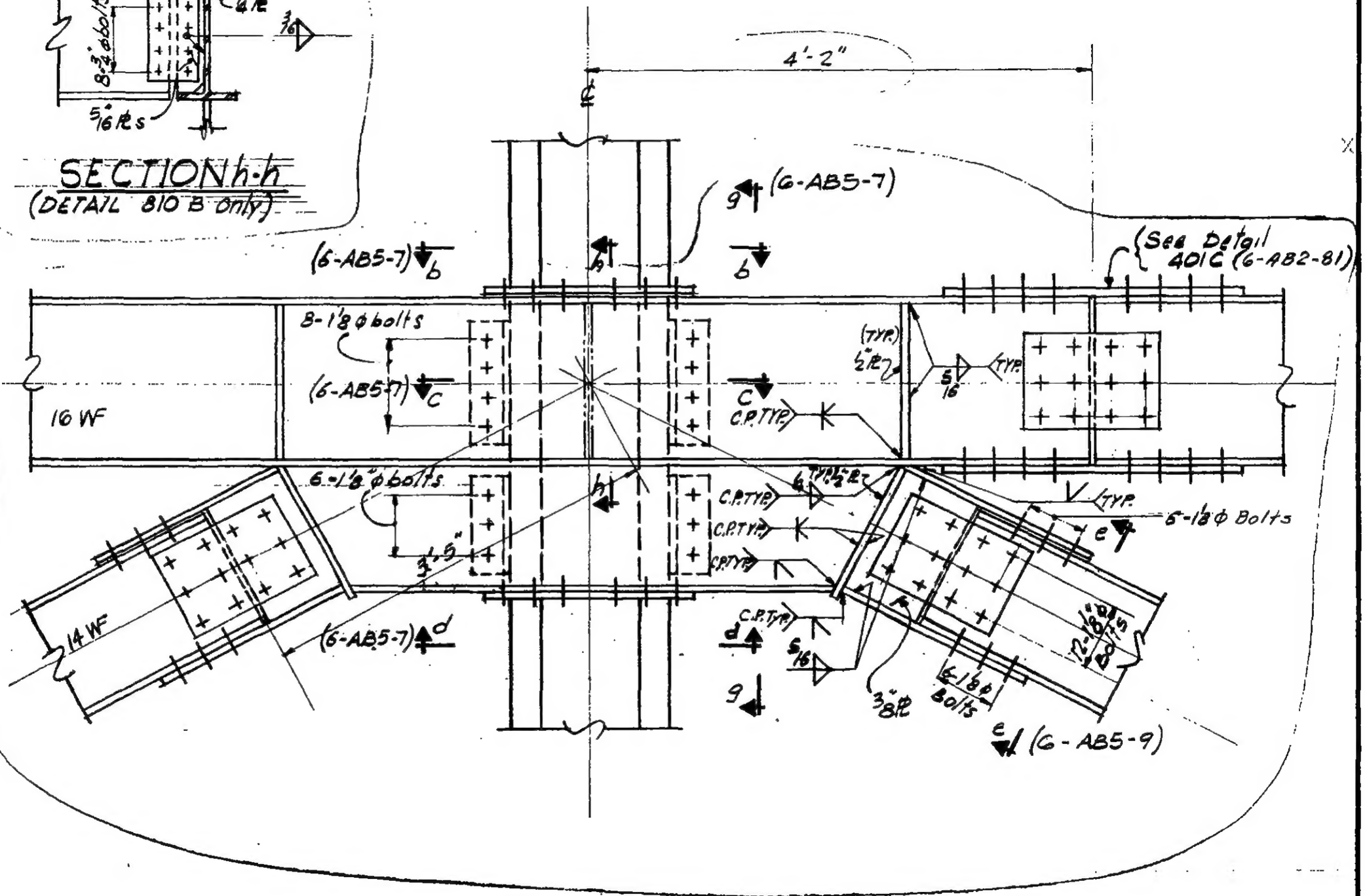

REGISTERED PROFESSIONAL ENGINEER
LESLIE E. ROBERTSON
No. 34360
UNIVERSITY OF THE STATE OF NEW YORK

6-AB5-6

WORTHINGTON, SKILLING, HELLE & JACKSON — Civil & Structural Engineers

PROJECT	TITLE	DATE
THE WORLD TRADE CENTER	VERTICAL BRACING DETAIL 810C	3-13-68

VISIONS

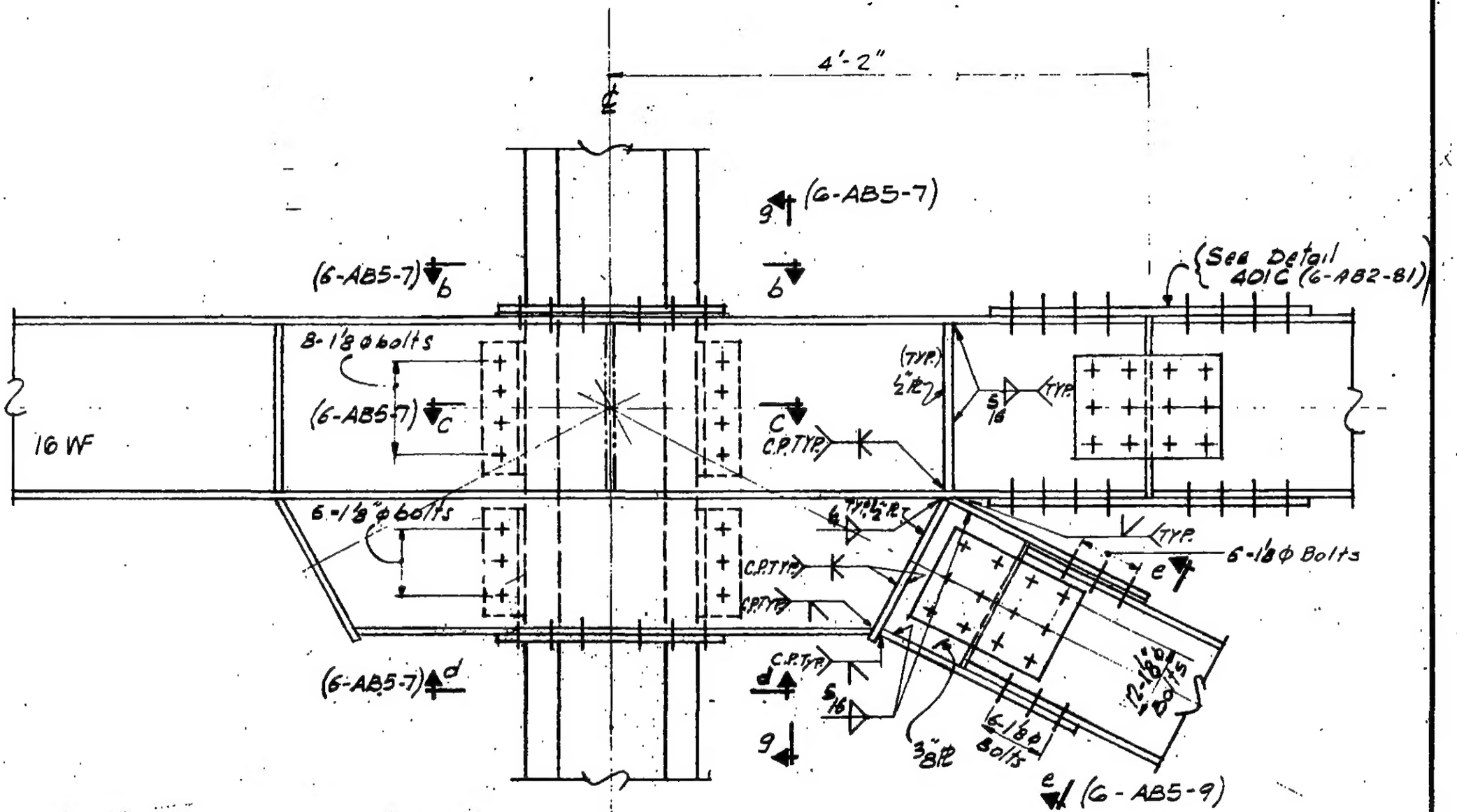

Detail 810C is at Col. 603, Floor 5, Tower A, and was formerly detail 810A.

Circled area indicates portion revised.

LESLIE E. ROBERTSON — REGISTERED PROFESSIONAL ENGINEER — No. 34360 — STATE OF NEW YORK

6-AB5-6.1

WORTHINGTON, SKILLING, HELLE & JACKSON — Civil & Structural Engineers

PROJECT: THE WORLD TRADE CENTER | TITLE: SECTION DETAILS B10A, B10B, B11A, B11B, B11C, B12A, B12Q | DATE: 6-19-67

REVISIONS

8-14-67

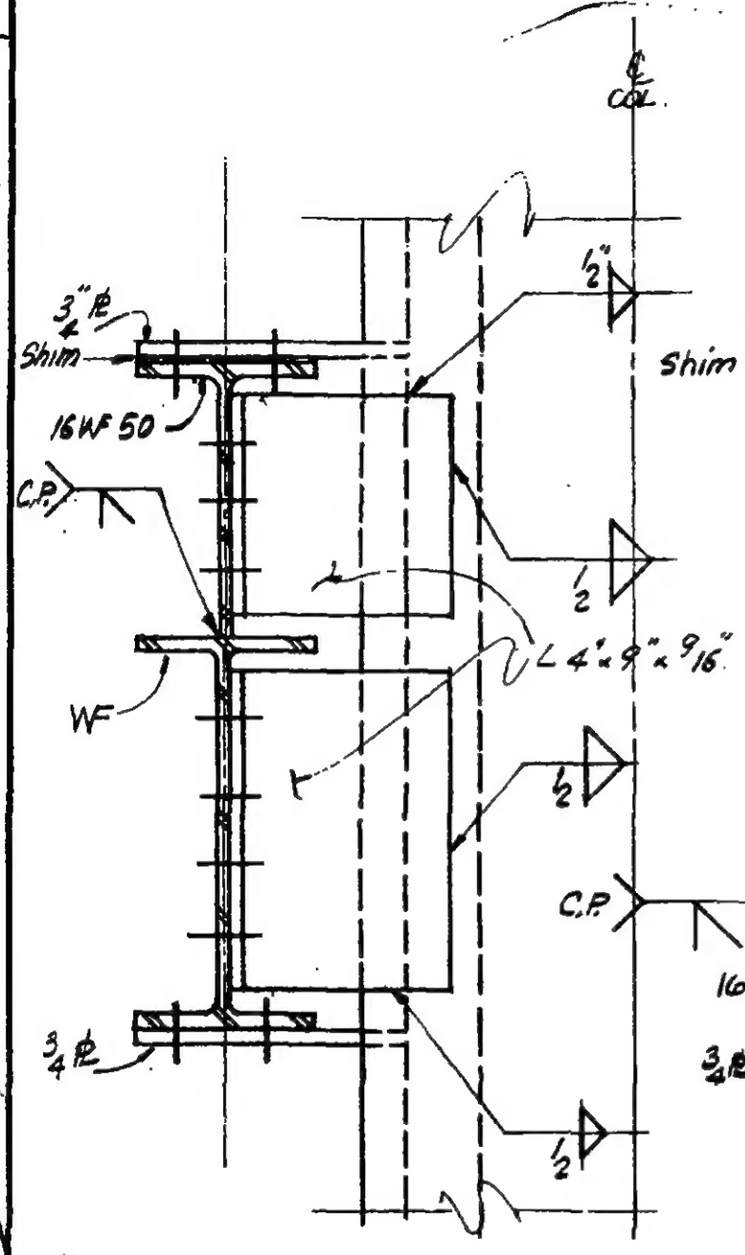

SECTION a-a

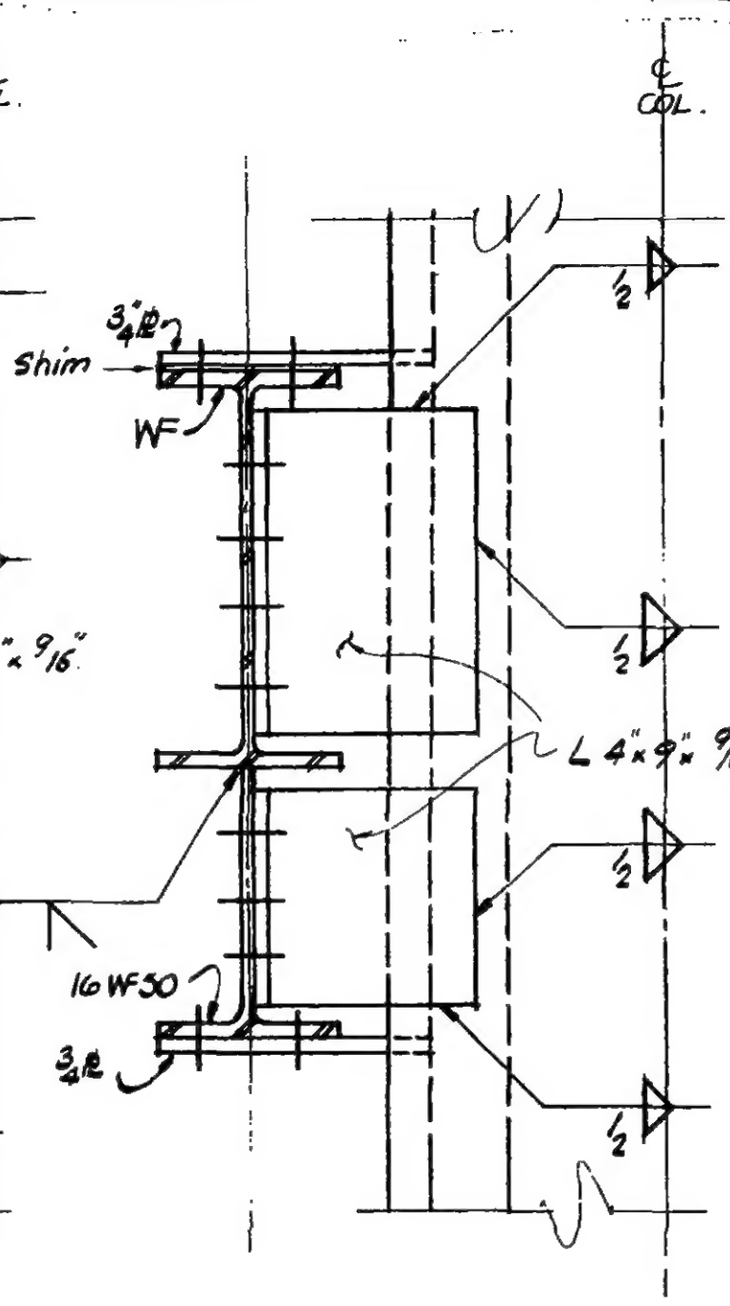

SECTION g-g

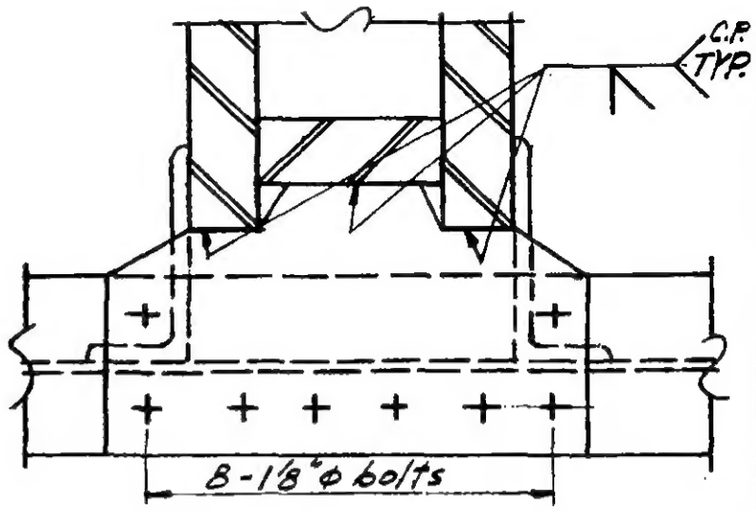

SECTION b-b
(SECTION d-d Similar)

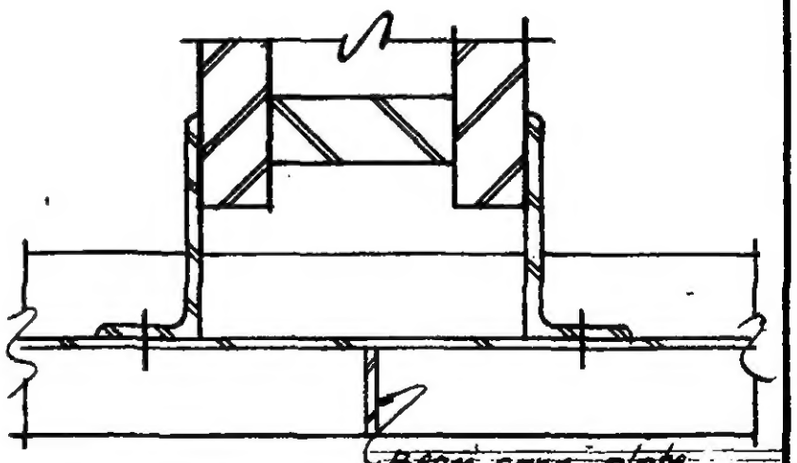

SECTION c-c

LICENSED PROFESSIONAL ENGINEER
LESLIE E. ROBERTSON
No. 34360
STATE OF NEW YORK

G-AB5-7

SKILLING - HELLE - CHRISTIANSEN - ROBERTSON Structural & Civil Engineers

PROJECT THE WORLD TRADE CENTER | TITLE VERTICAL BRACING DETAIL 812 G, H, K & M | DATE 3-13-68

REVISIONS

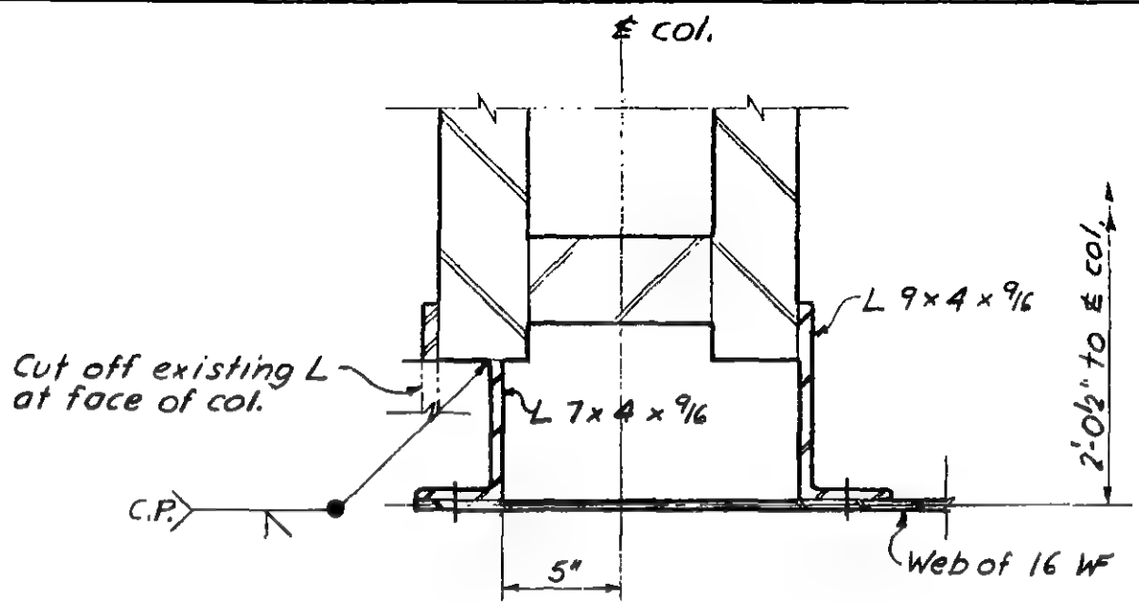

Section e-e

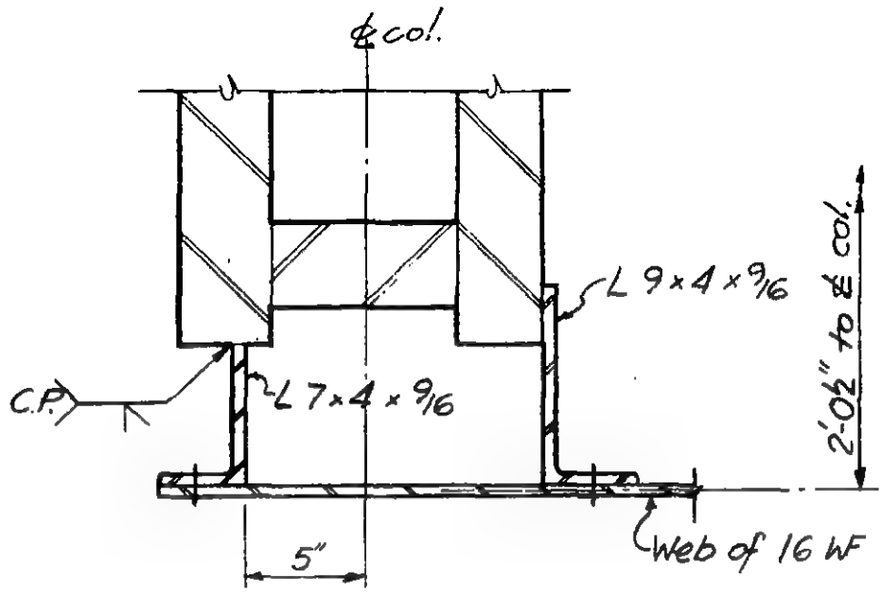

Section e-e

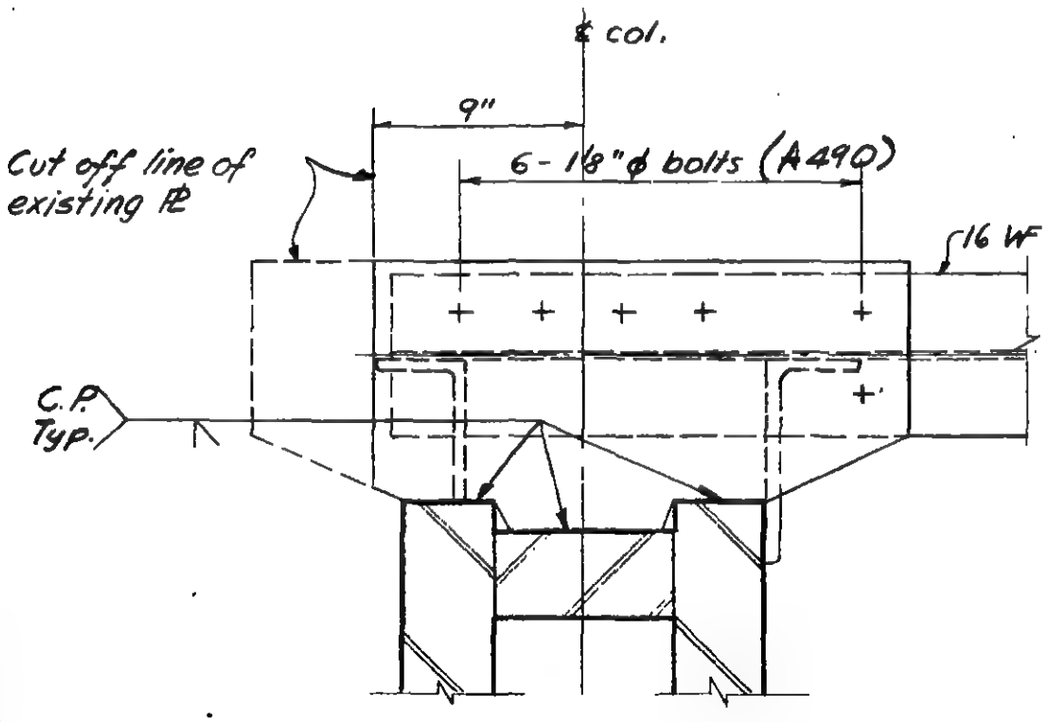

Section d-d

Detail 812 H & G

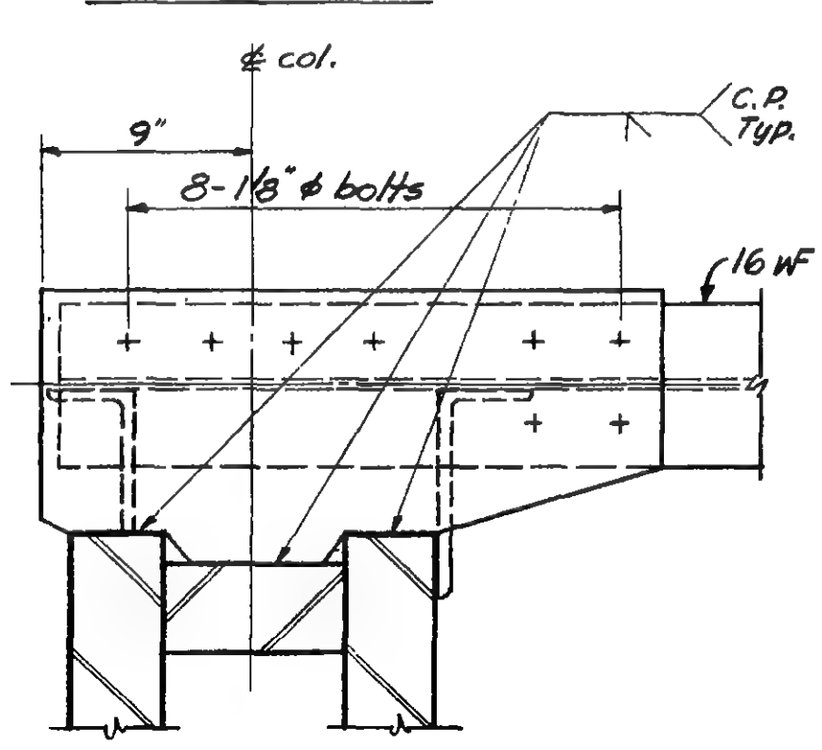

Section d-d

Detail 812 K & M

LICENSED PROFESSIONAL ENGINEER LESLIE E. ROBERTSON No. 34360 UNIVERSITY OF THE STATE OF NEW YORK

6-AB5-7.1

SKILLING - HELLE - CHRISTIANSEN - ROBERTSON — Structural & Civil Engineers

PROJECT THE WORLD TRADE CENTER | TITLE VERTICAL BRACING DETAIL 813 D, E & F | DATE 3-13-68

REVISIONS

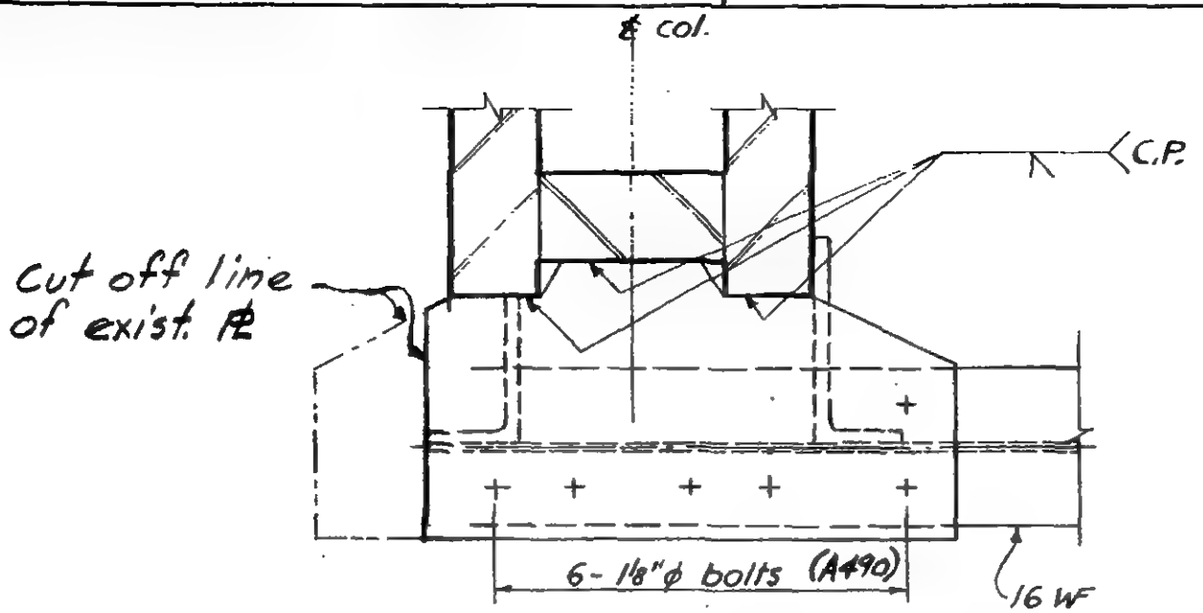

Section d-d

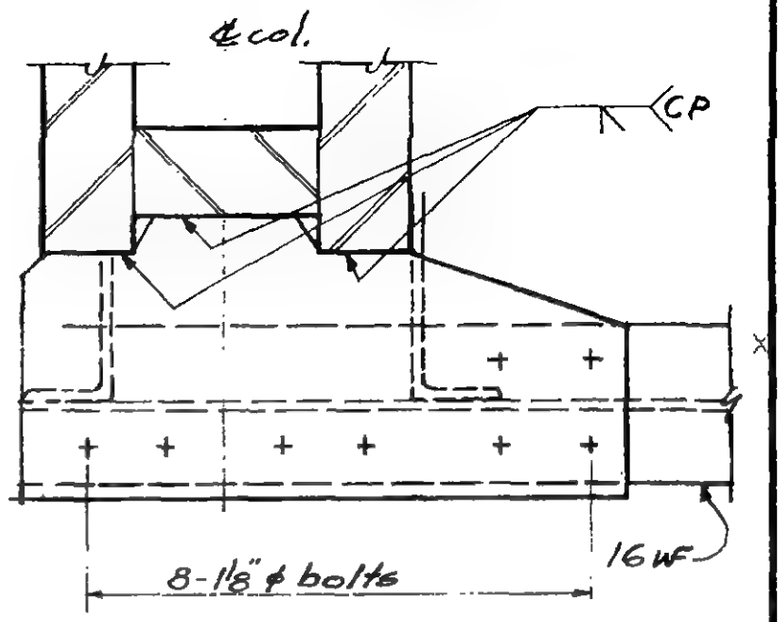

Section d-d

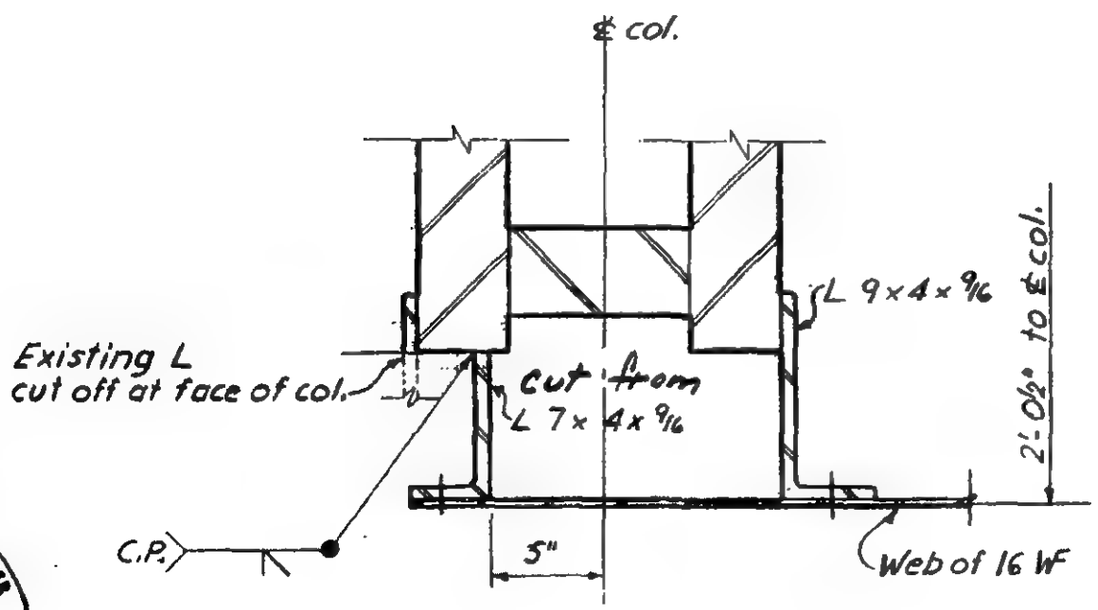

Section e-e

Detail 813 D

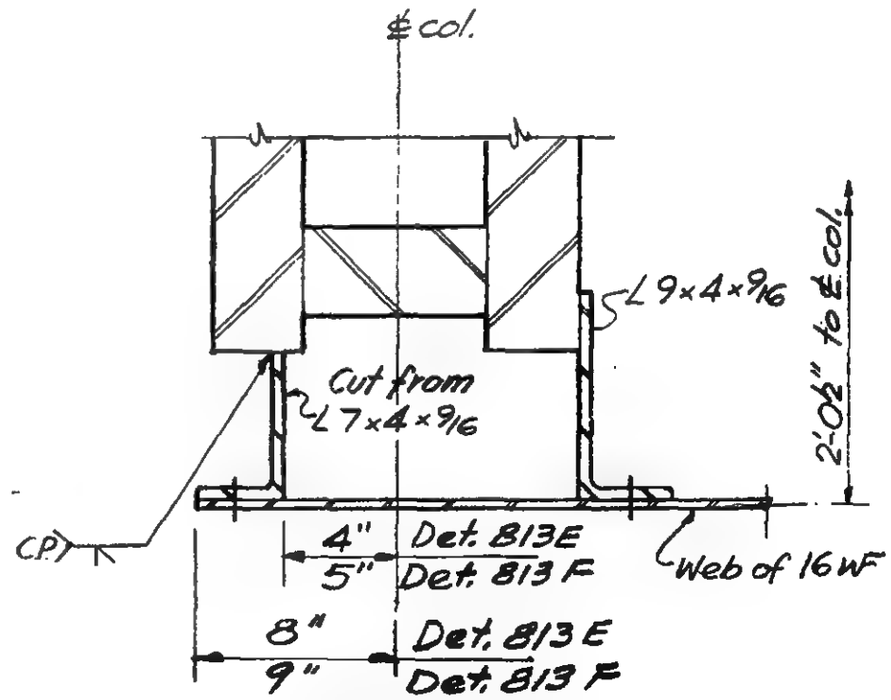

Section e-e

Detail 813 E & F

LICENSED PROFESSIONAL ENGINEER LESLIE E. ROBERTSON No. 34360 UNIVERSITY OF THE STATE OF NEW YORK

6-AB5-7.2

SKILLING - HELLE - CHRISTIANSEN - ROBERTSON Structural & Civil Engineers

PROJECT THE WORLD TRADE CENTER | TITLE VERTICAL BRACING DETAIL 813G | DATE 3-13-68

REVISIONS

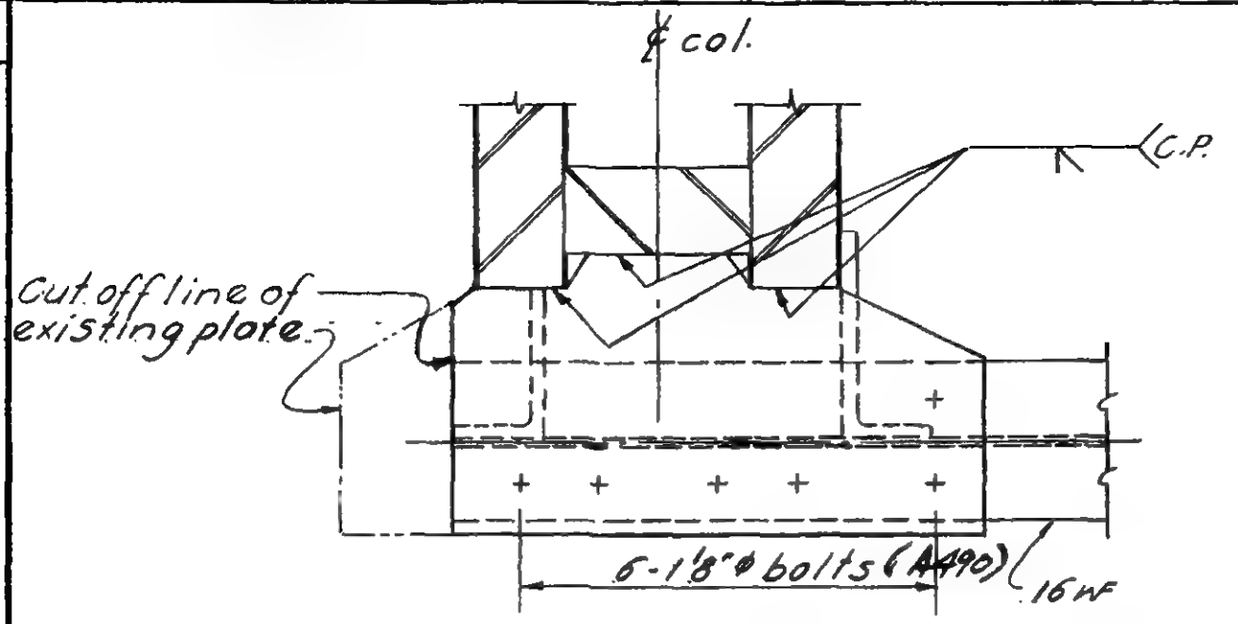

Section d-d

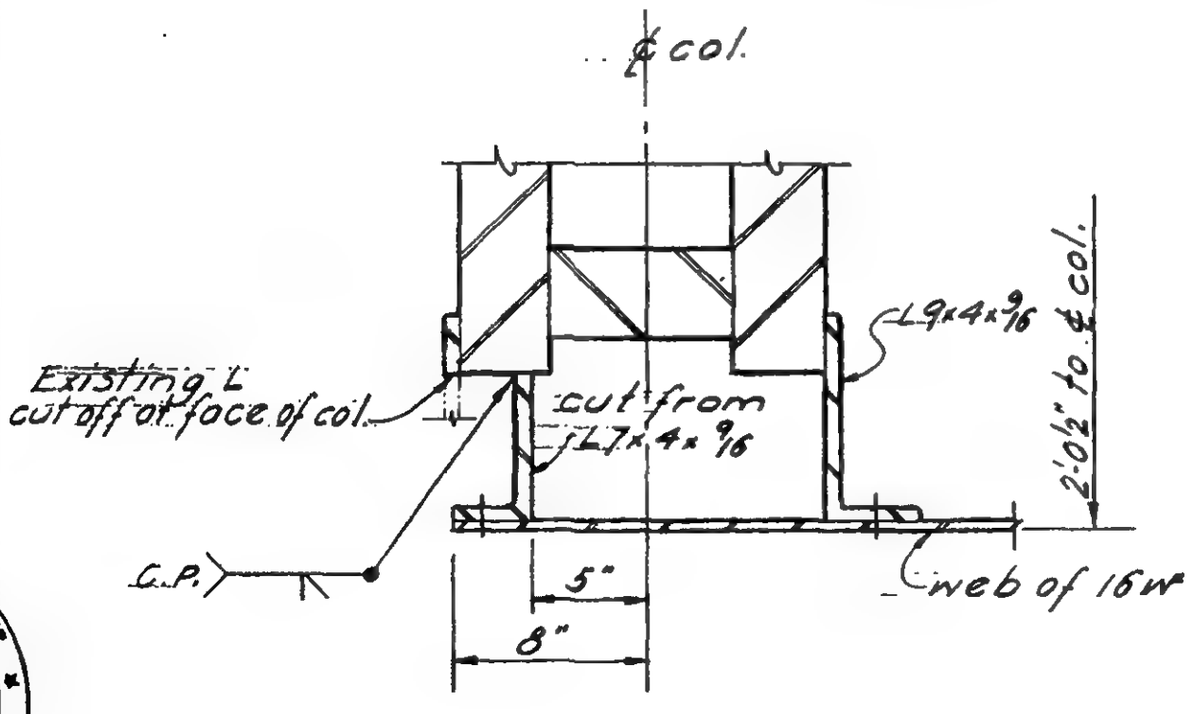

Section e-e

Detail 813G

LICENSED PROFESSIONAL ENGINEER LESLIE E. ROBERTSON No. 34360 UNIVERSITY OF THE STATE OF NEW YORK

6-AB5-7.3

WORTHINGTON, SKILLING, HELLE & JACKSON — Civil & Structural Engineers

PROJECT: THE WORLD TRADE CENTER | TITLE: VERTICAL BRACING DETAIL 811A, 811B & 811C | DATE: 6-19-67

REVISIONS

8-14-67

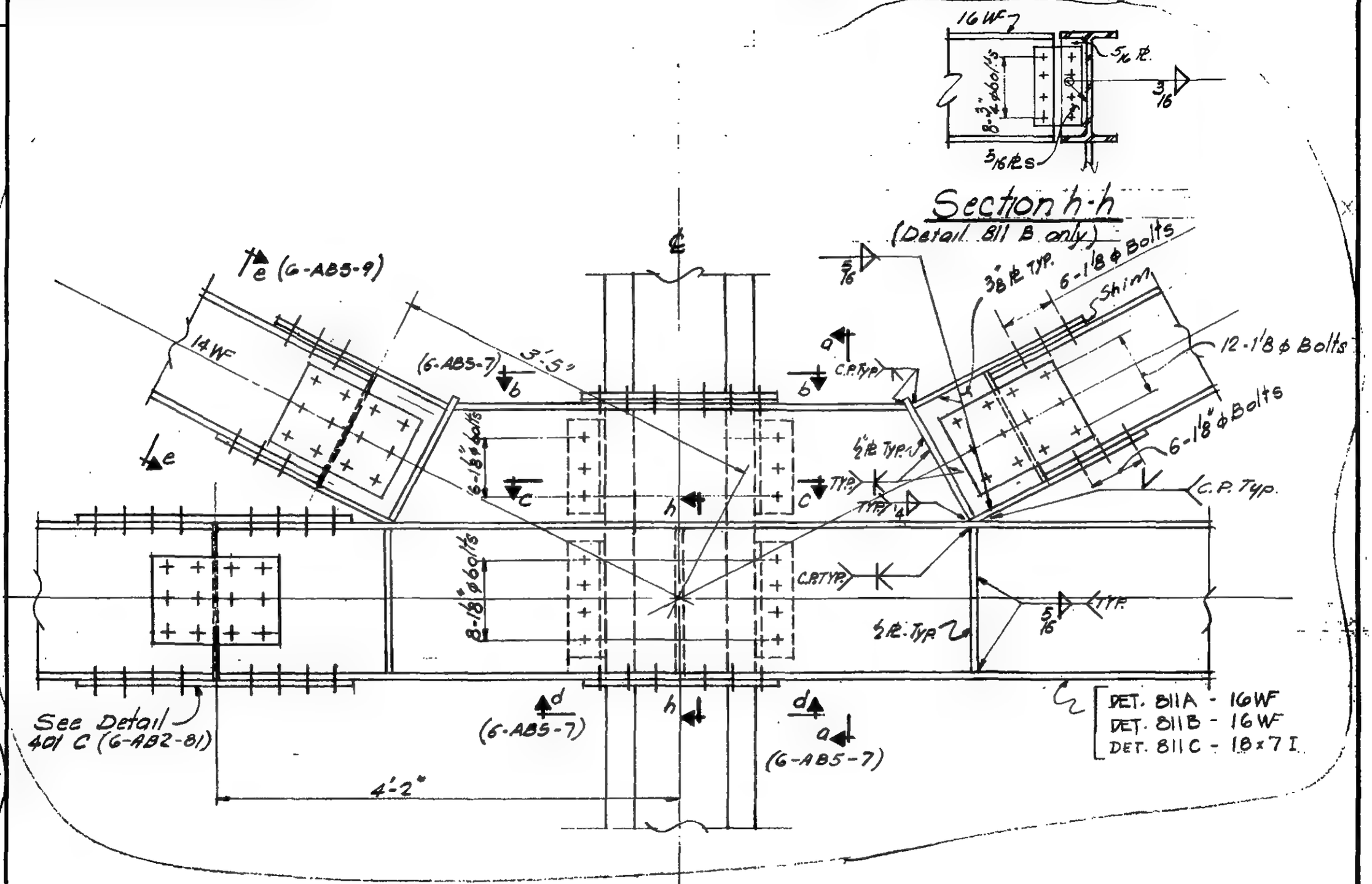

LICENSED PROFESSIONAL ENG'INEER
LESLIE E. ROBERTSON
No. 34360
UNIVERSITY OF THE STATE OF NEW YORK

6-AB5-8

WORTHINGTON, SKILLING, HELLE & JACKSON — Civil & Structural Engineers

PROJECT THE WORLD TRADE CENTER | TITLE SECTION - DETAILS (810A, 810B, 811A, 811B, 811C, 812A, 812C) | DATE 6-19-67

REVISIONS

8-14-67

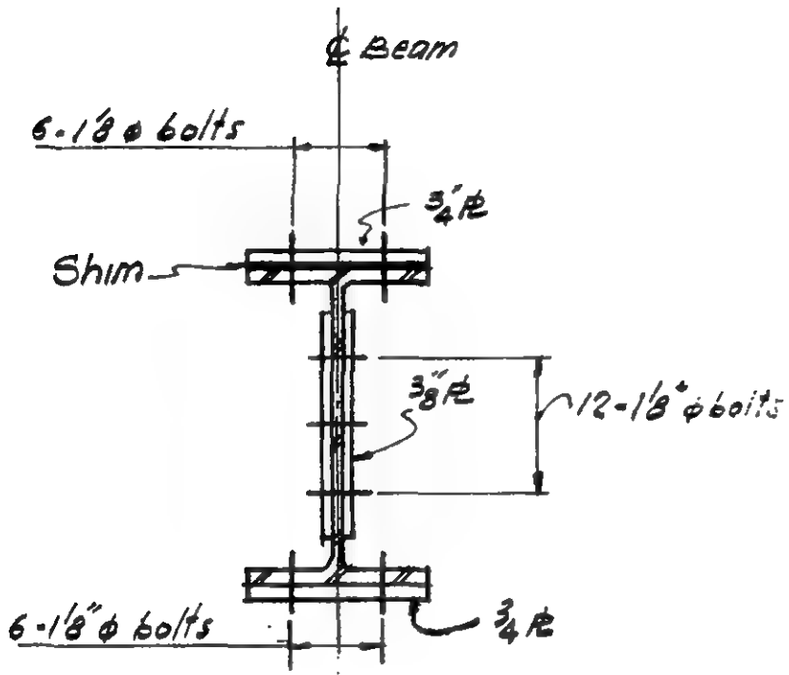

SECTION e-e

LICENSED PROFESSIONAL ENGINEER
LESLIE E. ROBERTSON
No. 34360
UNIVERSITY OF THE STATE OF NEW YORK

G-AB5-9

WORTHINGTON, SKILLING, HELLE & JACKSON — Civil & Structural Engineers

PROJECT	TITLE	DATE
THE WORLD TRADE CENTER	VERTICAL BRACING DETAIL 812 A	6-19-67

EVISIONS

8-14-67
3-13-68

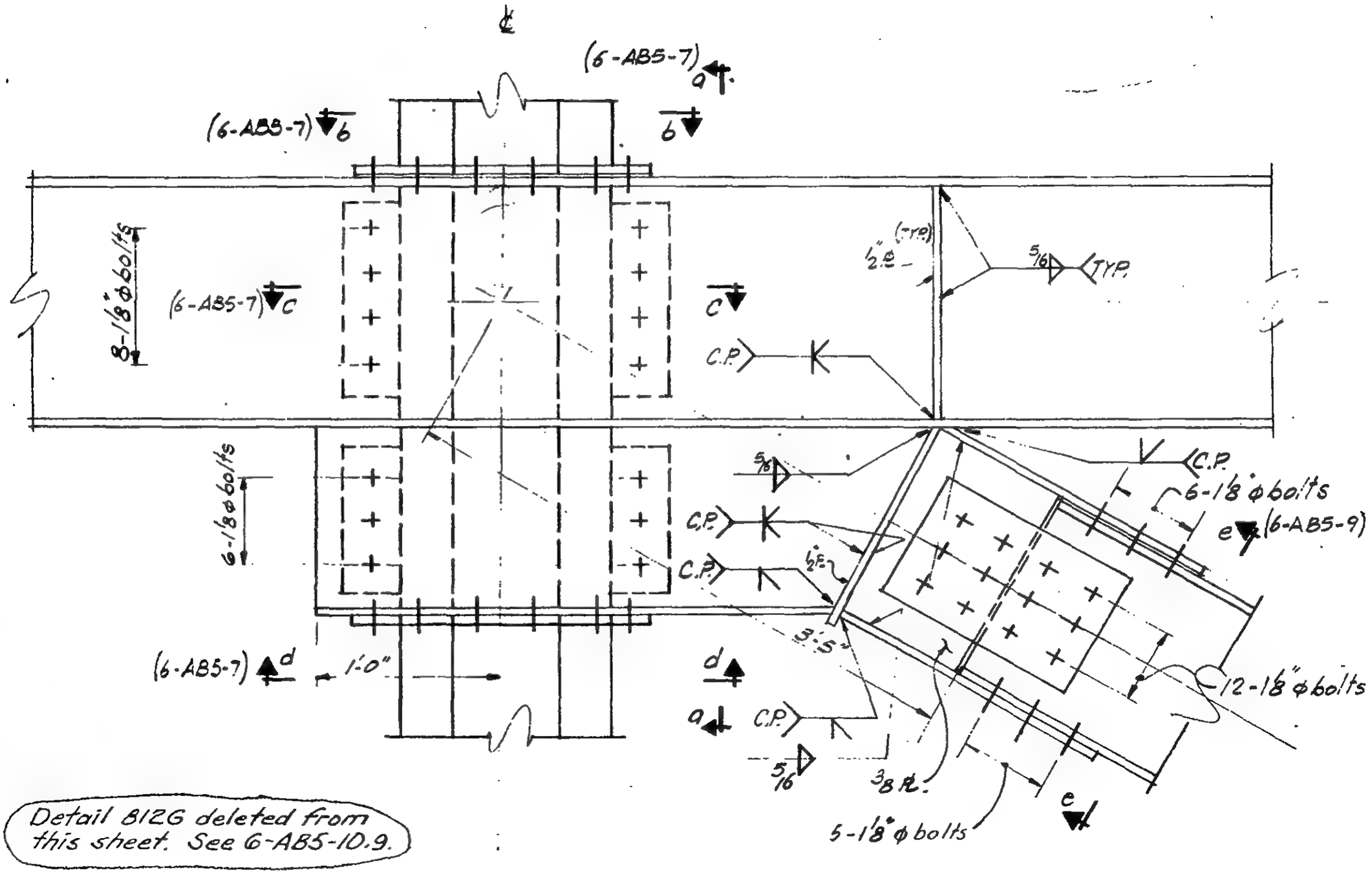

Detail 812G deleted from this sheet. See 6-AB5-10.9.

LICENSED PROFESSIONAL ENGINEER
LESLIE E. ROBERTSON
No. 34360
UNIVERSITY OF THE STATE OF NEW YORK

6-AB5-10

WORTHINGTON, SKILLING, HELLE & JACKSON — Civil & Structural Engineers

PROJECT: THE WORLD TRADE CENTER | TITLE: CONNECTION DETAIL B12B | DATE: 8-14-67

REVISIONS

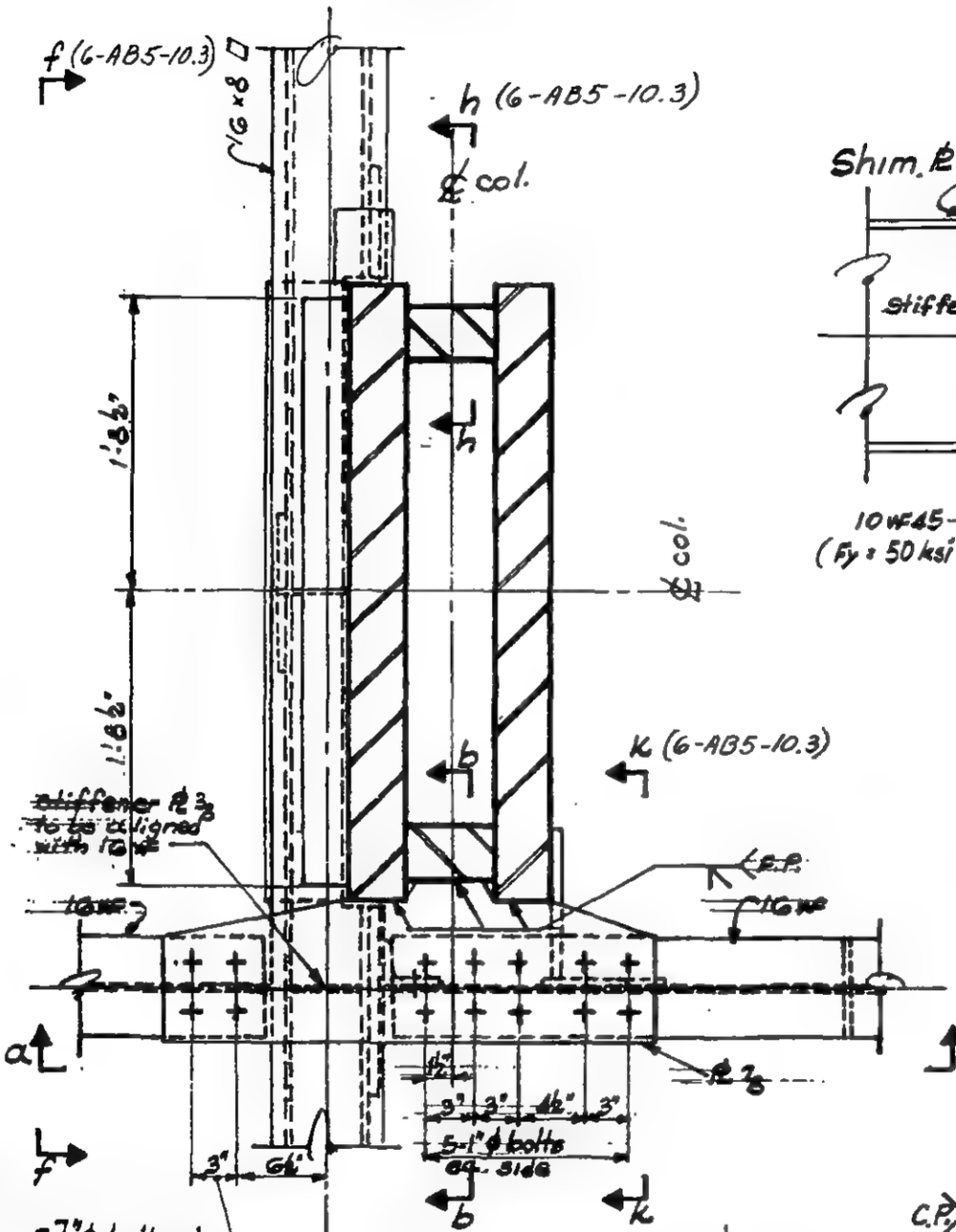

PLAN

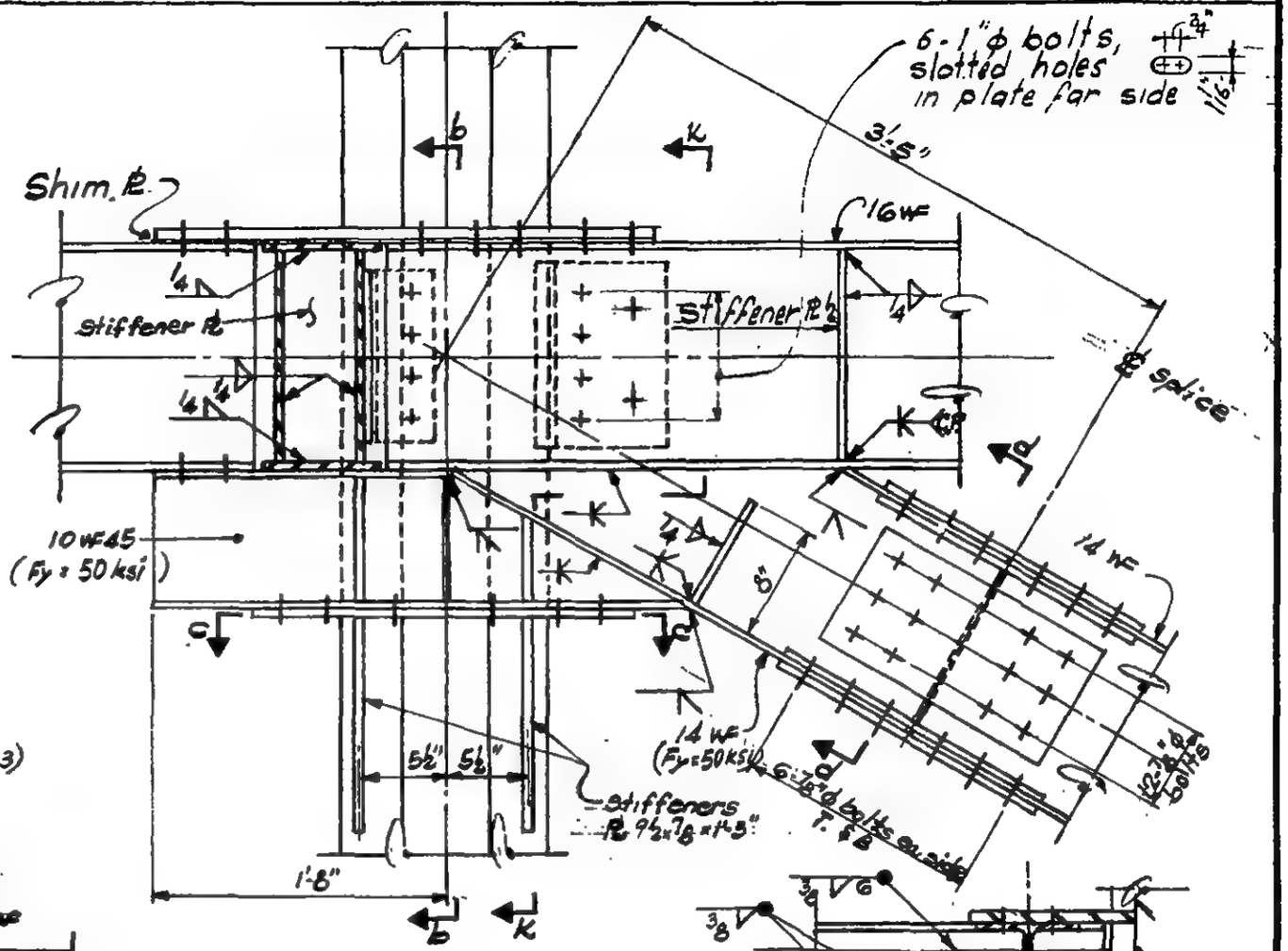

Section a-a

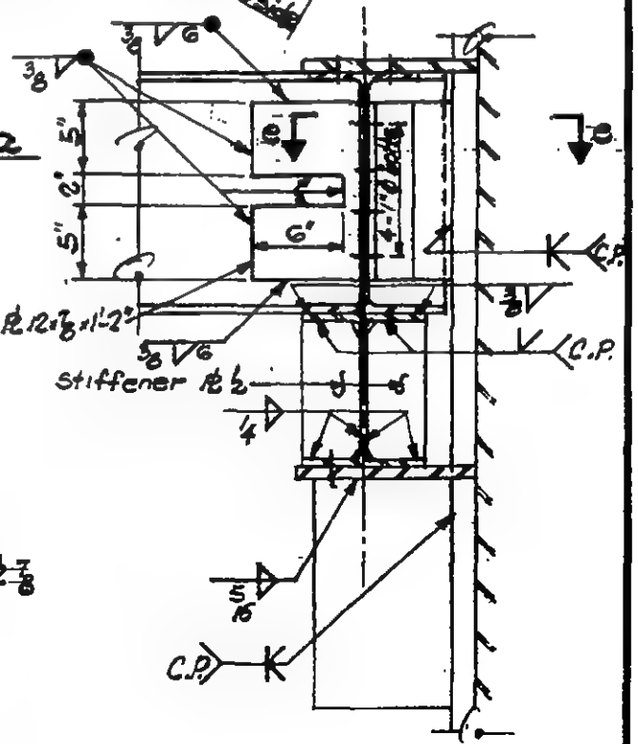

Section b-b

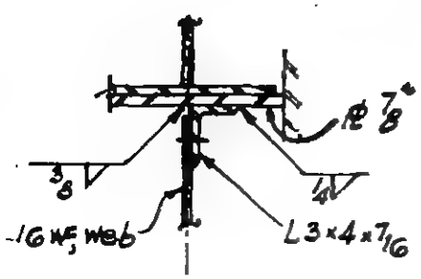

Section e-e

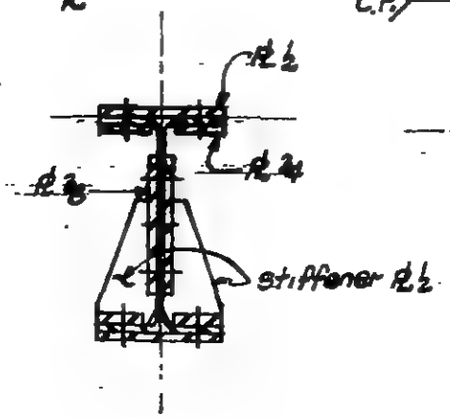

Section d-d

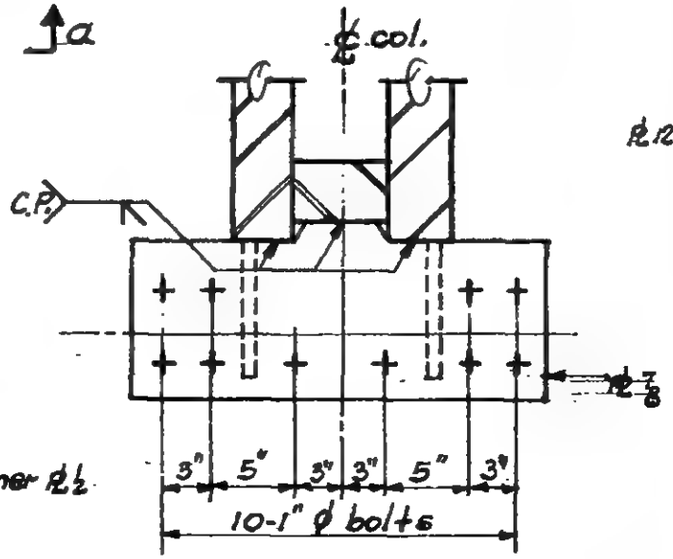

Section c-c

6-AB5-10.2

LICENSED PROFESSIONAL ENGINEER — LESLIE E. ROBERTSON — No. 34360 — UNIVERSITY OF THE STATE OF NEW YORK

WORTHINGTON, SKILLING, HELLE & JACKSON — Civil & Structural Engineers

PROJECT: THE WORLD TRADE CENTER | TITLE: CONNECTION DETAIL B12B | DATE: 8-14-67

REVISIONS

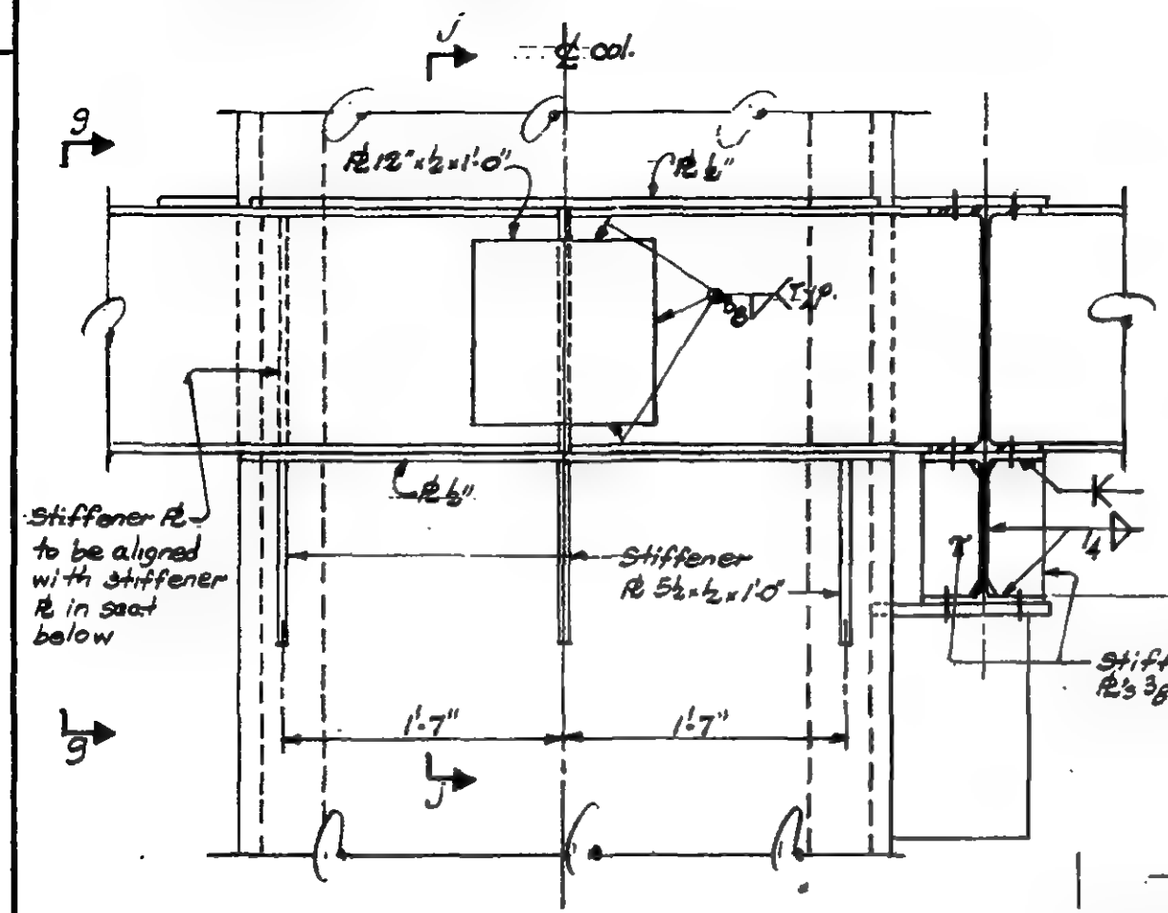

Section f-f

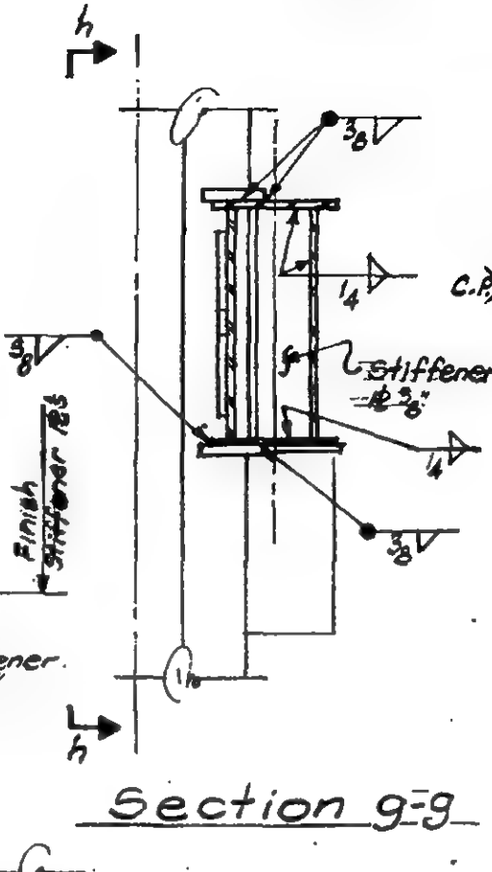

Section g-g

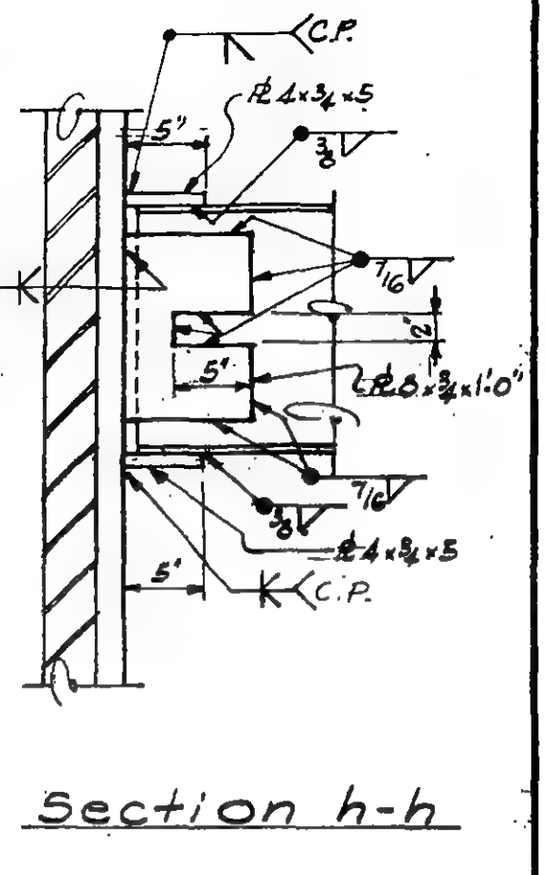

Section h-h

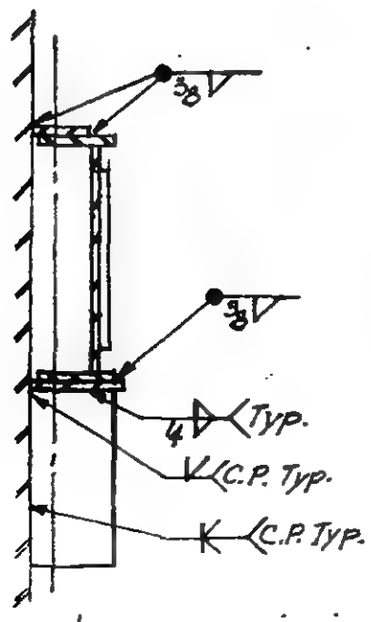

Section j-j

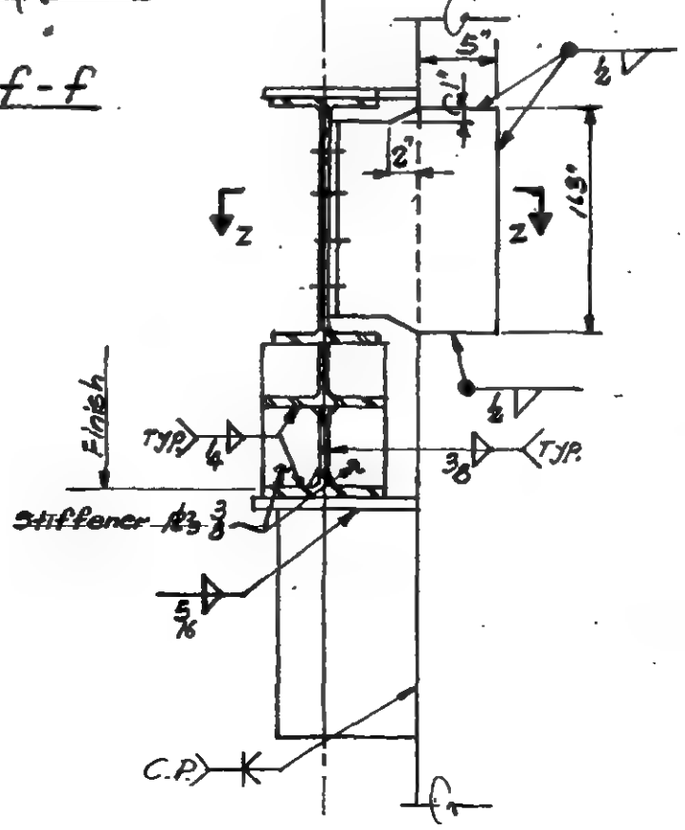

Section k-k

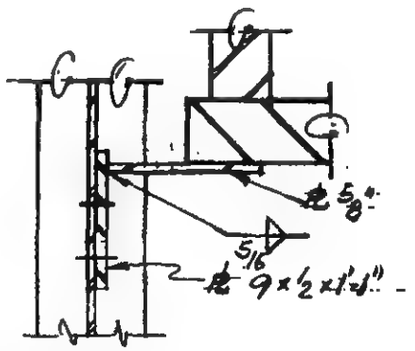

Section z-z

LICENSED PROFESSIONAL ENGINEER — LESLIE E. ROBERTSON — No. 34360 — UNIVERSITY OF THE STATE OF NEW YORK

6-AB5-10.3

WORTHINGTON, SKILLING, HELLE & JACKSON — Civil & Structural Engineers

PROJECT THE WORLD TRADE CENTER | TITLE CONNECTION DETAIL 812 C | DATE 8-14-67

REVISIONS

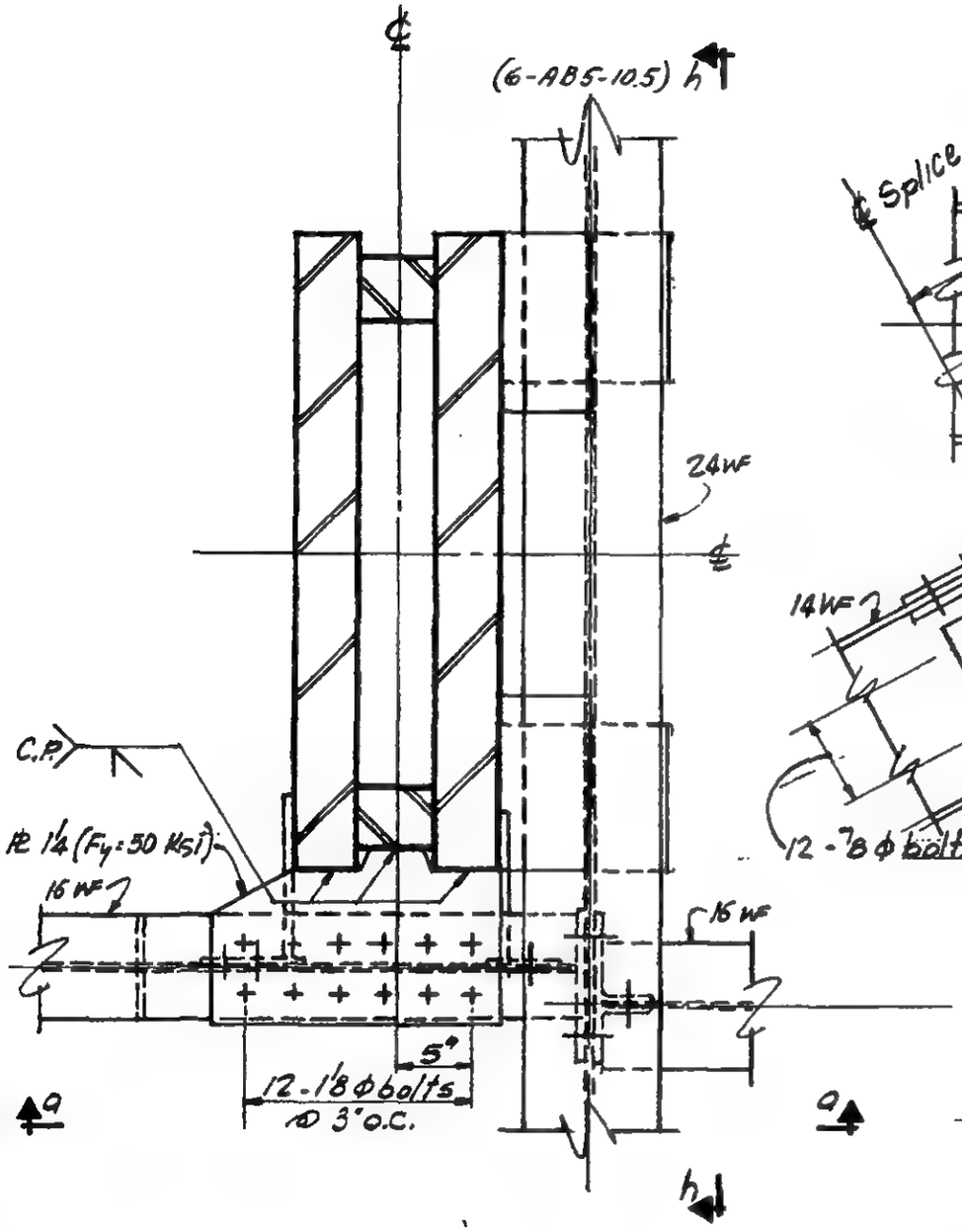

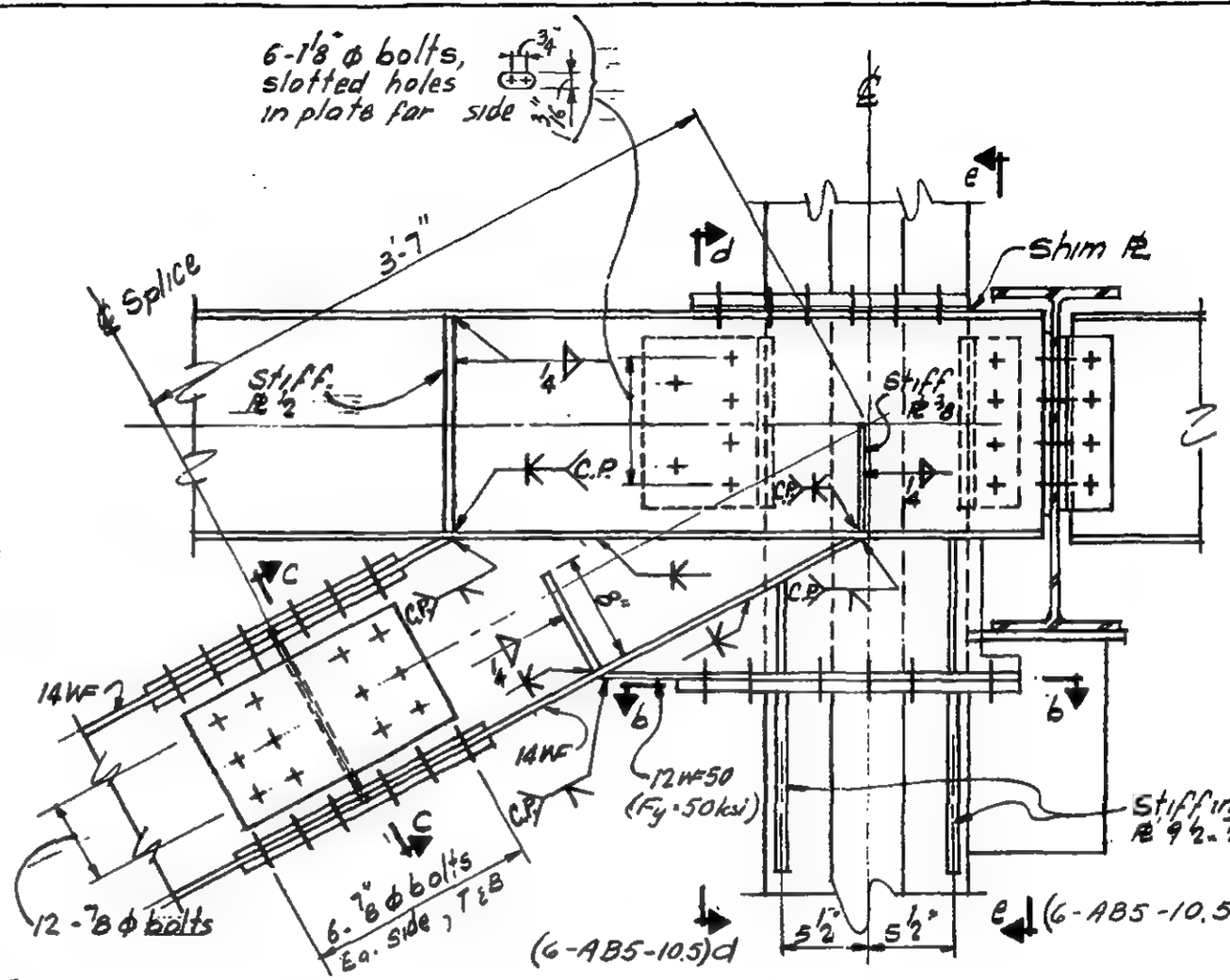

SECTION a-a

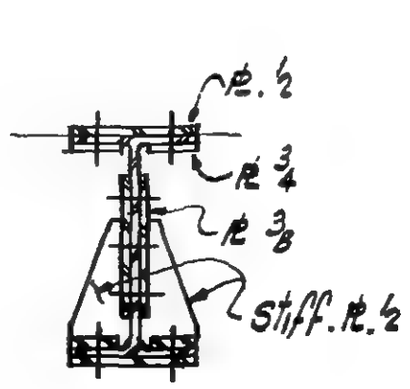

SECTION c-c

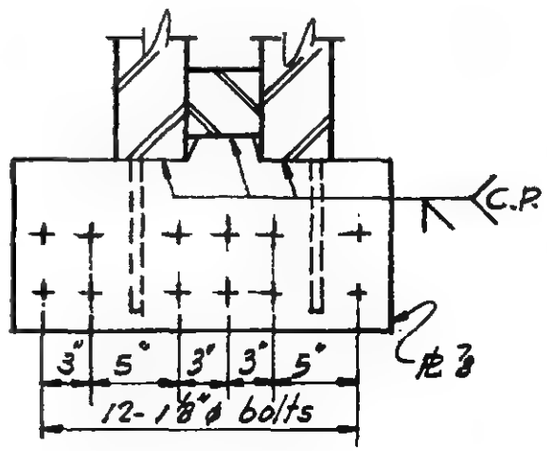

SECTION b-b

LICENSED PROFESSIONAL ENGINEER
LESLIE E. ROBERTSON
No. 34360
UNIVERSITY OF THE STATE OF NEW YORK

6-ABS-10.4

WORTHINGTON, SKILLING, HELLE & JACKSON — Civil & Structural Engineers

PROJECT: THE WORLD TRADE CENTER | TITLE: CONNECTION DETAIL 812 C | DATE: 8-14-67

REVISIONS

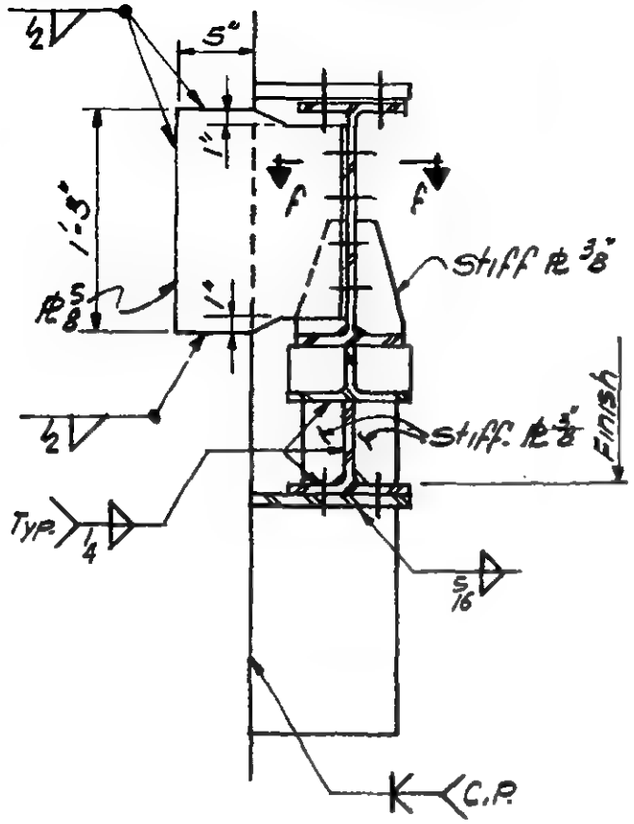

SECTION d-d

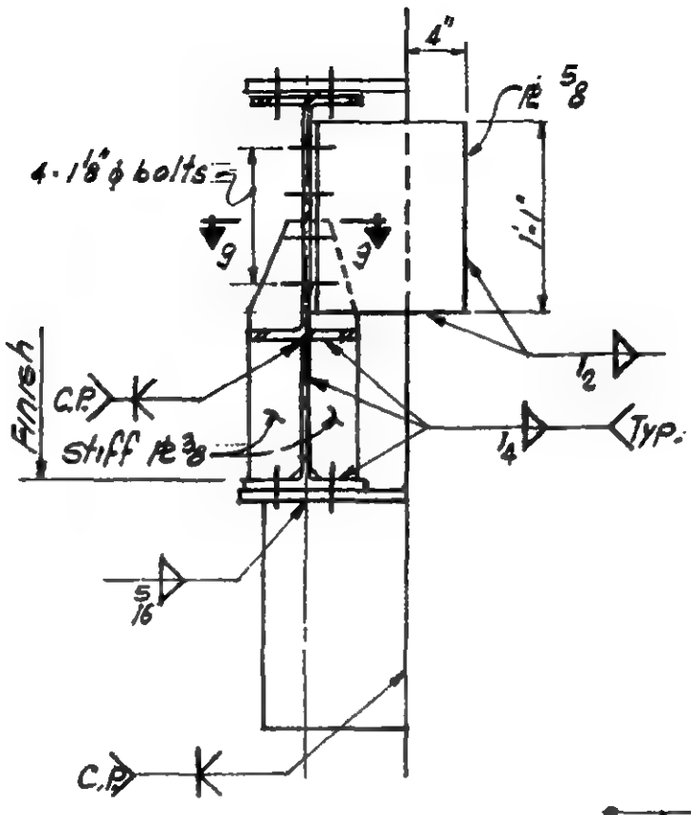

SECTION e-e

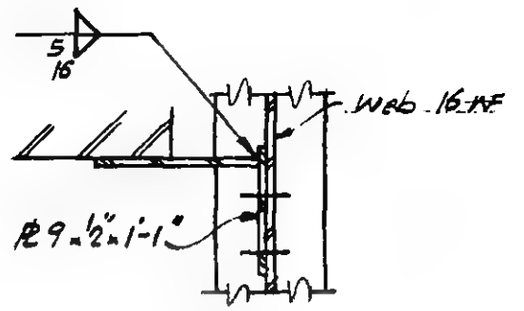

SECTION f-f

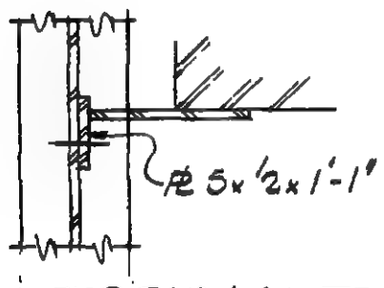

SECTION g-g

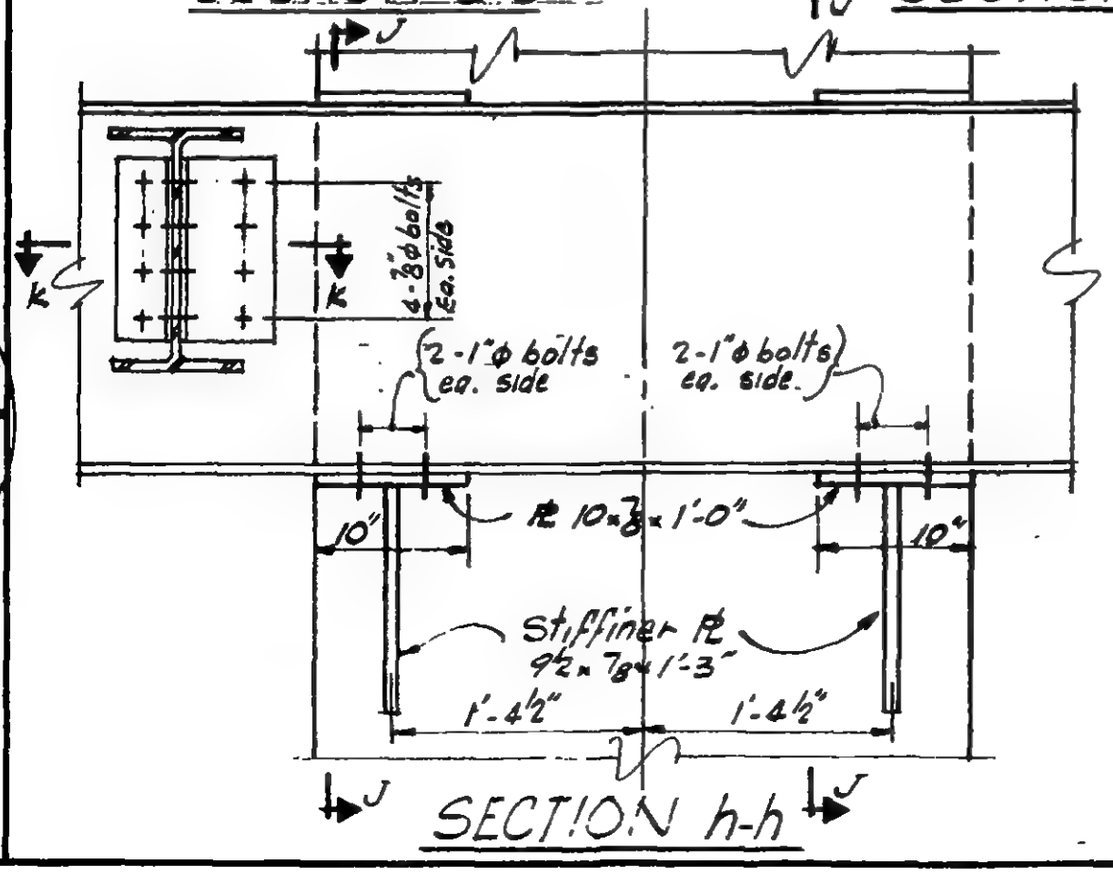

SECTION h-h

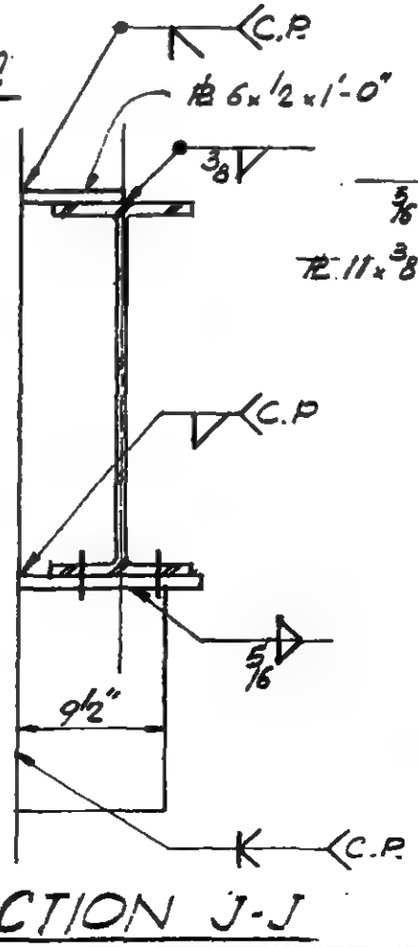

SECTION J-J

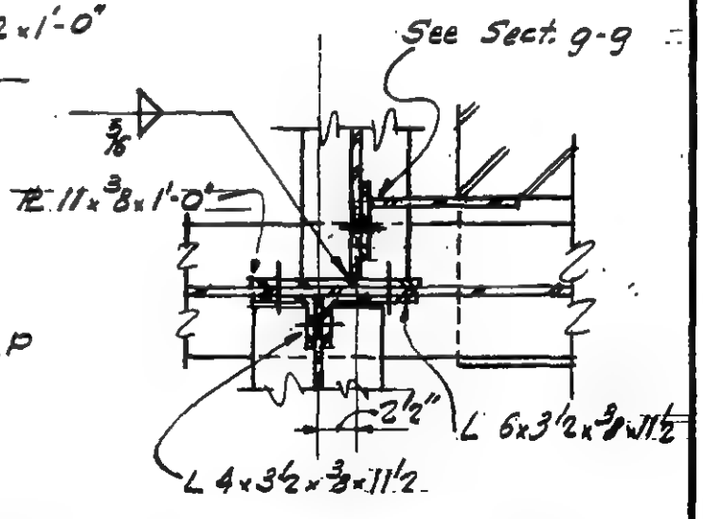

SECTION k-k

LICENSED PROFESSIONAL ENGINEER
LESLIE E. ROBERTSON
No. 34360
UNIVERSITY OF THE STATE OF NEW YORK

G-AB5-10.5

WORTHINGTON, SKILLING, HELLE & JACKSON — Civil & Structural Engineers

PROJECT: THE WORLD TRADE CENTER | TITLE: CONNECTION DETAIL 812 D (E, F & G) | DATE: 8-14-67

REVISIONS

2-9-68

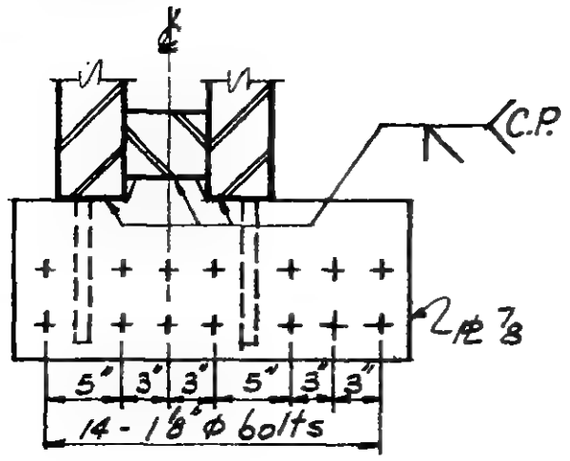

SECTION 6-6

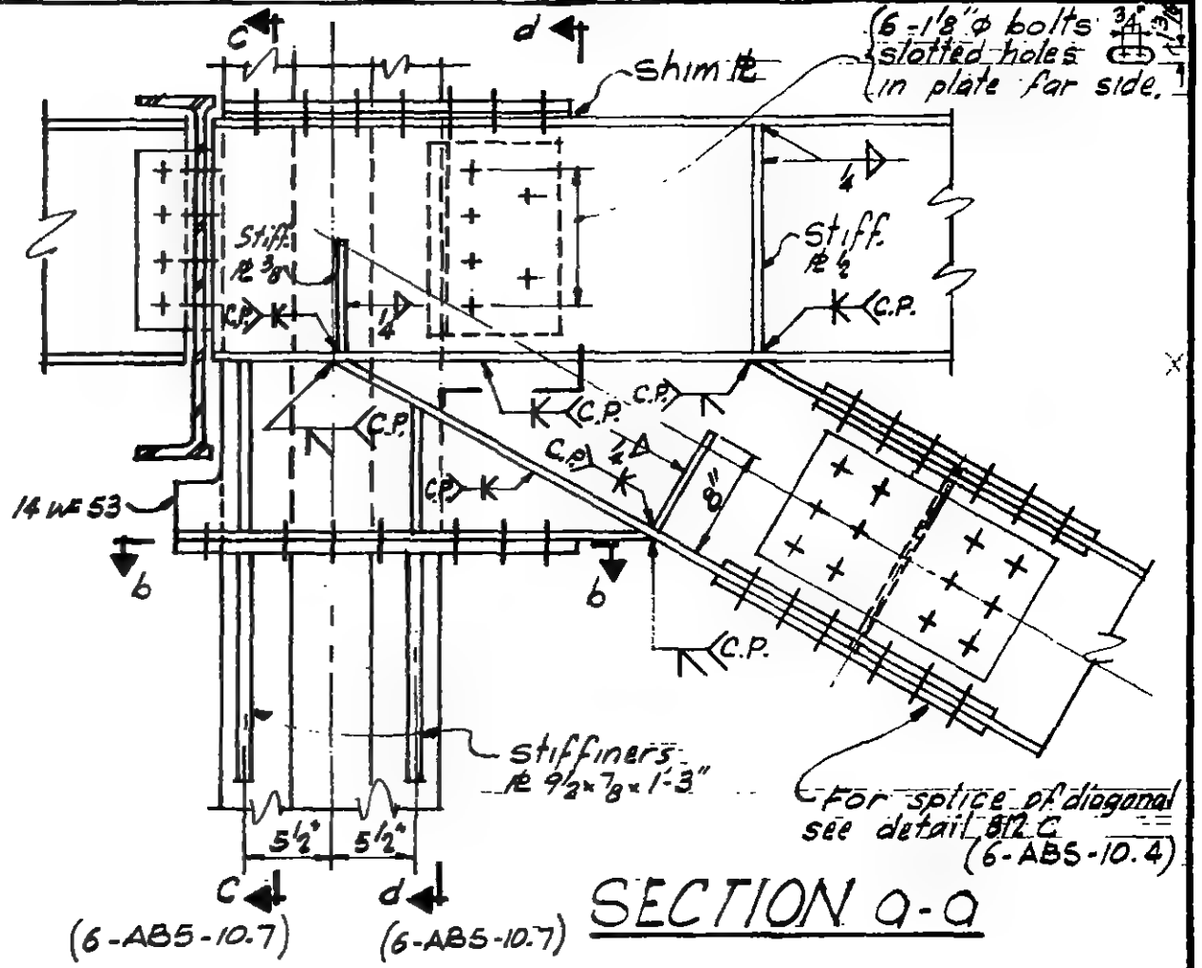

SECTION a-a

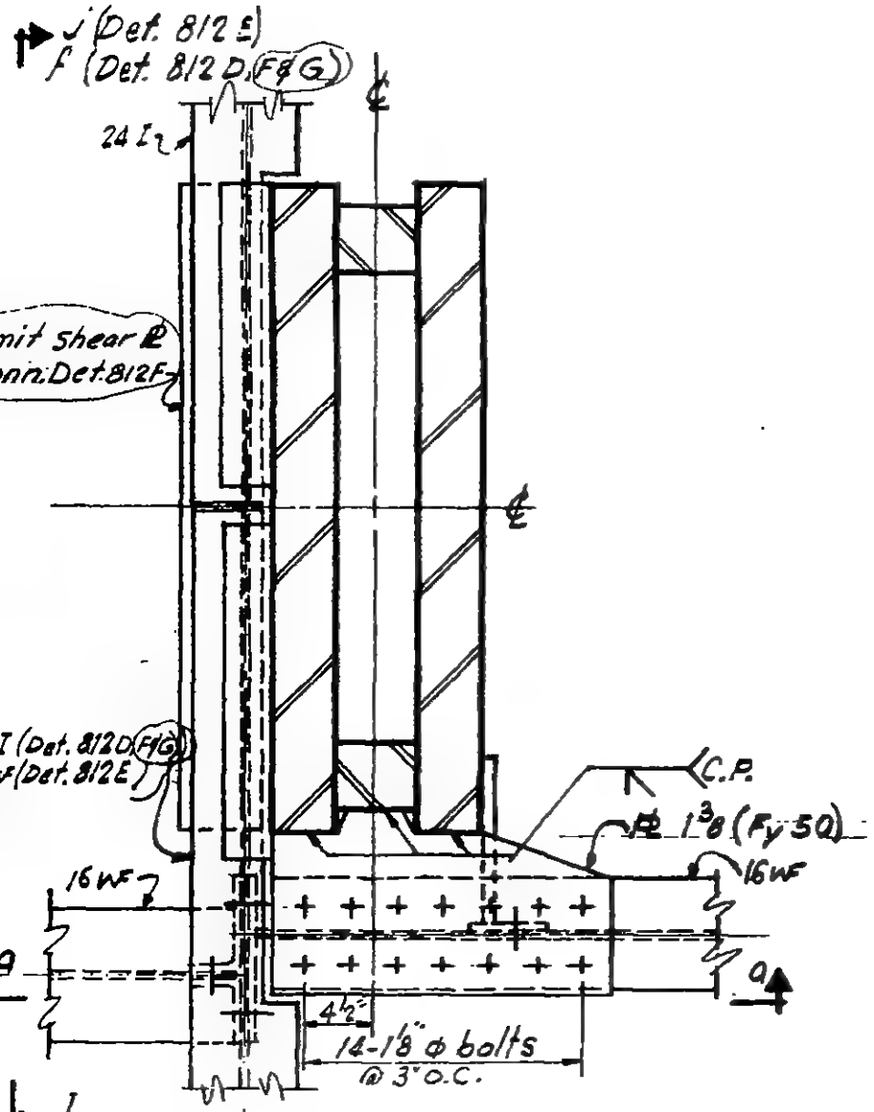

PLAN

LICENSED PROFESSIONAL ENGINEER — LESLIE E. ROBERTSON — No. 34360 — STATE OF NEW YORK

6-ABS-10.6

WORTHINGTON, SKILLING, HELLE & JACKSON — Civil & Structural Engineers

PROJECT	TITLE	DATE
THE WORLD TRADE CENTER	CONNECTION DETAIL 812 D, E F & G	8-14-67

REVISIONS

2-9-68

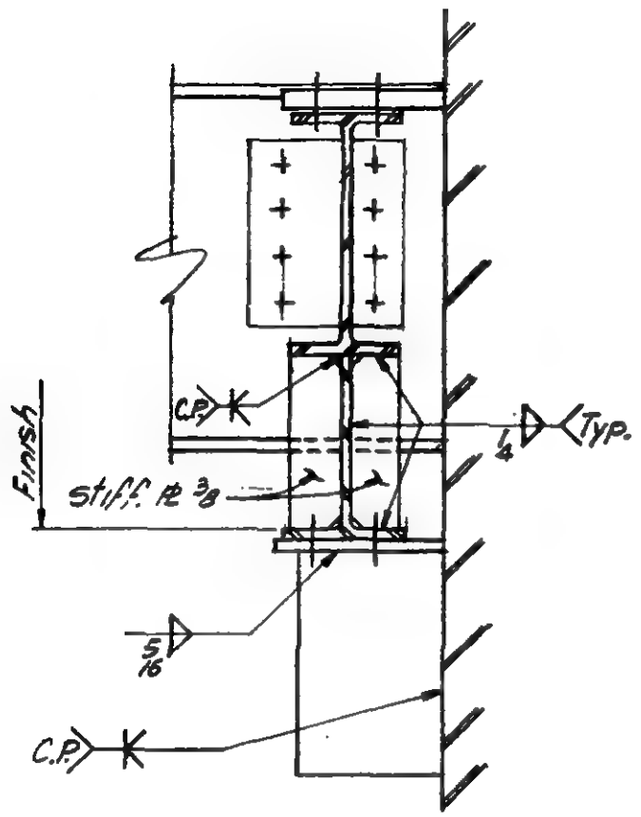

SECTION c-c

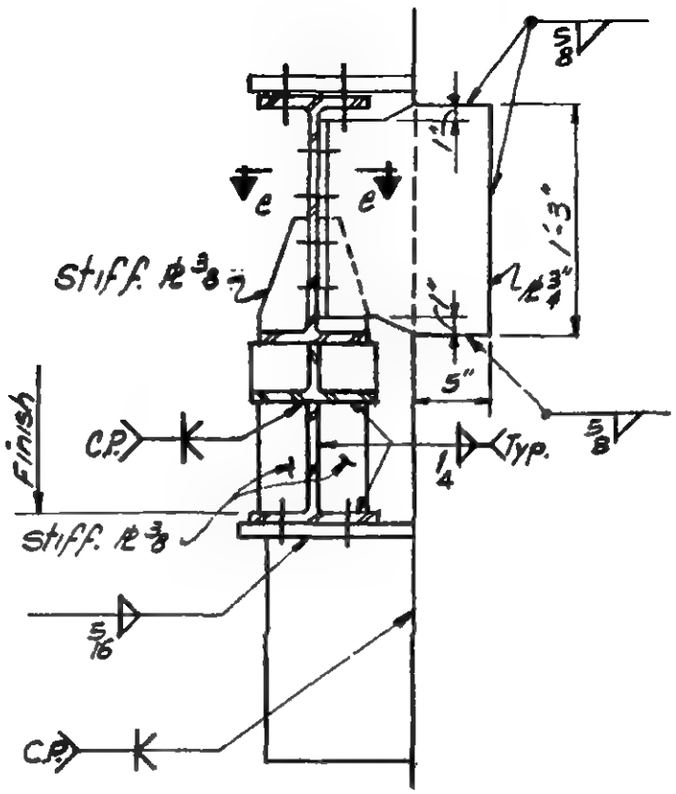

SECTION d-d

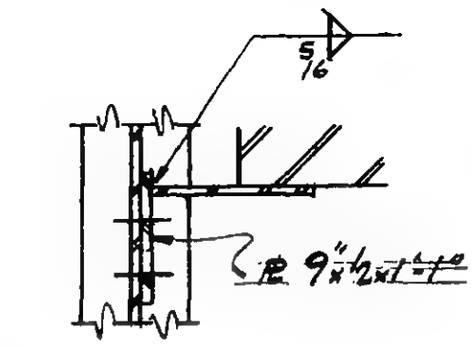

SECTION e-e

LICENSED PROFESSIONAL ENGINEER
LESLIE E. ROBERTSON
No. 34360
LICENSED IN THE STATE OF NEW YORK

G-ABS-10.7

WORTHINGTON, SKILLING, HELLE & JACKSON — Civil & Structural Engineers

PROJECT: THE WORLD TRADE CENTER | TITLE: CONNECTION DETAIL 812 D, E, F & G | DATE: 8-14-67

REVISIONS

2-9-68

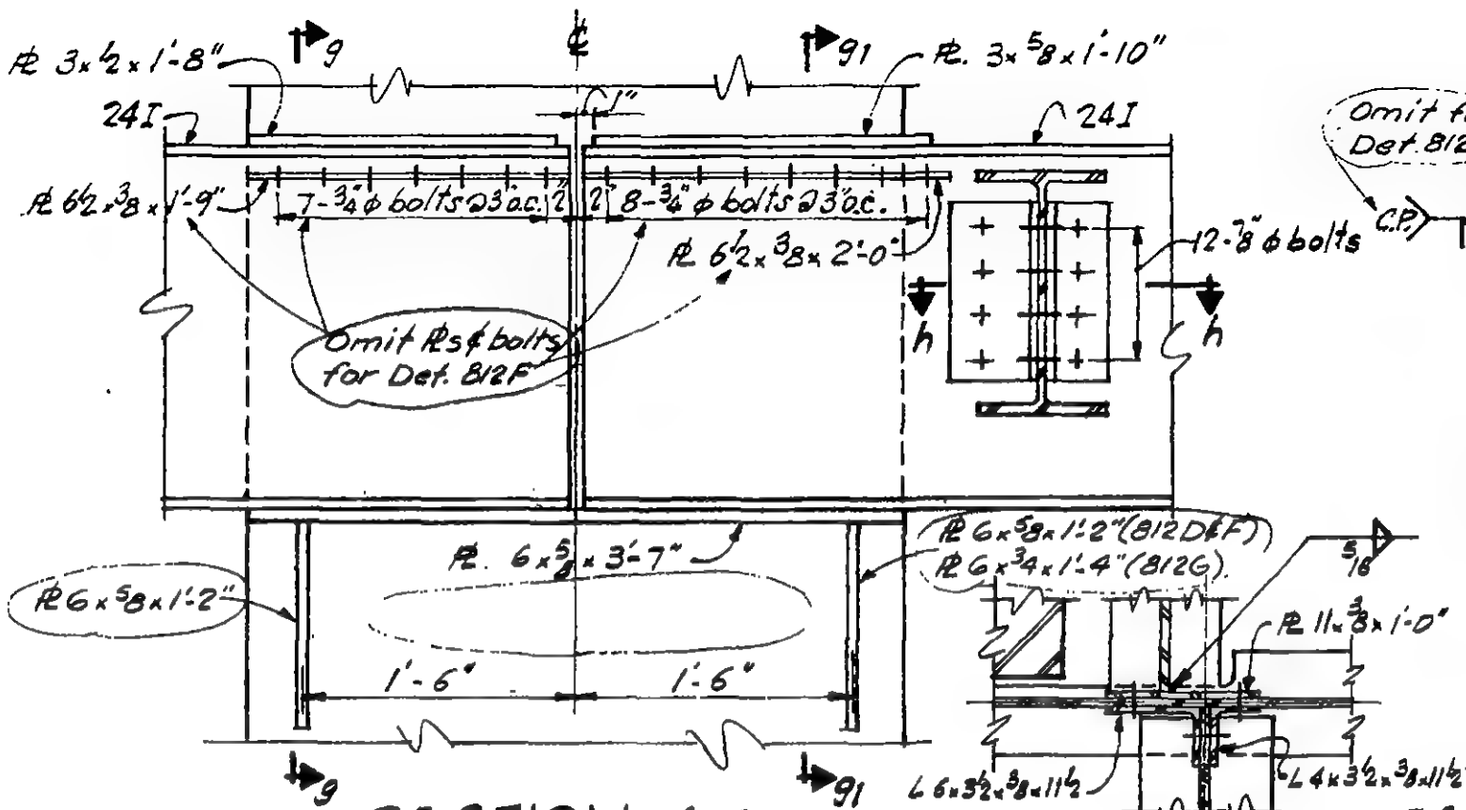

SECTION f-f

SECTION h-h

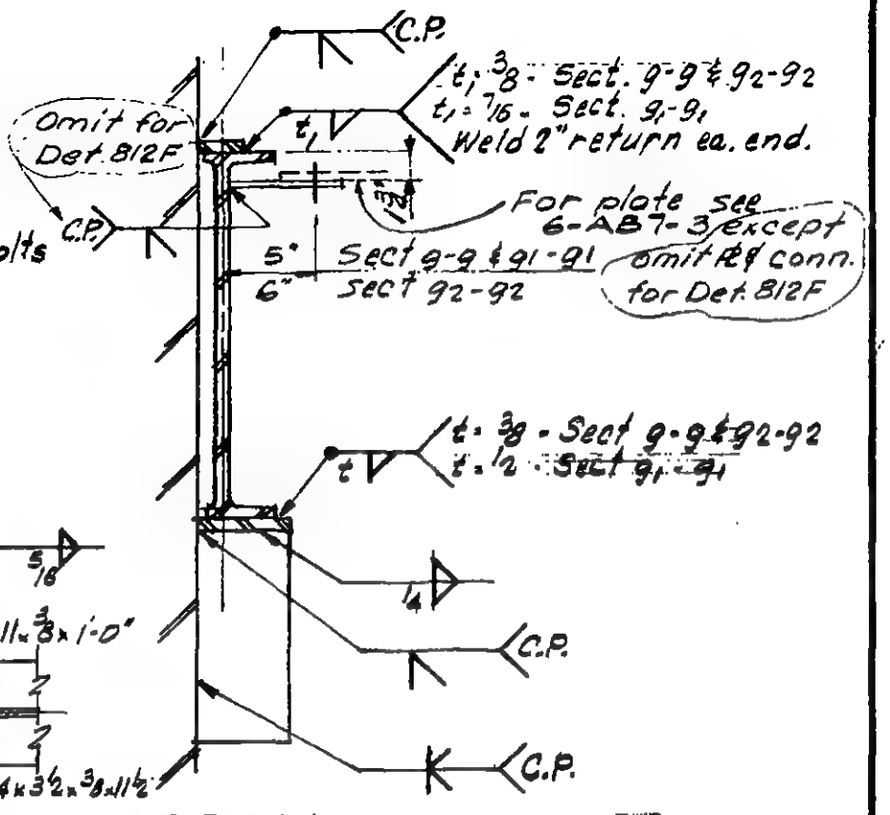

SECTION 9-9, 91-91 & 92-92

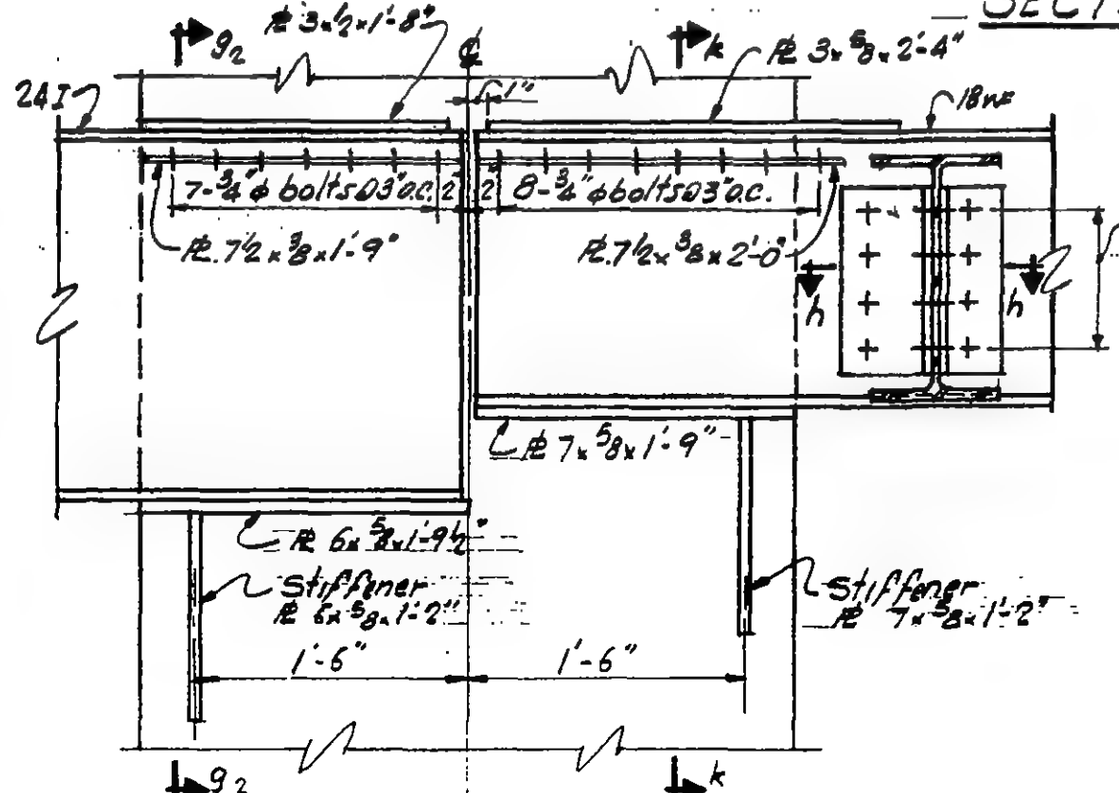

SECTION J-J

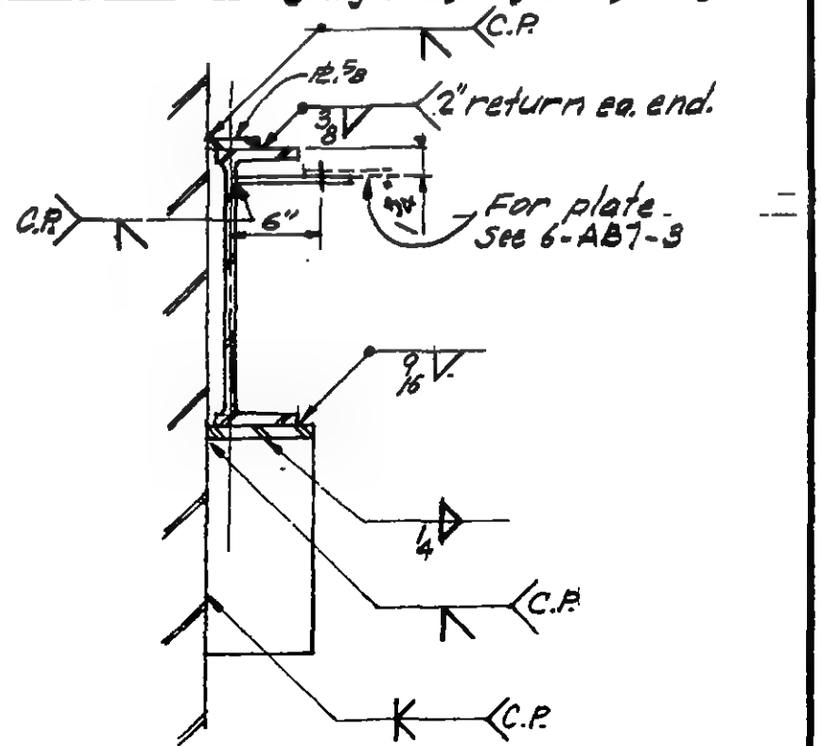

SECTION k-k

LICENSED PROFESSIONAL ENGINEER
LESLIE E. ROBERTSON
No. 34360
UNIVERSITY OF THE STATE OF NEW YORK

6-AB5-10.8

WORTHINGTON, SKILLING, HELLE & JACKSON — Civil & Structural Engineers

PROJECT THE WORLD TRADE CENTER | TITLE VERTICAL BRACING DETAIL 812 H & G | DATE 3-13-68

EVISIONS

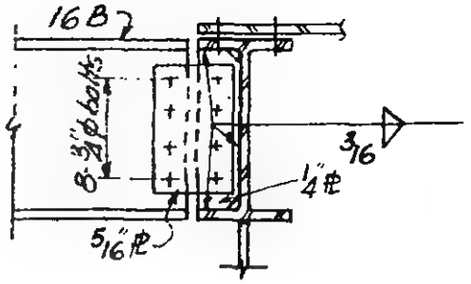

SECTION h-h
(DETAIL 812 G only)

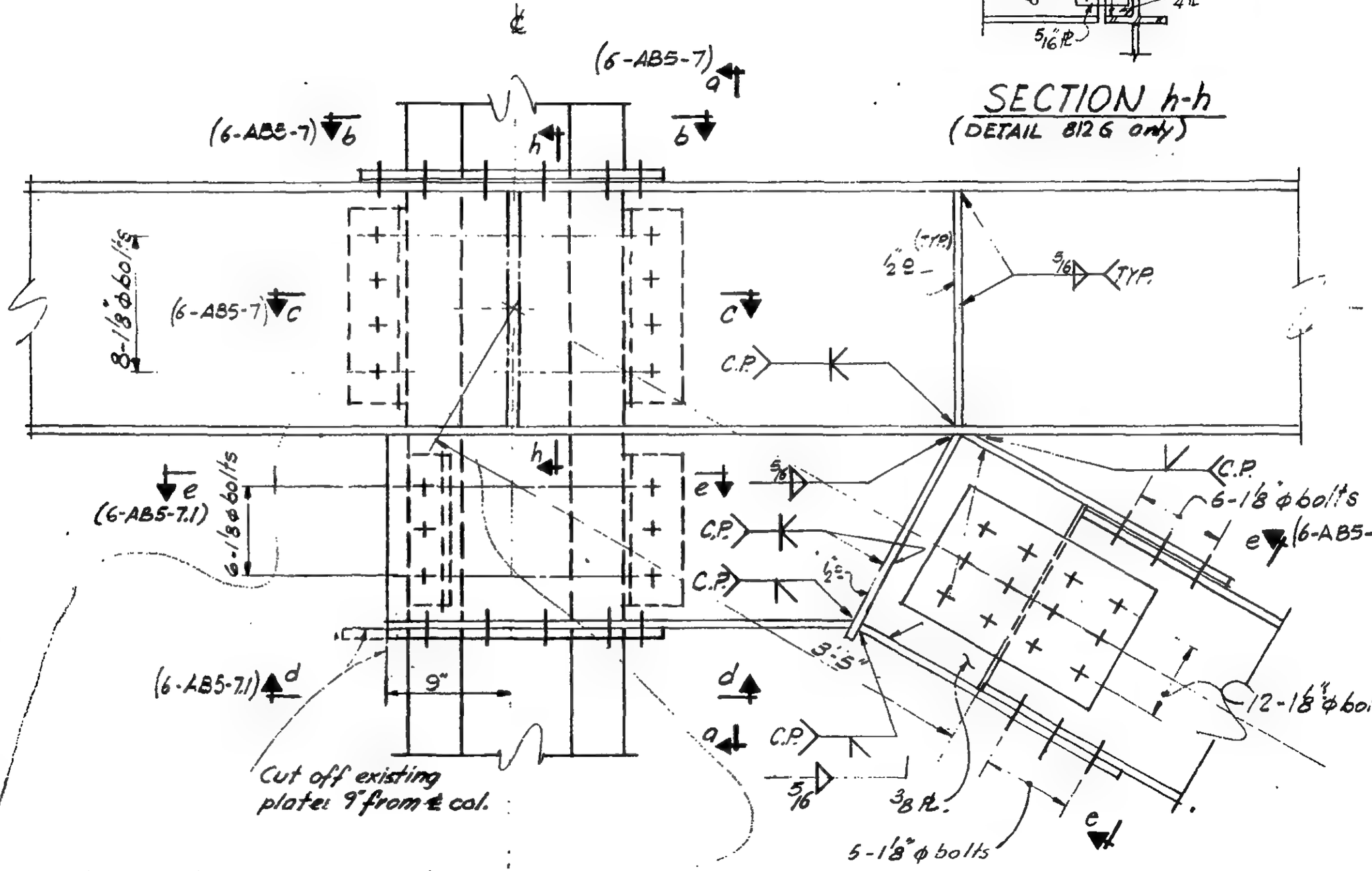

Detail 812H is at col. 906, floor 5, Tower A and was formerly detail 812A. Circled area indicates portion revised.

LICENSED PROFESSIONAL ENGINEER
LESLIE E. ROBERTSON
No. 34360
UNIVERSITY OF THE STATE OF NEW YORK

6-AB5-10.9

WORTHINGTON, SKILLING, HELLE & JACKSON — Civil & Structural Engineers

PROJECT	TITLE	DATE
THE WORLD TRADE CENTER	VERTICAL BRACING DETAIL 812 K & M	3-13-68

REVISIONS

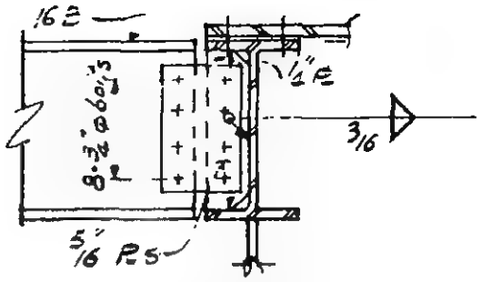

SECTION h-h
(DETAIL 812 M only)

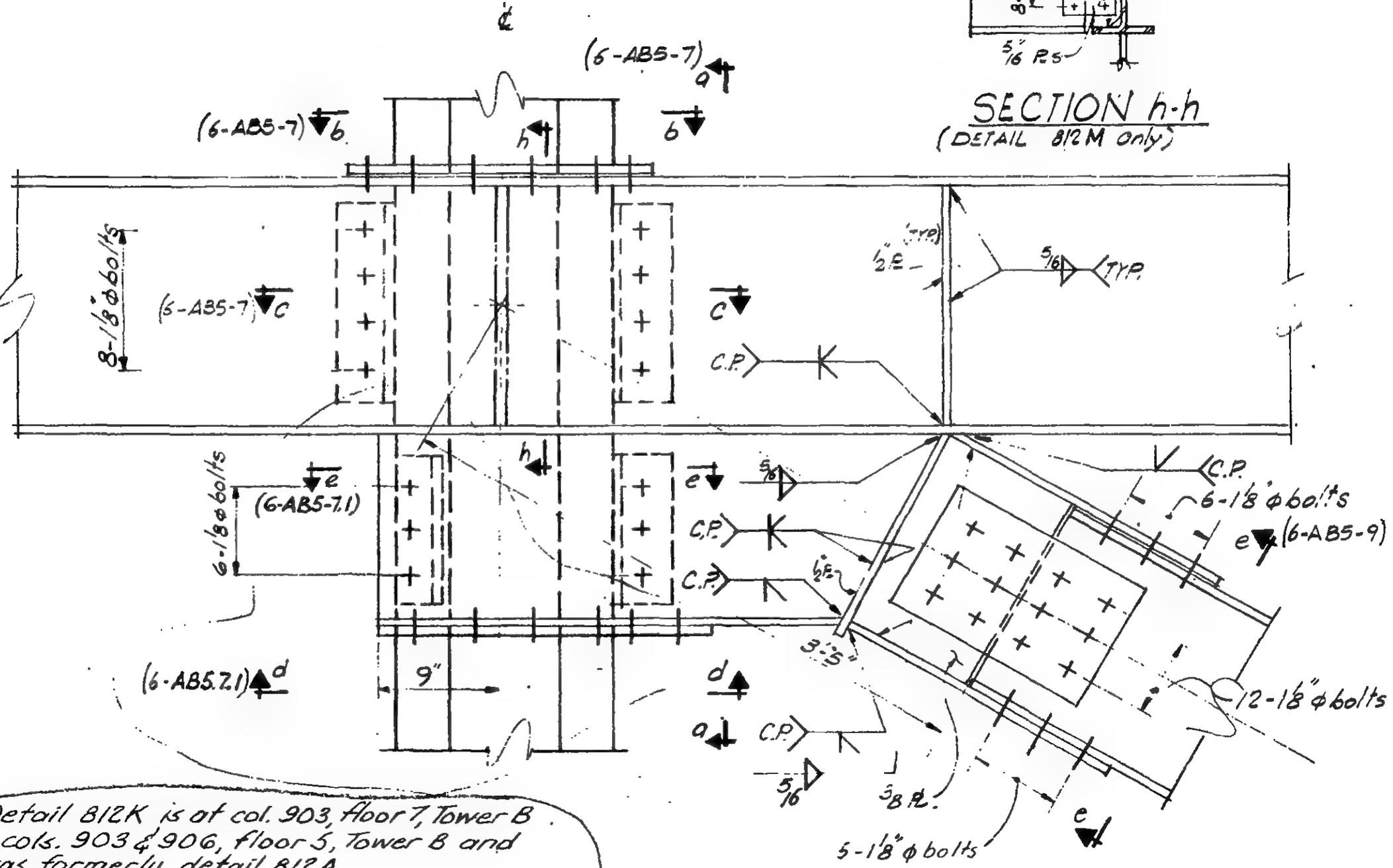

Detail 812K is at col. 903, floor 7, Tower B & cols. 903 & 906, floor 5, Tower B and was formerly detail 812A.
Detail 812M is at col. 906, floor 7, Tower B and was formerly 812G.
Circled area indicates portion revised.

LICENSED PROFESSIONAL ENGINEER
LESLIE E. ROBERTSON
No. 34360
UNIVERSITY OF THE STATE OF NEW YORK

6-AB5-10.10

WORTHINGTON, SKILLING, HELLE & JACKSON — Civil & Structural Engineers

PROJECT	TITLE	DATE
THE WORLD TRADE CENTER	VERTICAL BRACING DETAIL 813 A & 813B	6-19-67

REVISIONS

8-14-67

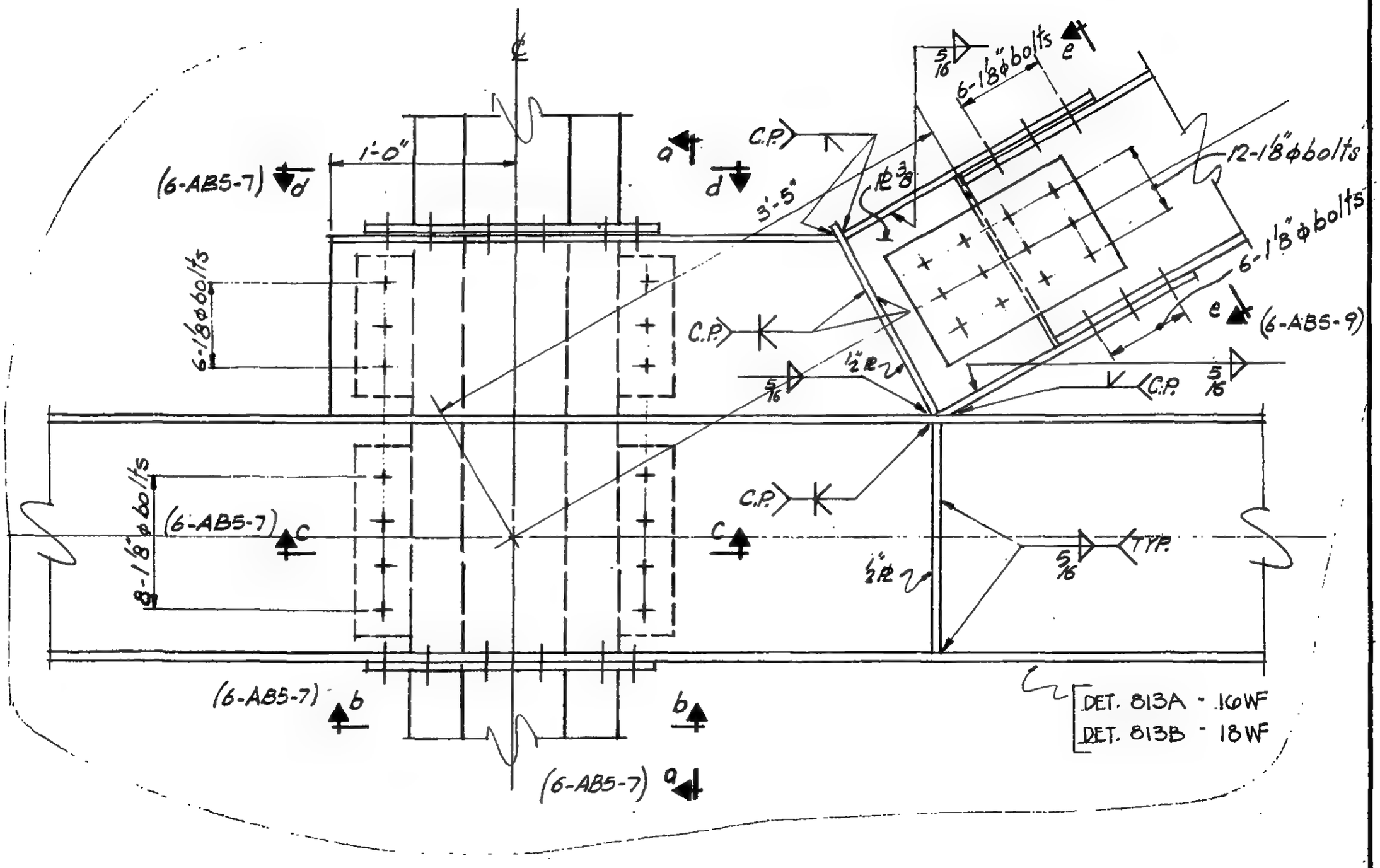

DET. 813A - 16WF
DET. 813B - 18WF

LICENSED PROFESSIONAL ENGINEER
LESLIE E. ROBERTSON
No. 34360
UNIVERSITY OF THE STATE OF NEW YORK

6-AB5-11

WORTHINGTON, SKILLING, HELLE & JACKSON — Civil & Structural Engineers

PROJECT: THE WORLD TRADE CENTER | TITLE: VERTICAL BRACING DETAIL 813 C | DATE: 3-13-68

REVISIONS

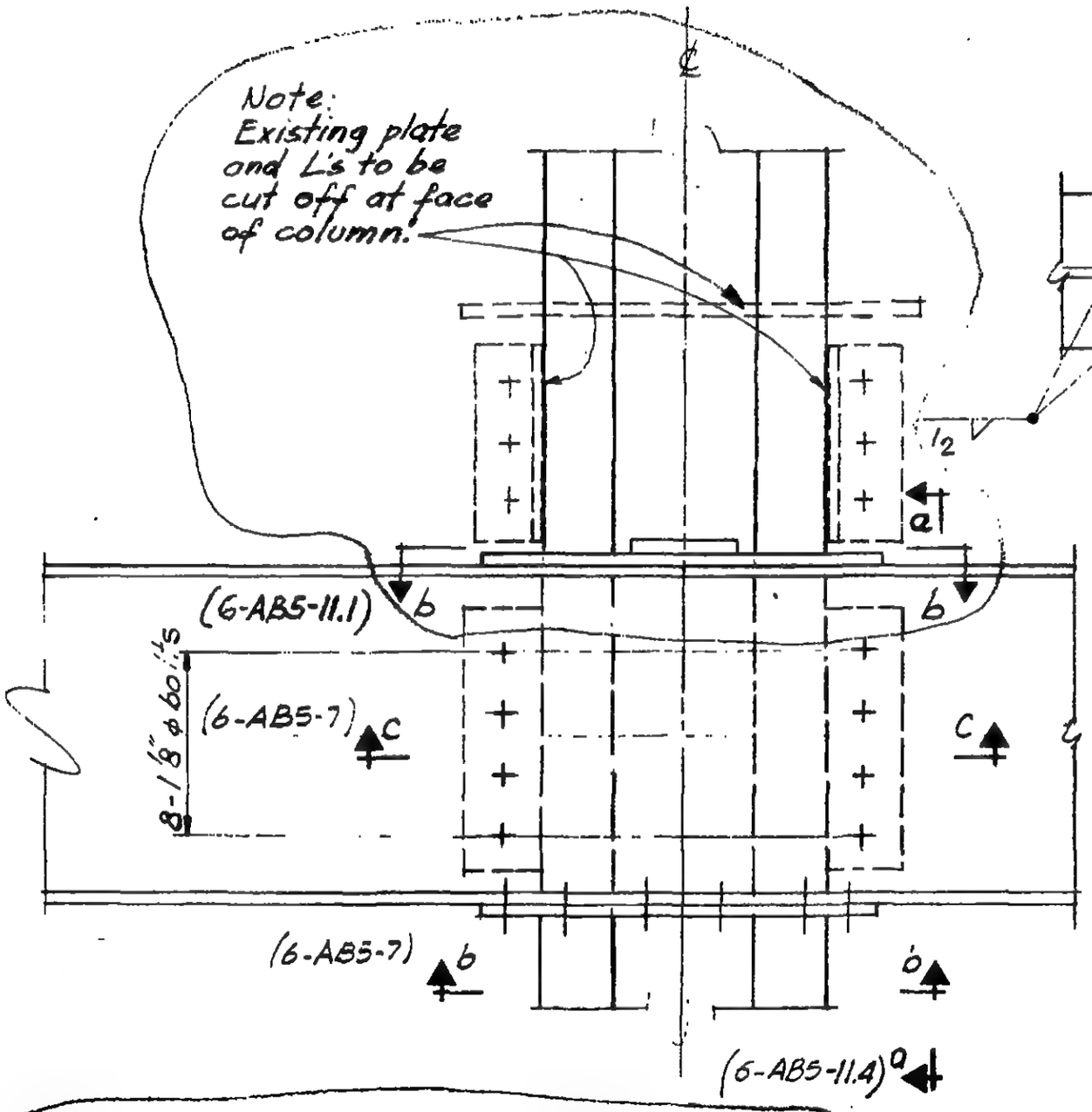

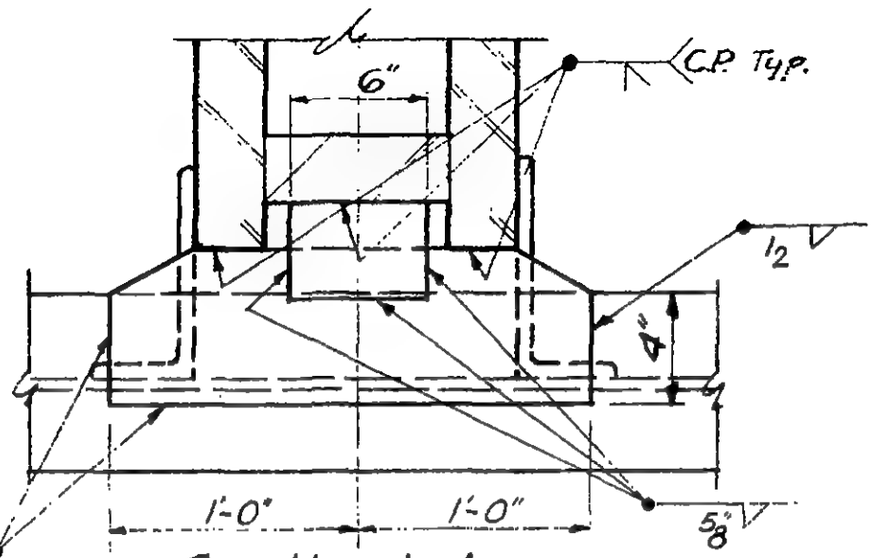

Section b-b

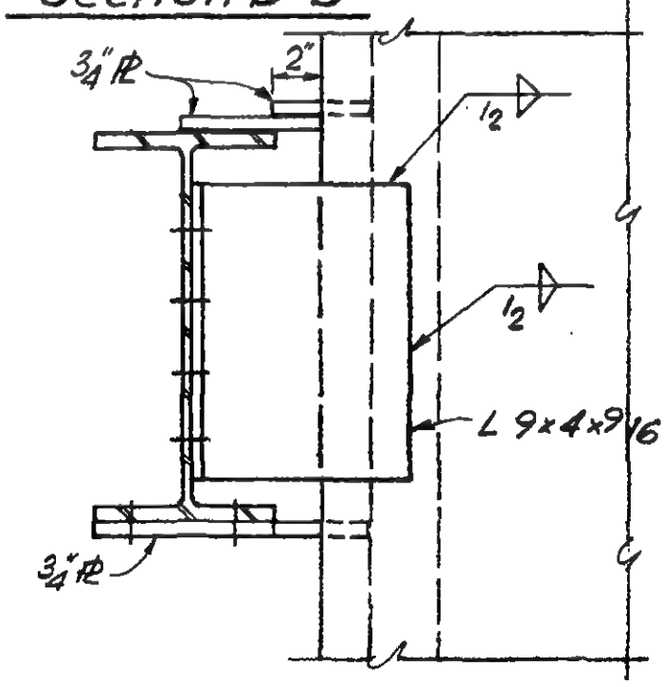

Section a-a

Detail 813C is at col. 604, floor 4, Tower A and was formerly detail 813A. Circled area indicates portion revised.

LICENSED PROFESSIONAL ENGINEER
LESLIE E. ROBERTSON
No. 34360
UNIVERSITY OF THE STATE OF NEW YORK

6-AB5-11.1

WORTHINGTON, SKILLING, HELLE & JACKSON — Civil & Structural Engineers

PROJECT	TITLE	DATE
THE WORLD TRADE CENTER	VERTICAL BRACING DETAIL 813 D	3-13-68

REVISIONS

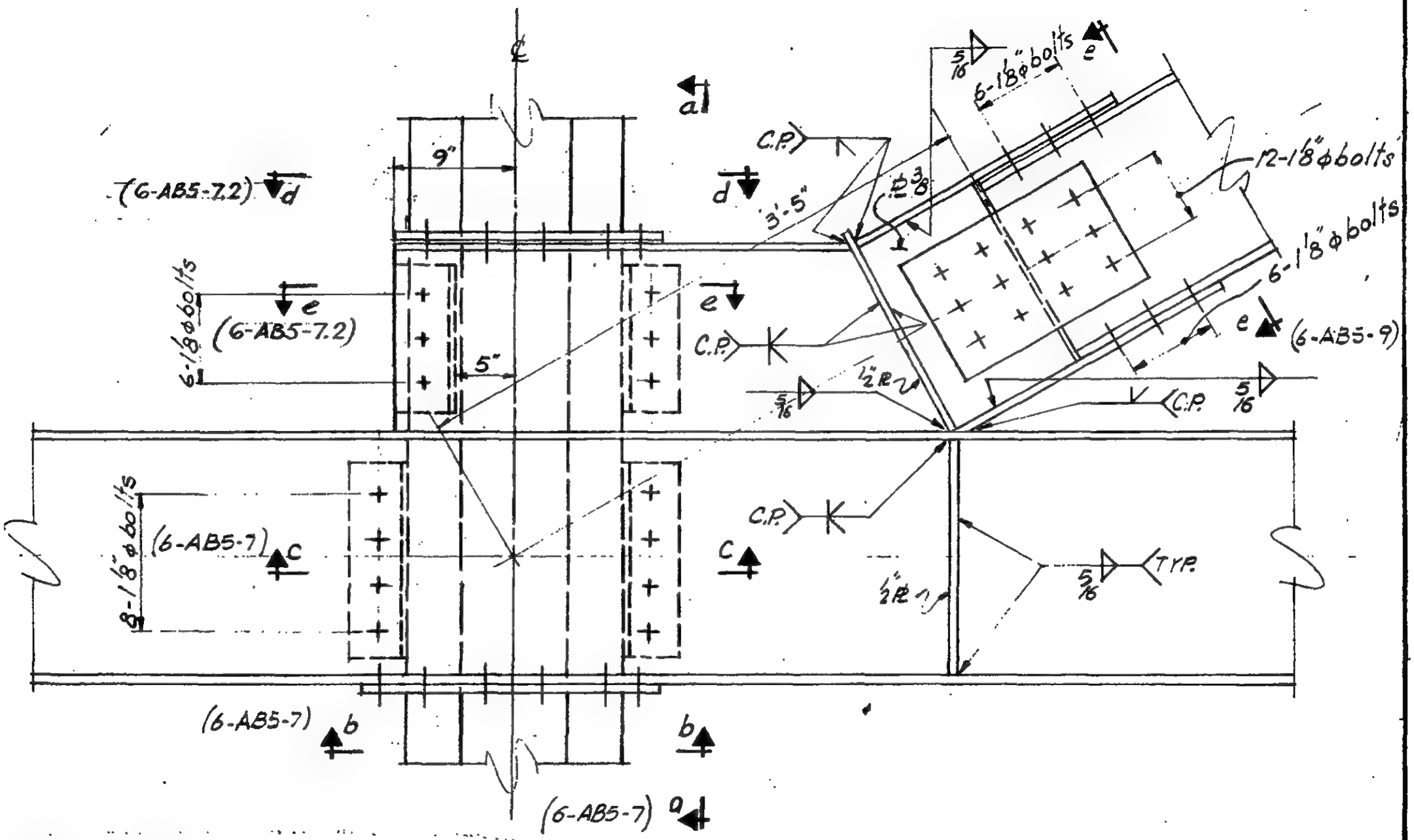

Detail 813D is at col 906, floor 2, Tower A and was formerly detail 813B. Circled area indicates portion revised.

LICENSED PROFESSIONAL ENGINEER
LESLIE E. ROBERTSON
No. 34360
UNIVERSITY OF THE STATE OF NEW YORK

6-AB5-11.2

WORTHINGTON, SKILLING, HELLE & JACKSON — Civil & Structural Engineers

PROJECT	TITLE	DATE
THE WORLD TRADE CENTER	VERTICAL BRACING DETAIL 813 E & F	3-13-68

EVISIONS

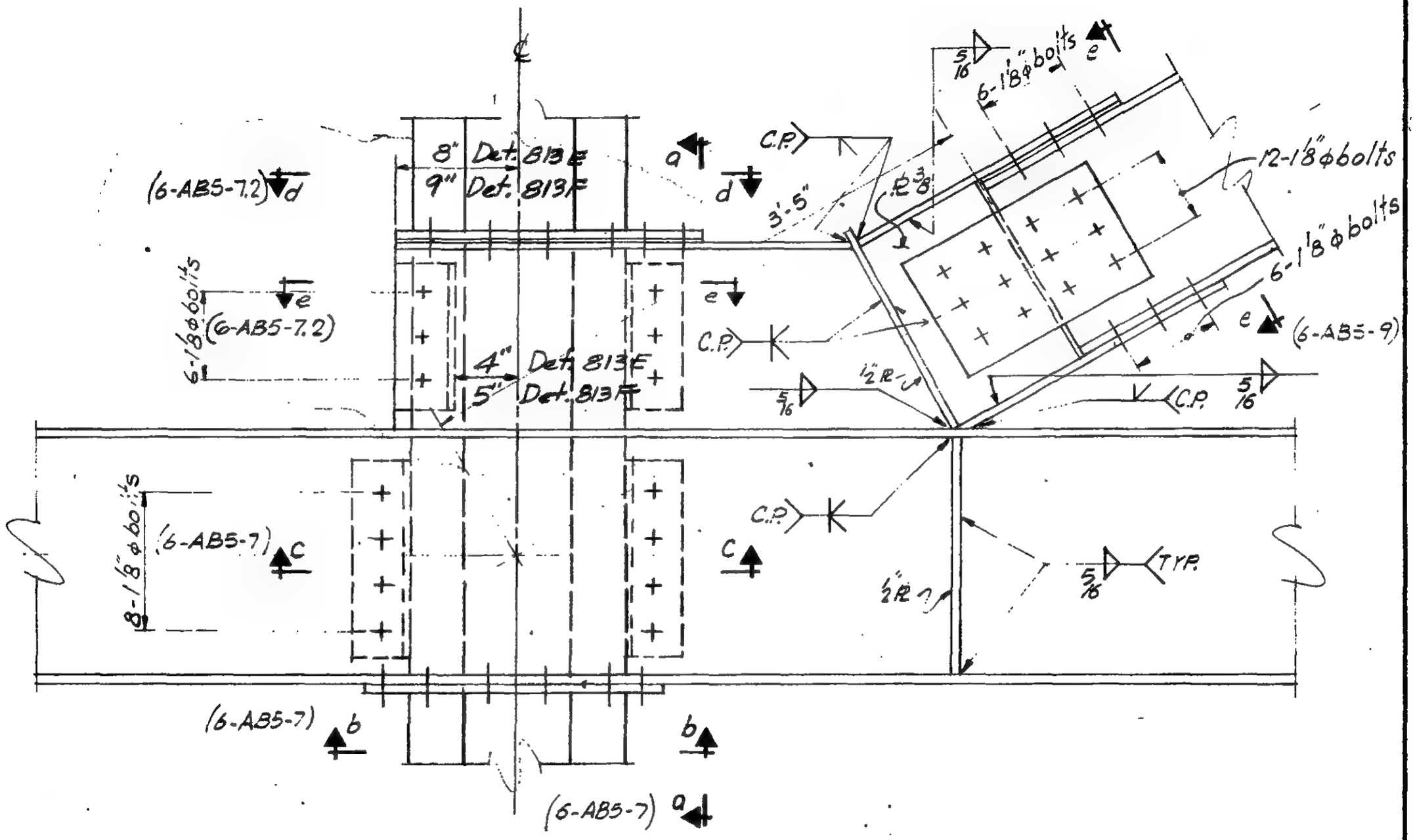

Detail 813 F is at cols. 903 & 906, floor 2, Tower B. Detail 813 E is at col. 605, floor 4, Tower B & cols. 604 & 605, floor 6, Tower B and was formerly detail 813 A or B. Circled area indicates portion revised.

LICENSED PROFESSIONAL ENGINEER
LESLIE E. ROBERTSON
No. 34360
UNIVERSITY OF THE STATE OF NEW YORK

6-ABS-11.3

SKILLING - HELLE - CHRISTIANSEN - ROBERTSON Structural & Civil Engineers

PROJECT THE WORLD TRADE CENTER | TITLE VERTICAL BRACING DETAIL 813G | DATE 3-13-68

REVISIONS

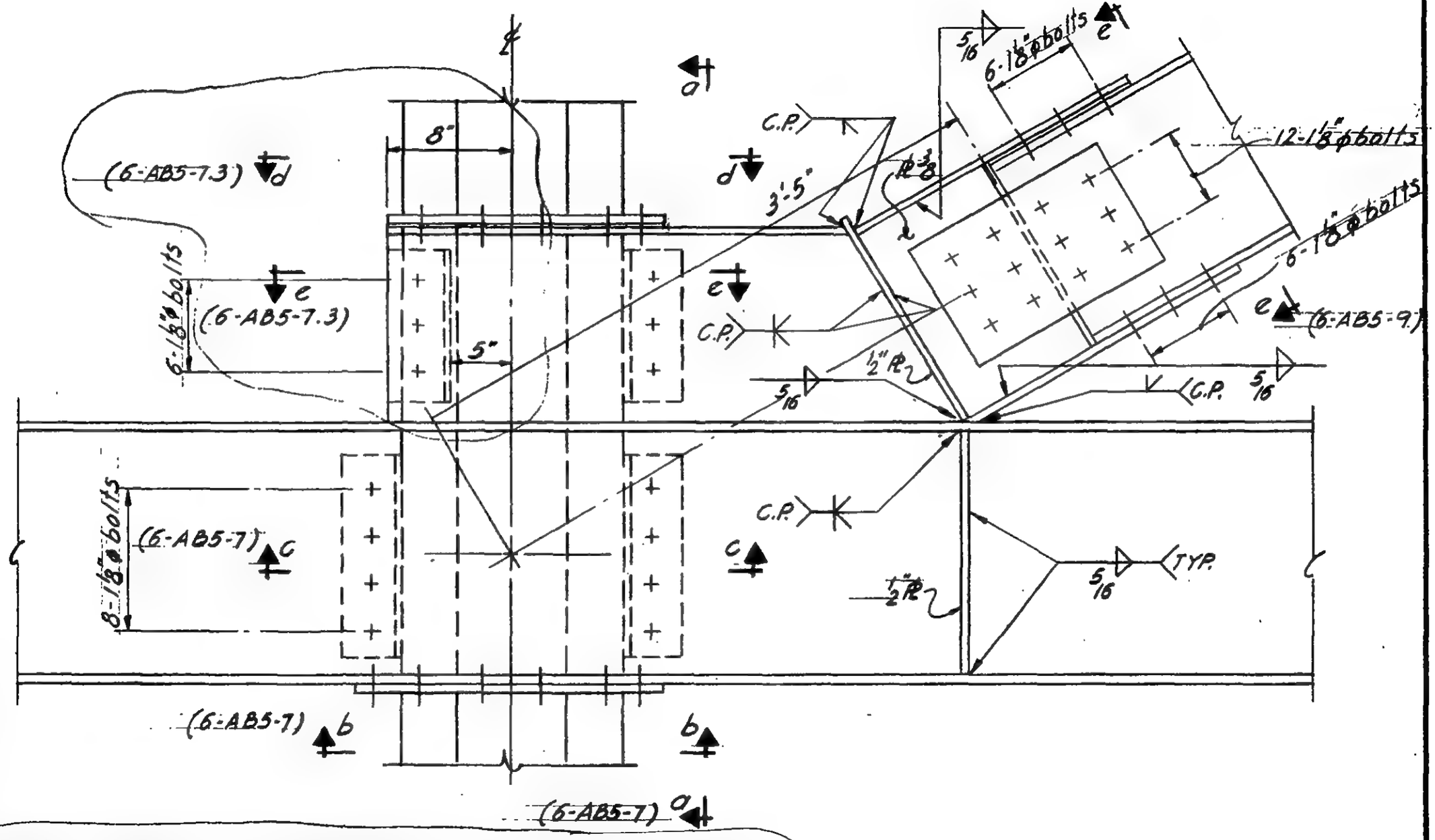

Detail 813G is at col. 604, floor 6, col. 605, floor 4 & 6 Tower A and was formerly detail 813A
Circled area indicates portion revised.

LICENSED PROFESSIONAL ENGINEER LESLIE E. ROBERTSON No. 34360 UNIVERSITY OF THE STATE OF NEW YORK

6-AB5-11.4

WORTHINGTON, SKILLING, HELLE & JACKSON — Civil & Structural Engineers

PROJECT: THE WORLD TRADE CENTER | TITLE: VERTICAL BRACING DETAIL (814 A & 814 B) | DATE: 6-19-67

REVISIONS

8-14-57

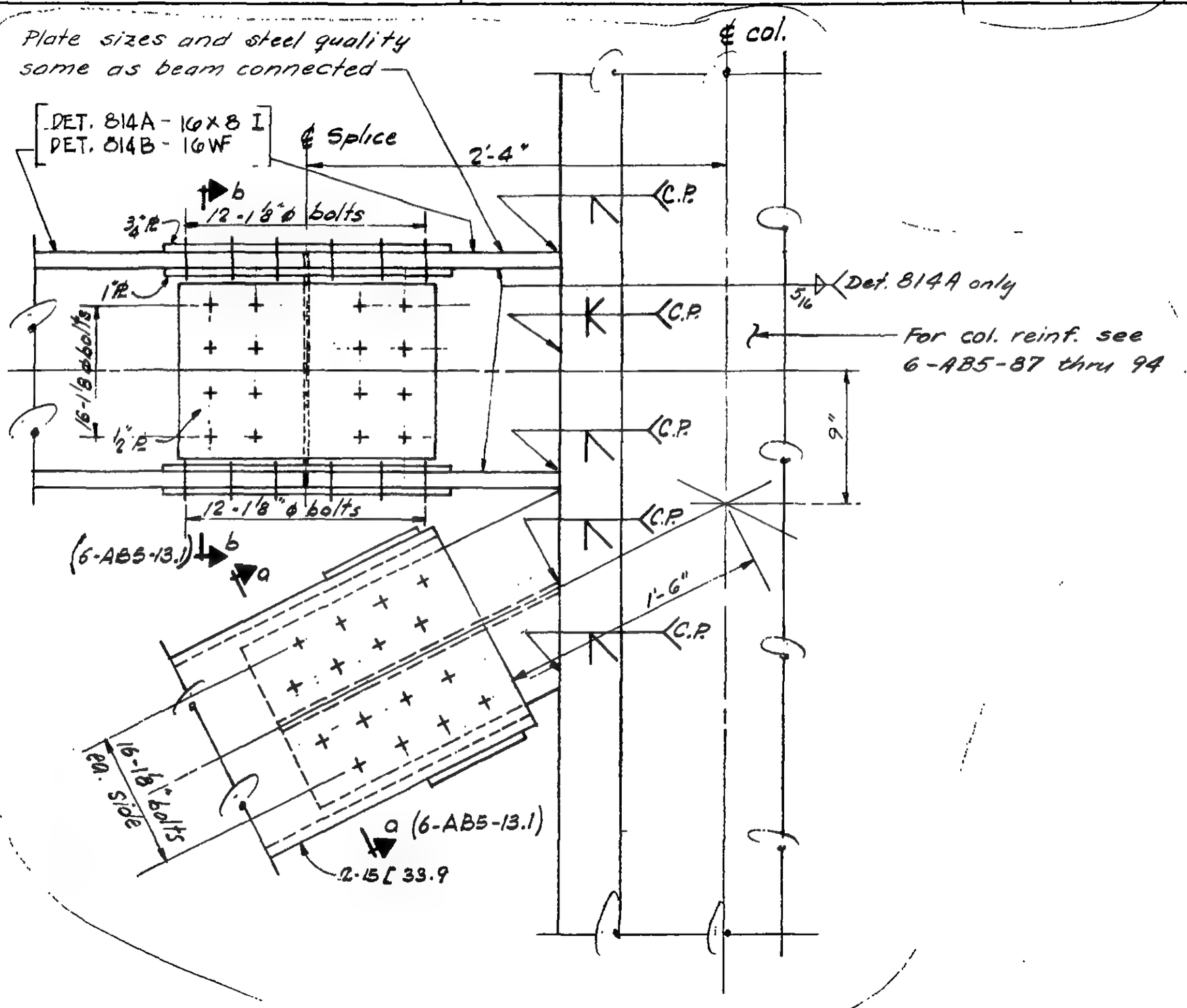

LICENSED PROFESSIONAL ENGINEER — LESLIE E. ROBERTSON — No. 34360 — UNIVERSITY OF THE STATE OF NEW YORK

6-AB5-12

WORTHINGTON, SKILLING, HELLE & JACKSON — Civil & Structural Engineers

PROJECT: THE WORLD TRADE CENTER | TITLE: VERTICAL BRACING DETAIL 815A & 815B | DATE: 6-19-67

REVISIONS

8-14-67
9-29-67

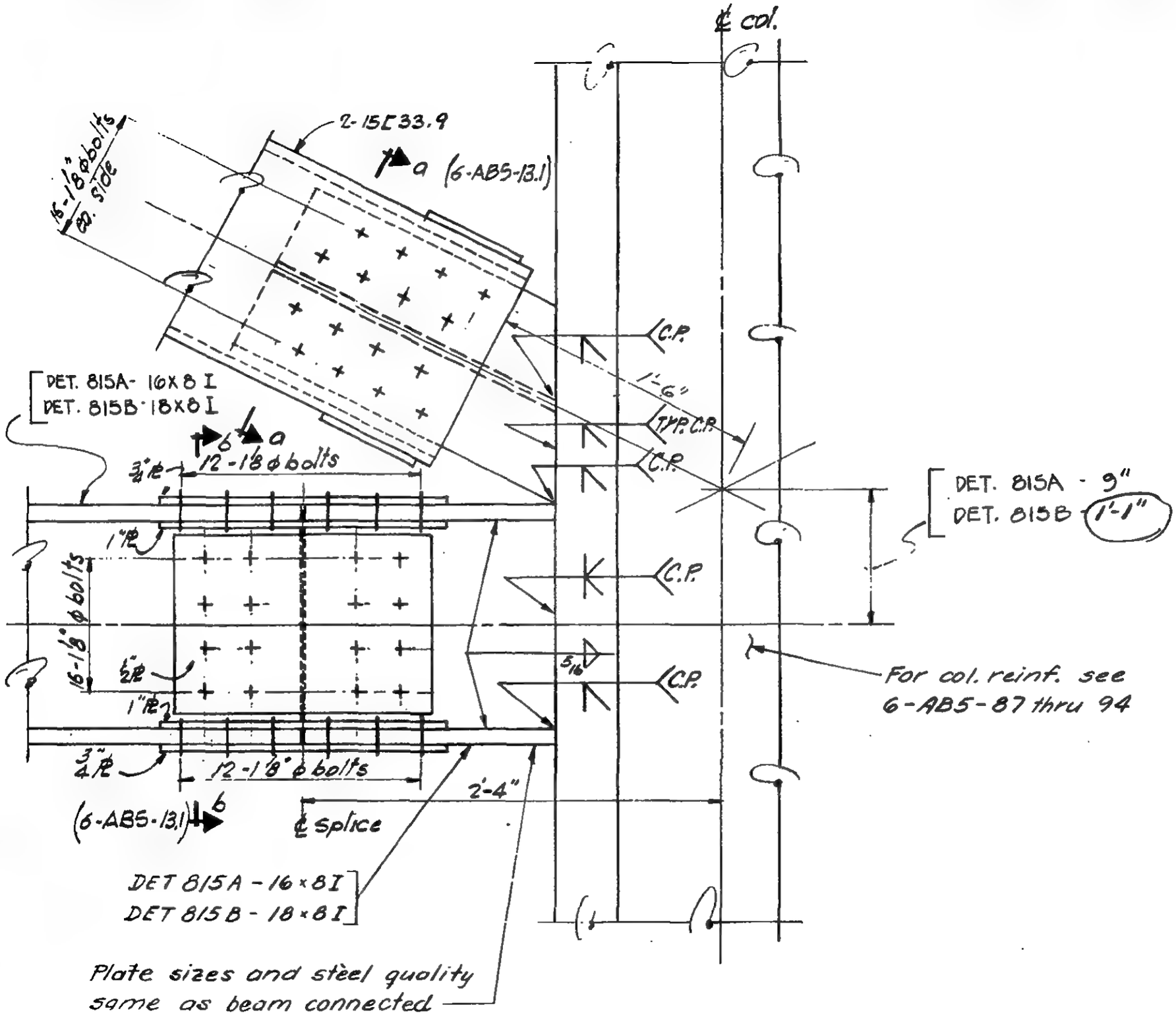

LESLIE E. ROBERTSON
No. 24380
UNIVERSITY OF THE STATE OF NEW YORK

6-ABS-13

WORTHINGTON, SKILLING, HELLE & JACKSON — Civil & Structural Engineers

PROJECT: THE WORLD TRADE CENTER | TITLE: SECTIONS DETAILS 814A, 814B, 815A & 815B | DATE: 8-14-67

REVISIONS

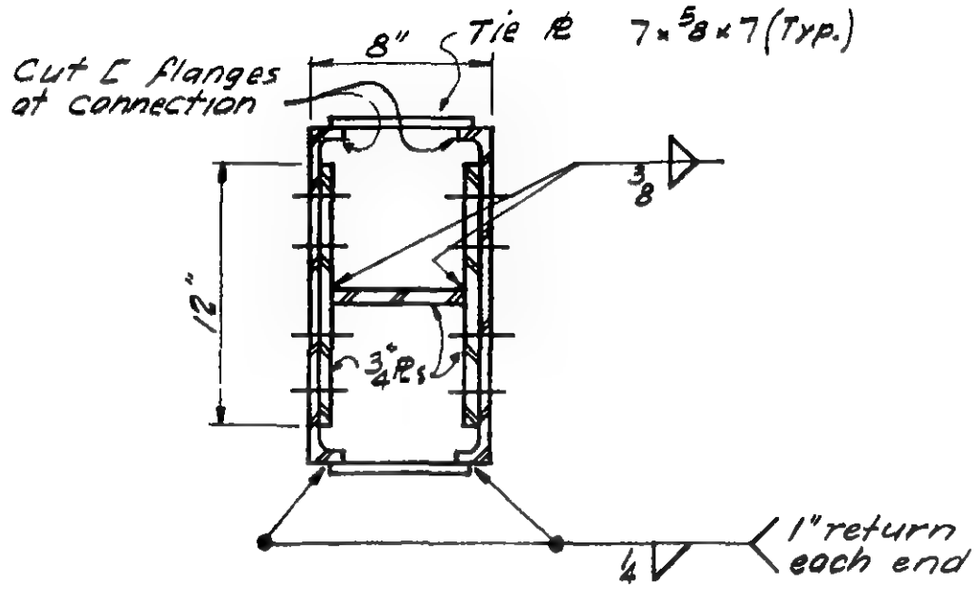

SECTION a-a

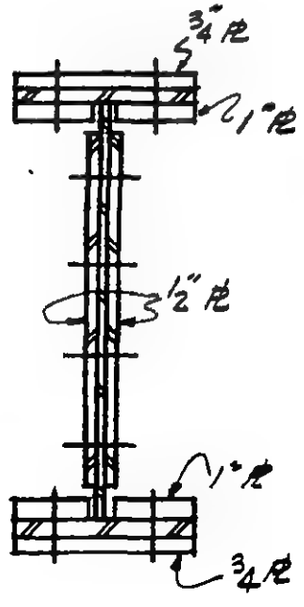

SECTION 6-6

LICENSED PROFESSIONAL ENGINEER
LESLIE E. ROBERTSON
No. 34360
THE STATE OF NEW YORK

6-AB5-13.1

WORTHINGTON, SKILLING, HELLE & JACKSON — Civil & Structural Engineers

PROJECT THE WORLD TRADE CENTER | TITLE VERTICAL BRACING DETAIL 816 A | DATE 6-19-67

REVISIONS

8-14-67

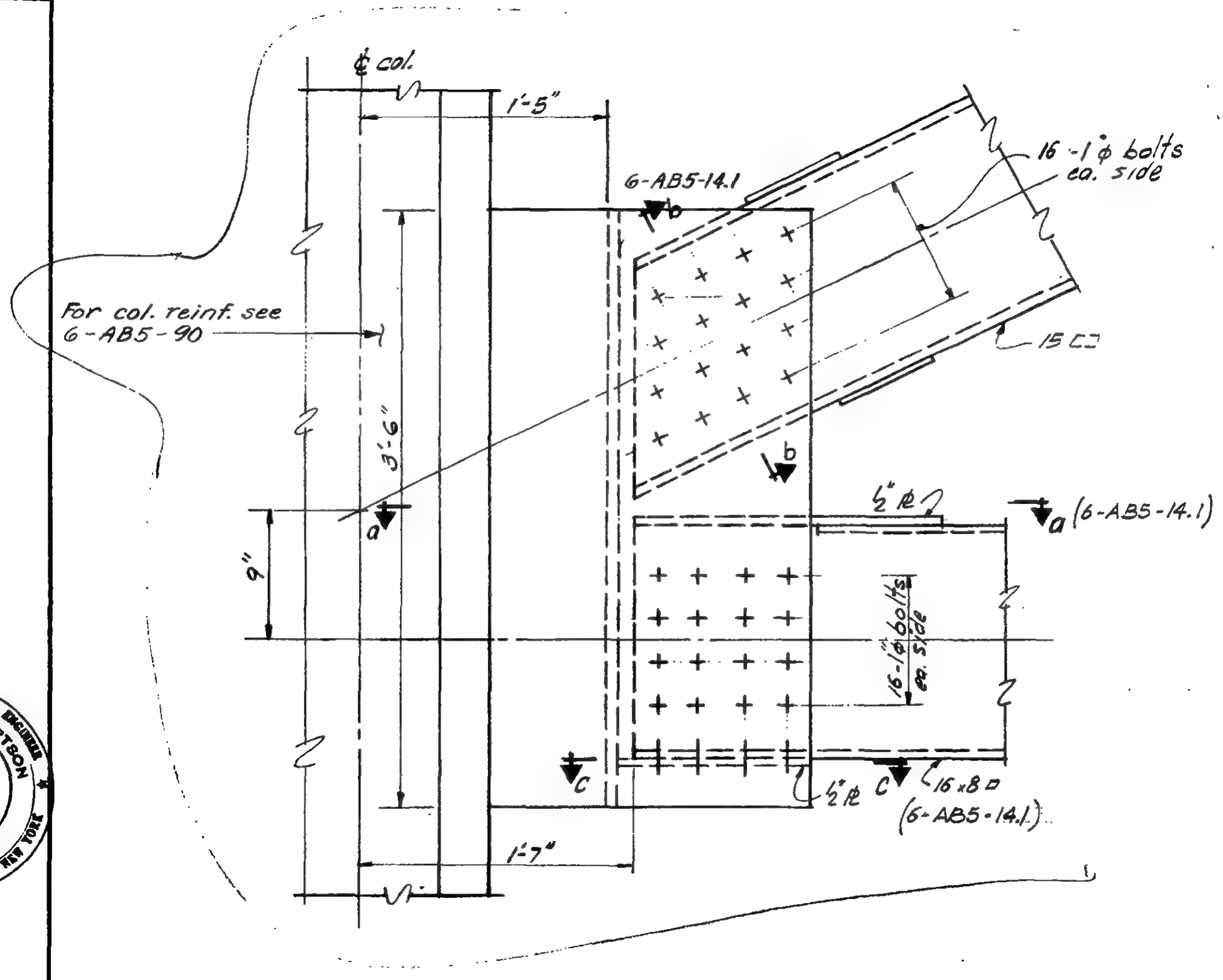

LICENSED PROFESSIONAL ENGINEER
LESLIE E. ROBERTSON
No. 34360
UNIVERSITY OF THE STATE OF NEW YORK

6-AB5-14

WORTHINGTON, SKILLING, HELLE & JACKSON — Civil & Structural Engineers

PROJECT THE WORLD TRADE CENTER | TITLE SECTION DETAILS 816A & 817A | DATE 8-14-67

REVISIONS

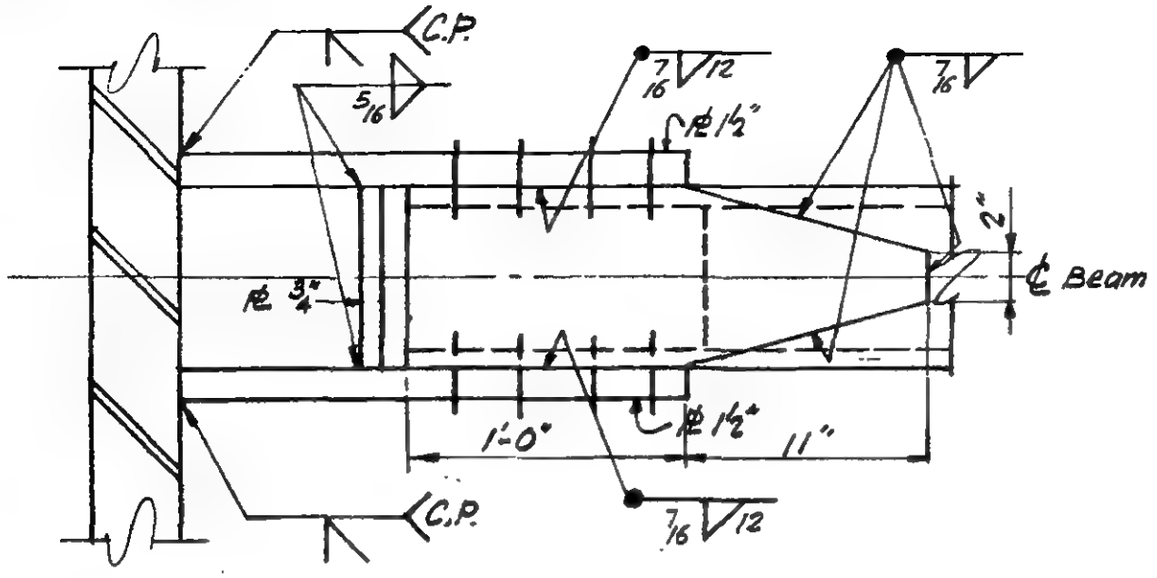

SECTION a-a

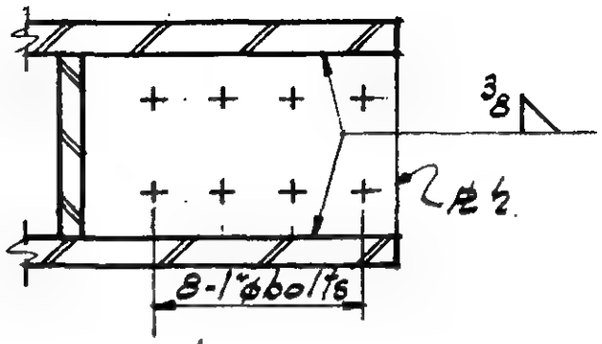

Section C-C

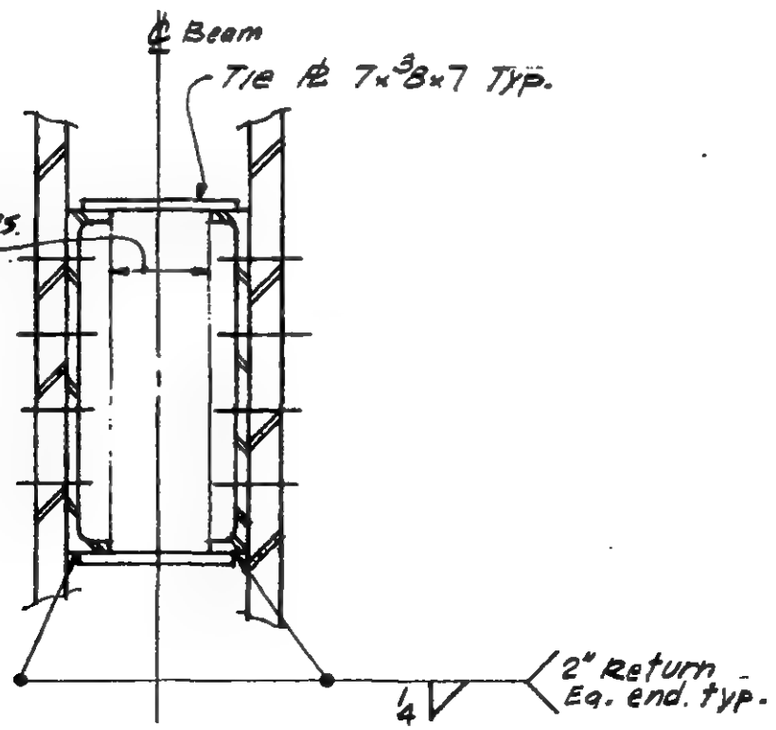

SECTION b-b

LICENSED PROFESSIONAL ENGINEER
LESLIE E. ROBERTSON
No. 34360
UNIVERSITY OF THE STATE OF NEW YORK

G-AB5-14.1

WORTHINGTON, SKILLING, HELLE & JACKSON — Civil & Structural Engineers

PROJECT THE WORLD TRADE CENTER | TITLE VERTICAL BRACING DETAIL (817 A) | DATE 6-19-67

REVISIONS

8-14-67

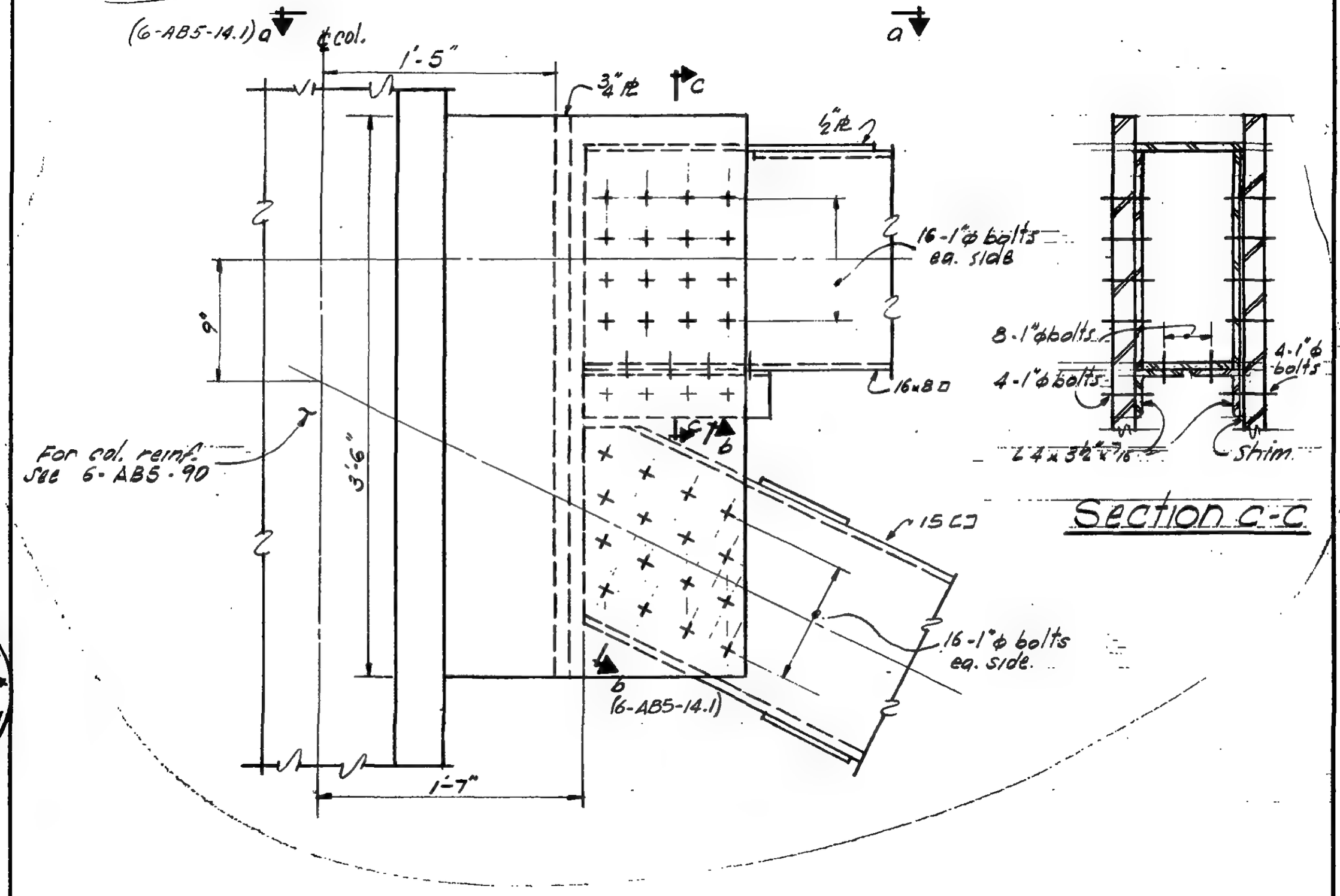

Section C-C

LESLIE E. ROBERTSON — No. 34360 — REGISTERED PROFESSIONAL ENGINEER — UNIVERSITY OF THE STATE OF NEW YORK

6-AB5-15

WORTHINGTON, SKILLING, HELLE & JACKSON — Civil & Structural Engineers

PROJECT THE WORLD TRADE CENTER | TITLE CONNECTION DETAIL 818 A | DATE 7-14-67

REVISIONS

8-14-67
9-29-67

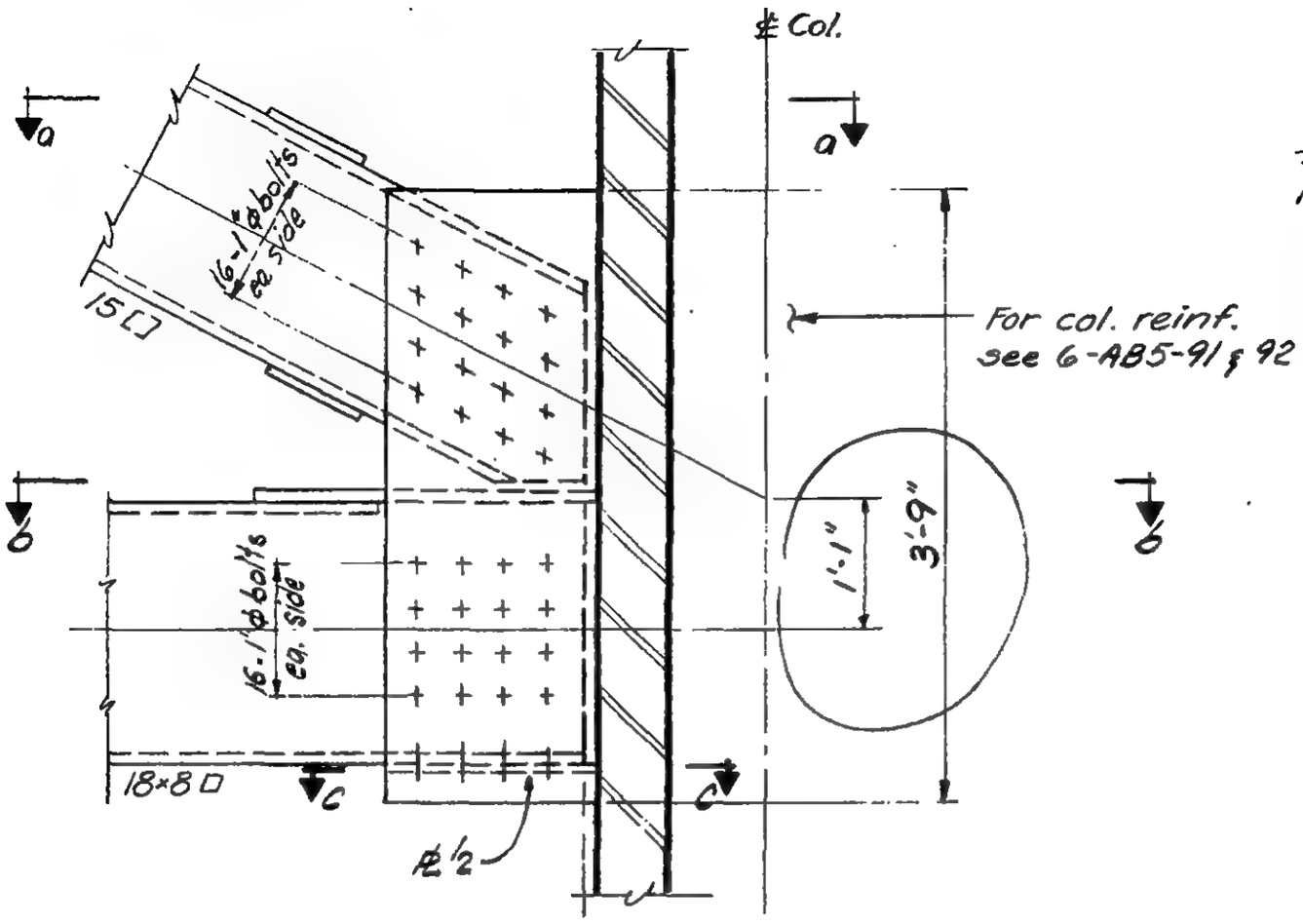

Section d-d

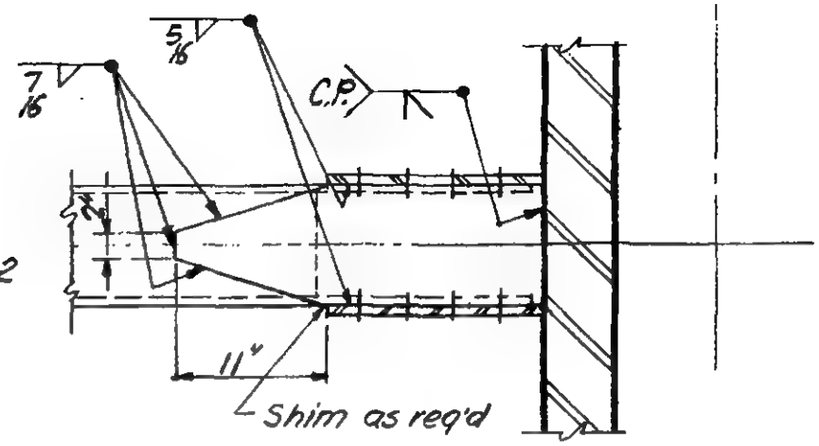

Plan b-b

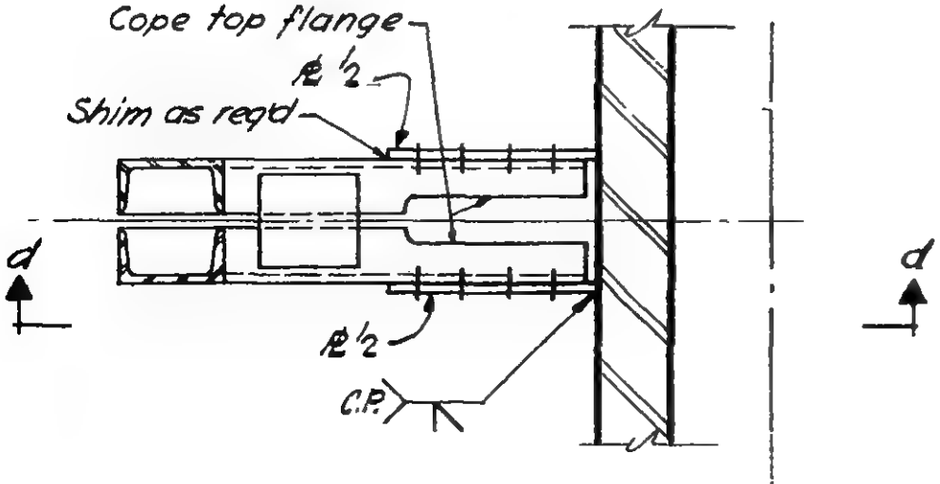

Plan a-a

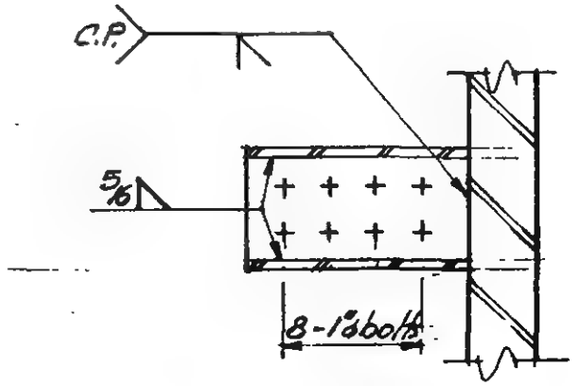

PLAN C-C

LICENSED PROFESSIONAL ENGINEER
LESLIE E. ROBERTSON
No. 34360
UNIVERSITY OF THE STATE OF NEW YORK

6-ABS-16

WORTHINGTON, SKILLING, HELLE & JACKSON — Civil & Structural Engineers

PROJECT: THE WORLD TRADE CENTER | TITLE: CONNECTION DETAIL 830 A | DATE: 7-14-67

REVISIONS
9-29-67
10-31-67
12-14-67

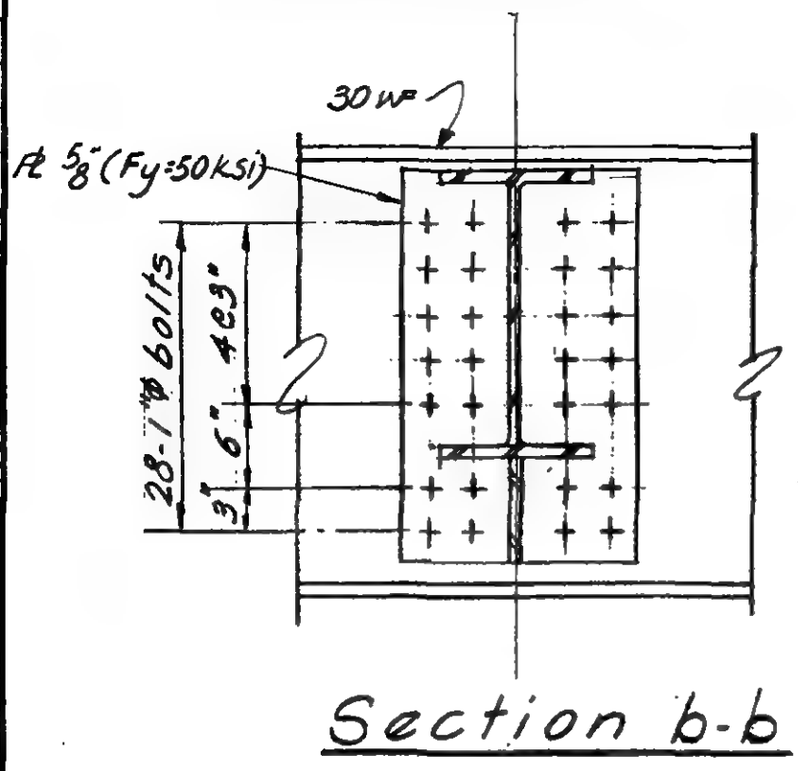

Section b-b

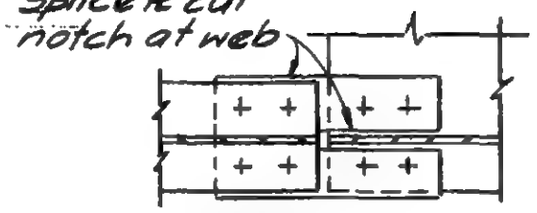

Section e-e

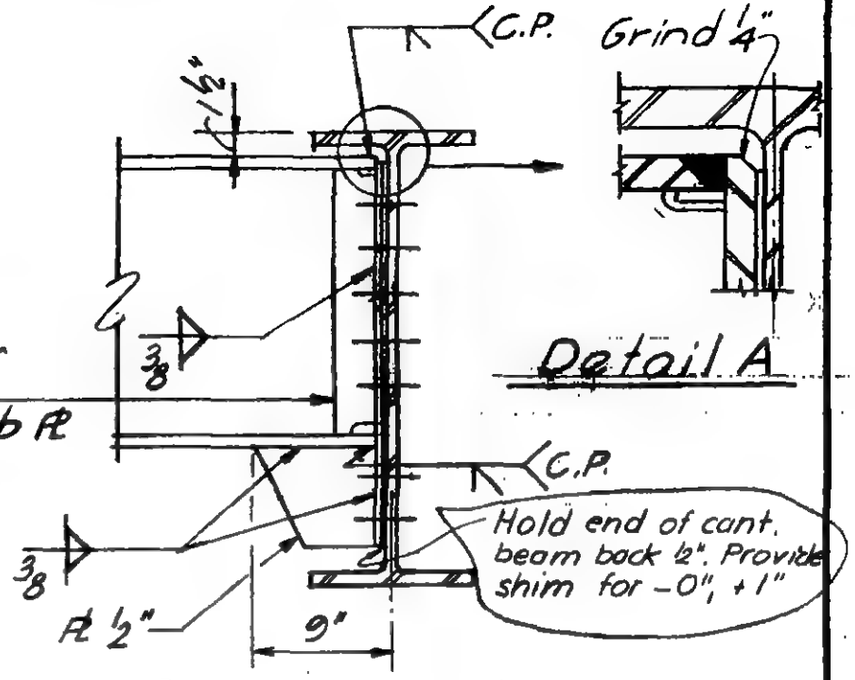

Section a-a

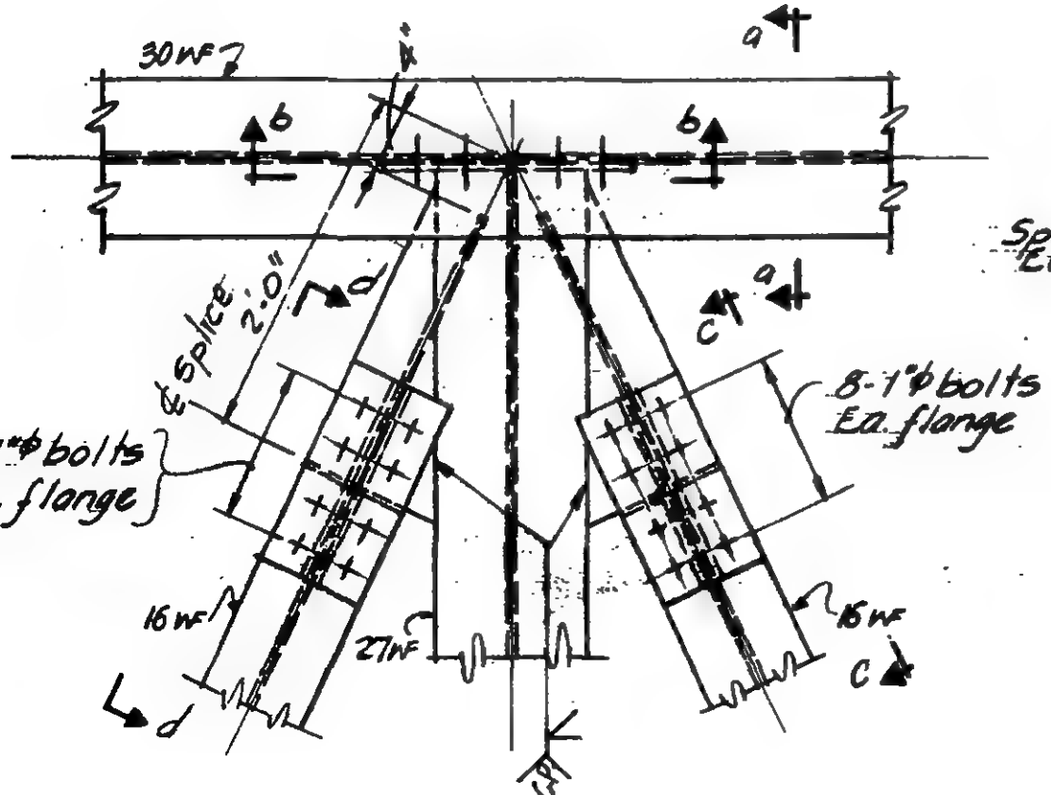

Plan

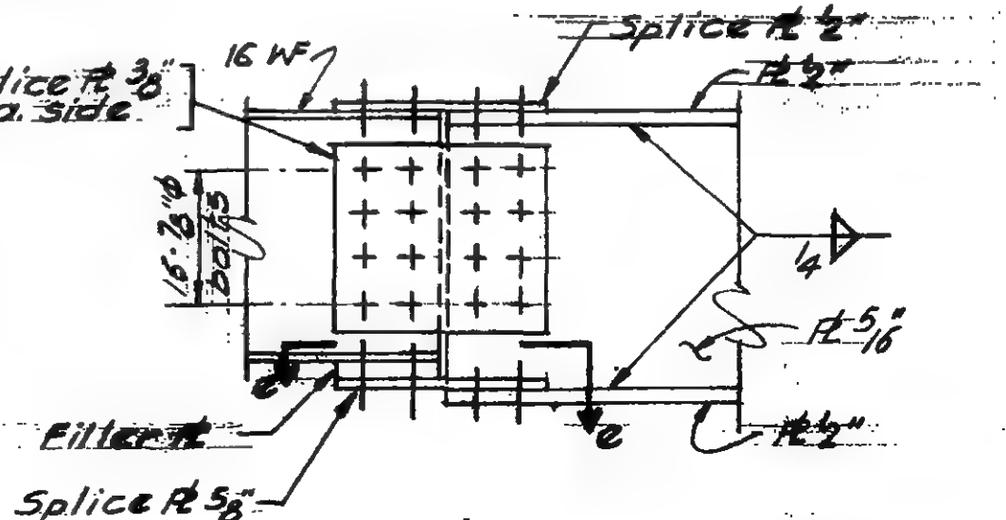

Section C-C

Section d-d (Opp. hand)

LICENSED PROFESSIONAL ENGINEER — LESLIE E. ROBERTSON — No. 34360 — STATE OF NEW YORK

6-AB5-28

WORTHINGTON, SKILLING, HELLE & JACKSON Civil & Structural Engineers

PROJECT	TITLE	DATE
THE WORLD TRADE CENTER	CONNECTION DETAIL 831 A	7-14-67

REVISIONS

9-29-67
10-31-67
12-14-67

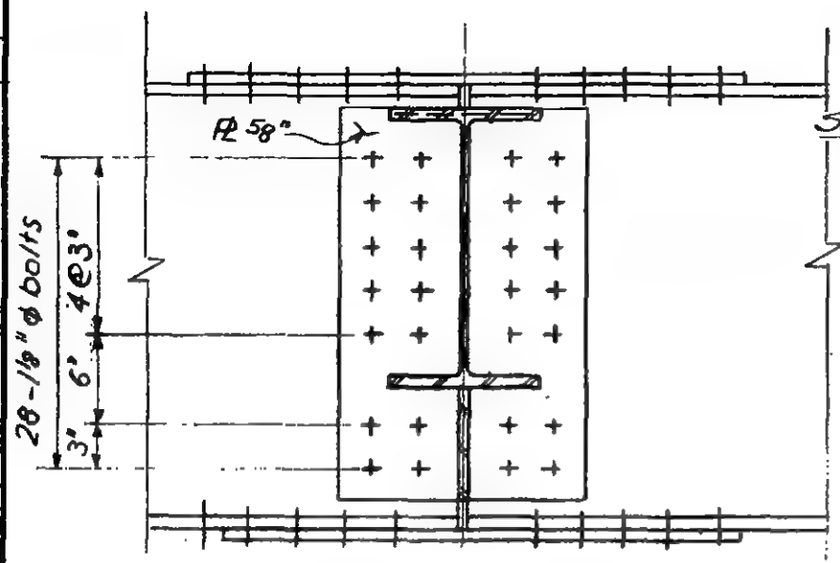

Section a-a

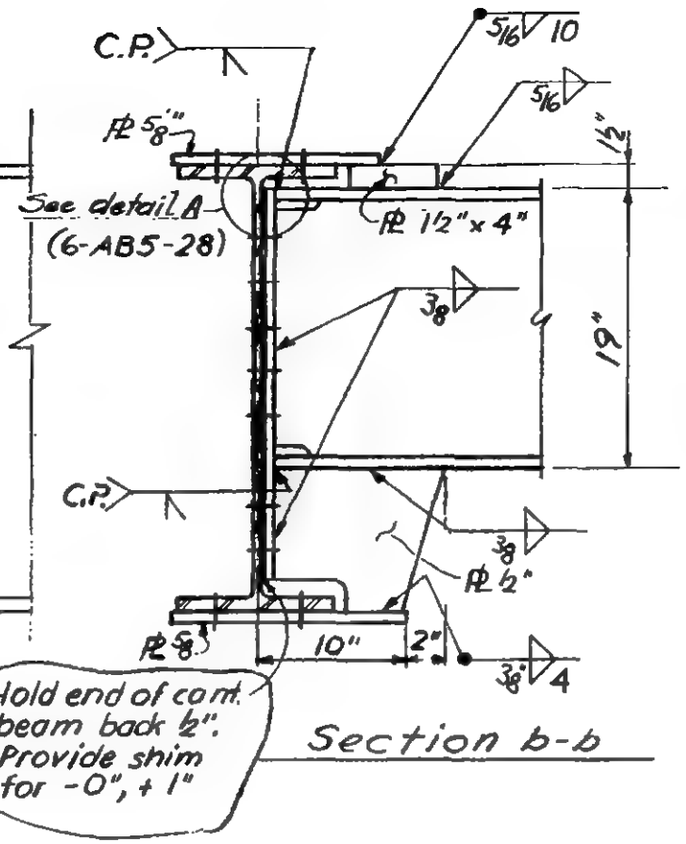

Section b-b

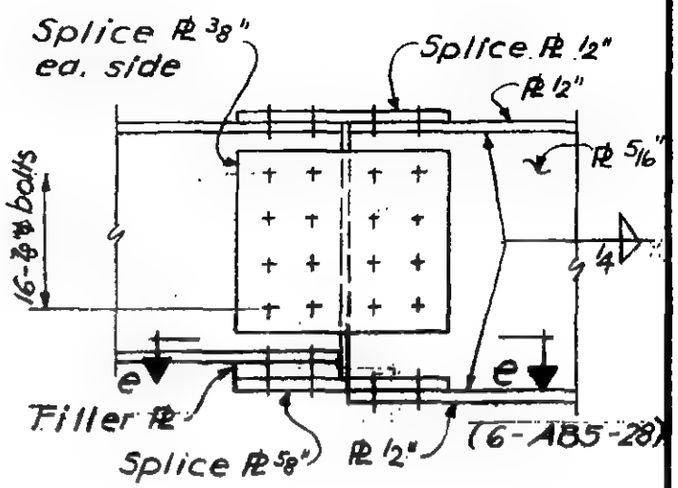

Section c-c

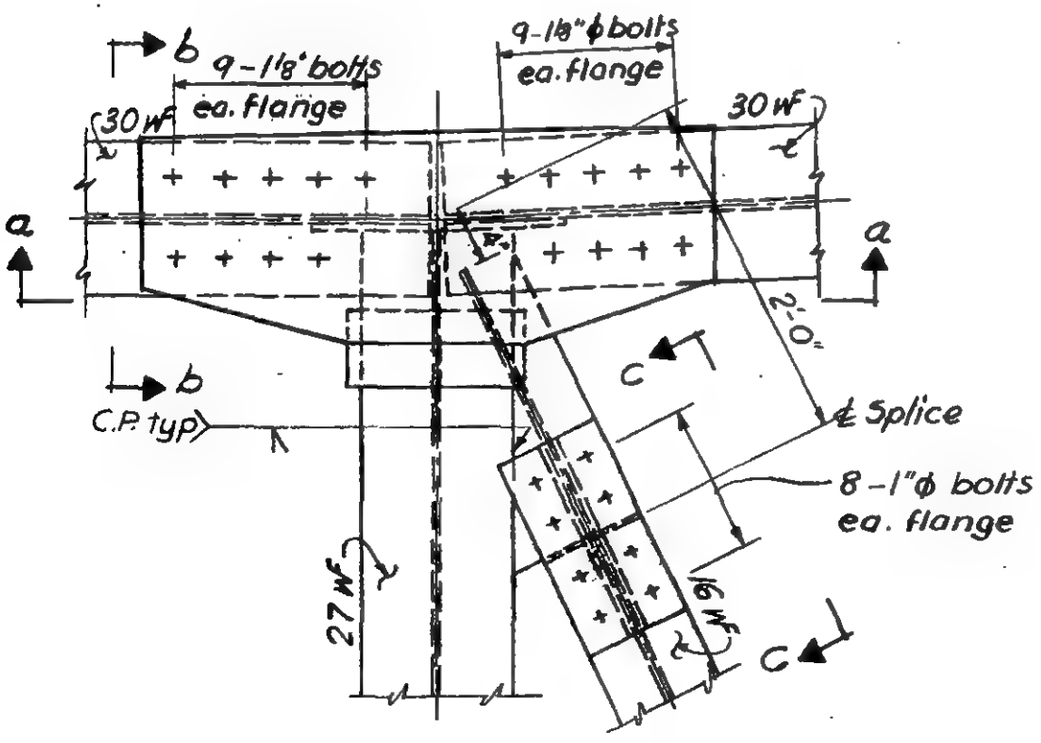

Plan

LICENSED PROFESSIONAL ENGINEER
LESLIE E. ROBERTSON
No. 34360
UNIVERSITY OF THE STATE OF NEW YORK

6-AB5-29

WORTHINGTON, SKILLING, HELLE & JACKSON — Civil & Structural Engineers

PROJECT: THE WORLD TRADE CENTER | TITLE: CONNECTION DETAIL 832 A, B | DATE: 7-14-67

REVISIONS
9-29-67
12-14-67

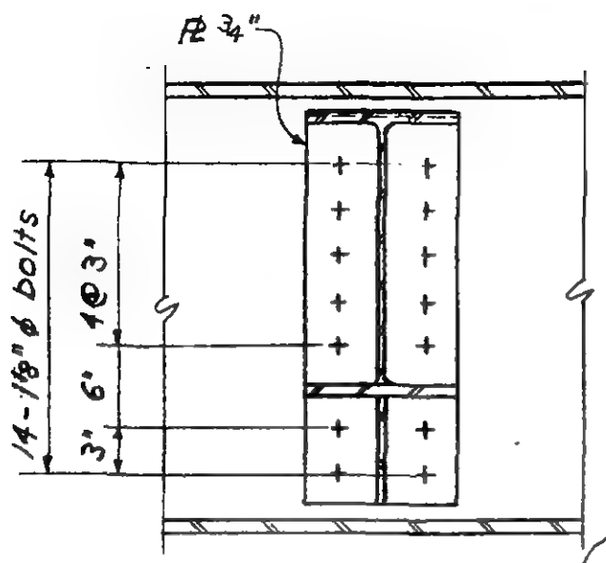

Section a-a

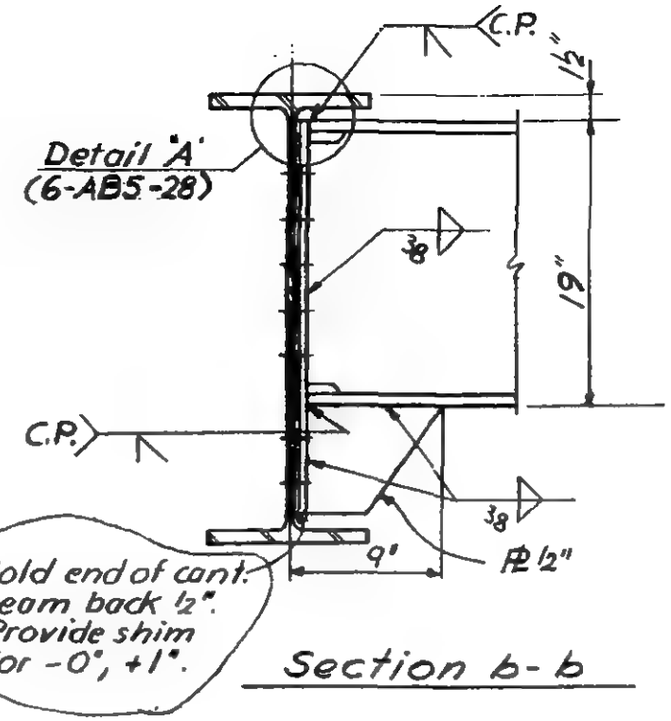

Section b-b

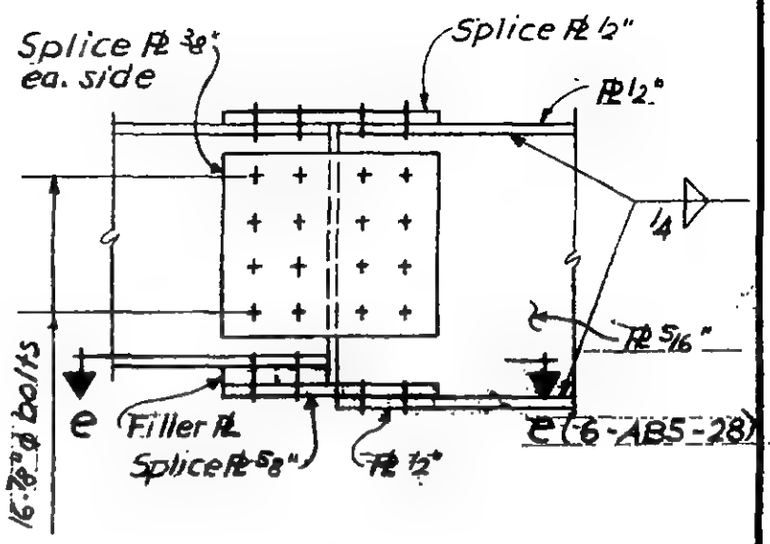

Section c-c

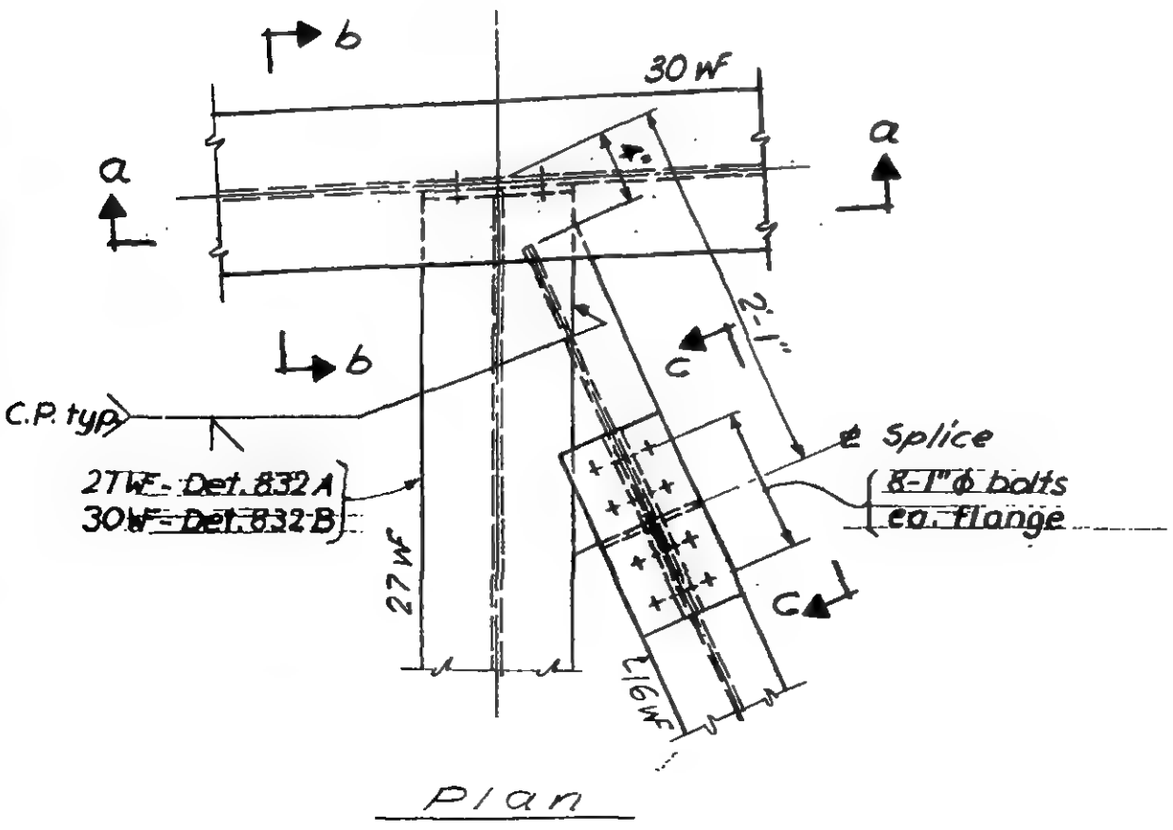

Plan

LICENSED PROFESSIONAL ENGINEER
LESLIE E. ROBERTSON
No. 34360
UNIVERSITY OF THE STATE OF NEW YORK

6-AB5-30

SKILLING - HELLE - CHRISTIANSEN - ROBERTSON Structural & Civil Engineers

PROJECT THE WORLD TRADE CENTER | TITLE CONNECTION DETAIL 832C | DATE 9-29-67

REVISIONS

12-14-67

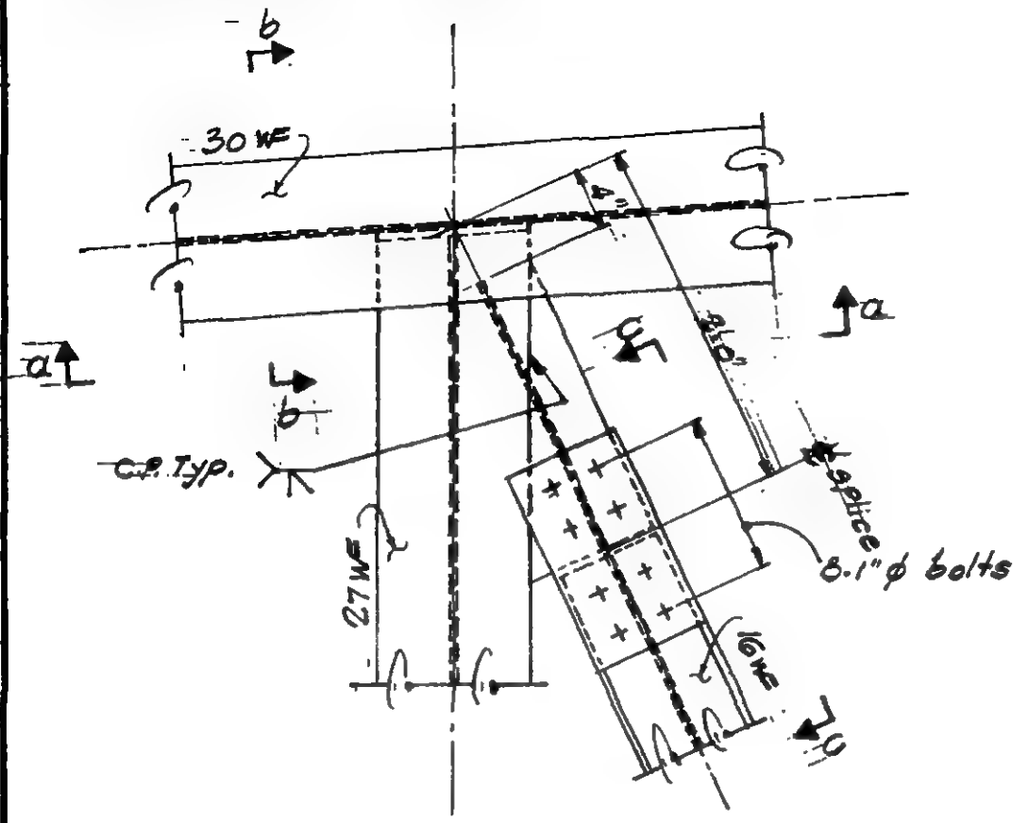

PLAN

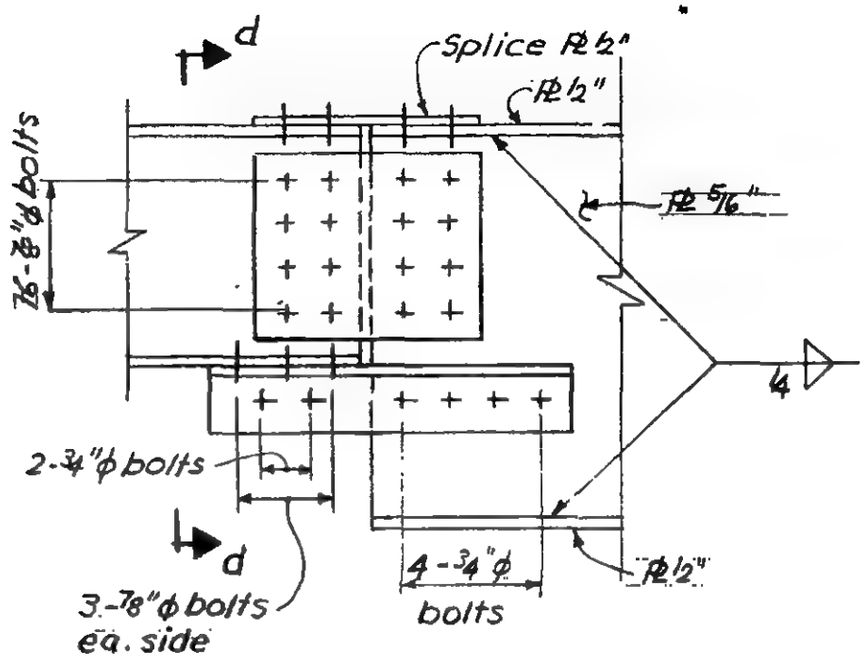

Section c-c

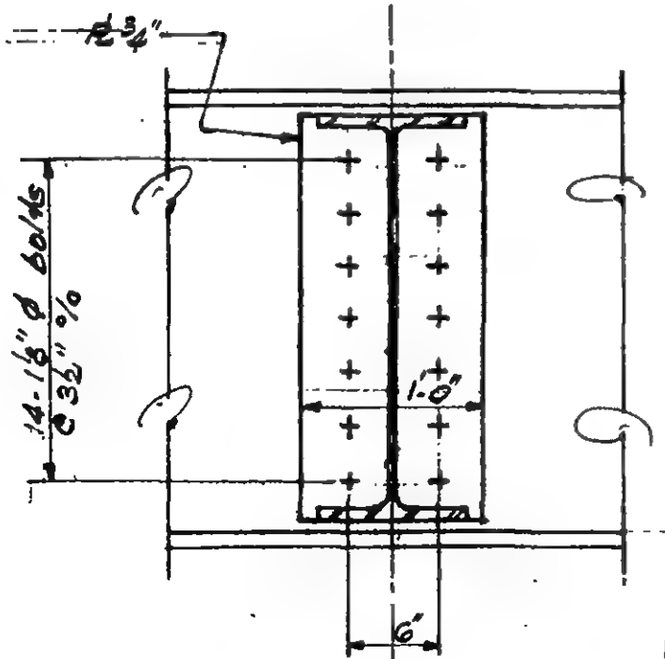

Section a-a

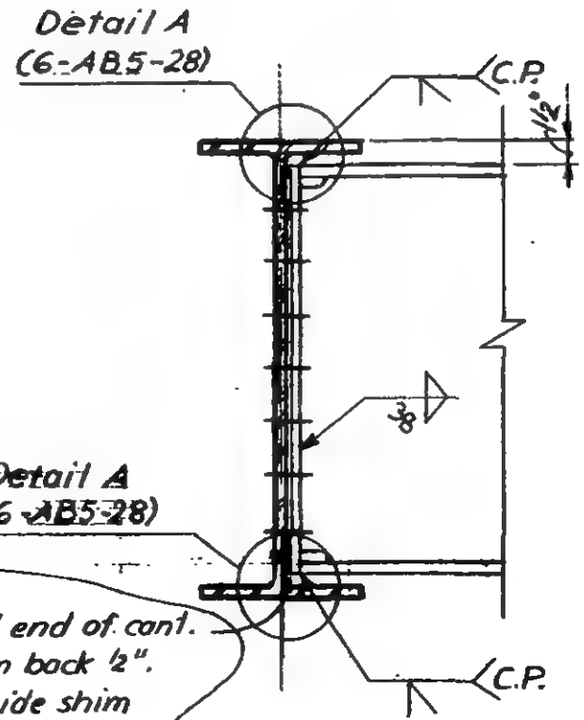

Section b-b

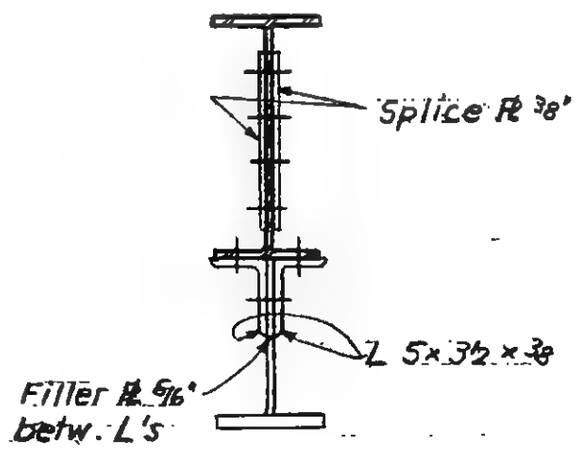

Section d-d

6-AB5-30.1

LICENSED PROFESSIONAL ENGINEER
LESLIE E. ROBERTS
No. 34360
UNIVERSITY OF THE STATE OF NE

WORTHINGTON, SKILLING, HELLE & JACKSON — Civil & Structural Engineers

PROJECT: THE WORLD TRADE CENTER | TITLE: CONNECTION DETAIL 833A | DATE: 7-14-67

REVISIONS
9-29-67
12-14-67

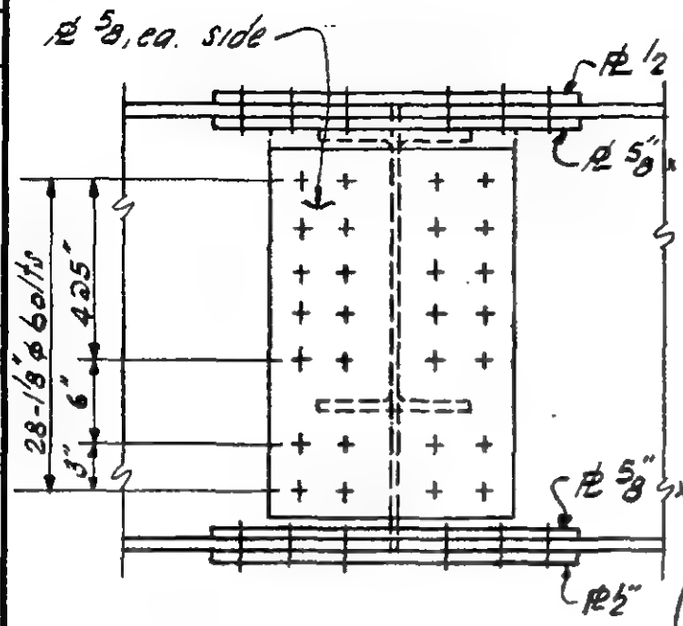

Section a-a

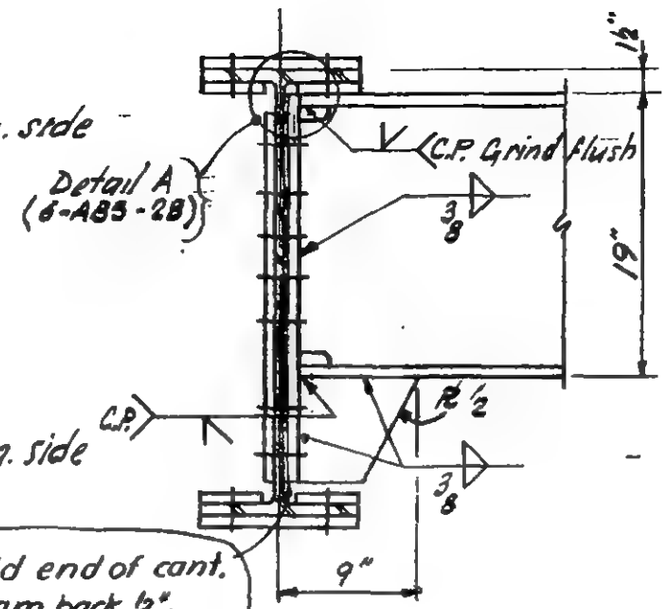

Section b-b

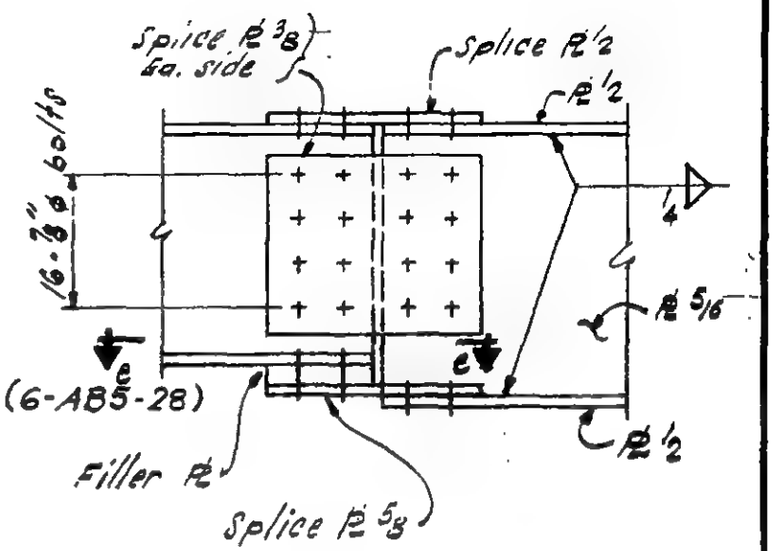

Section c-c

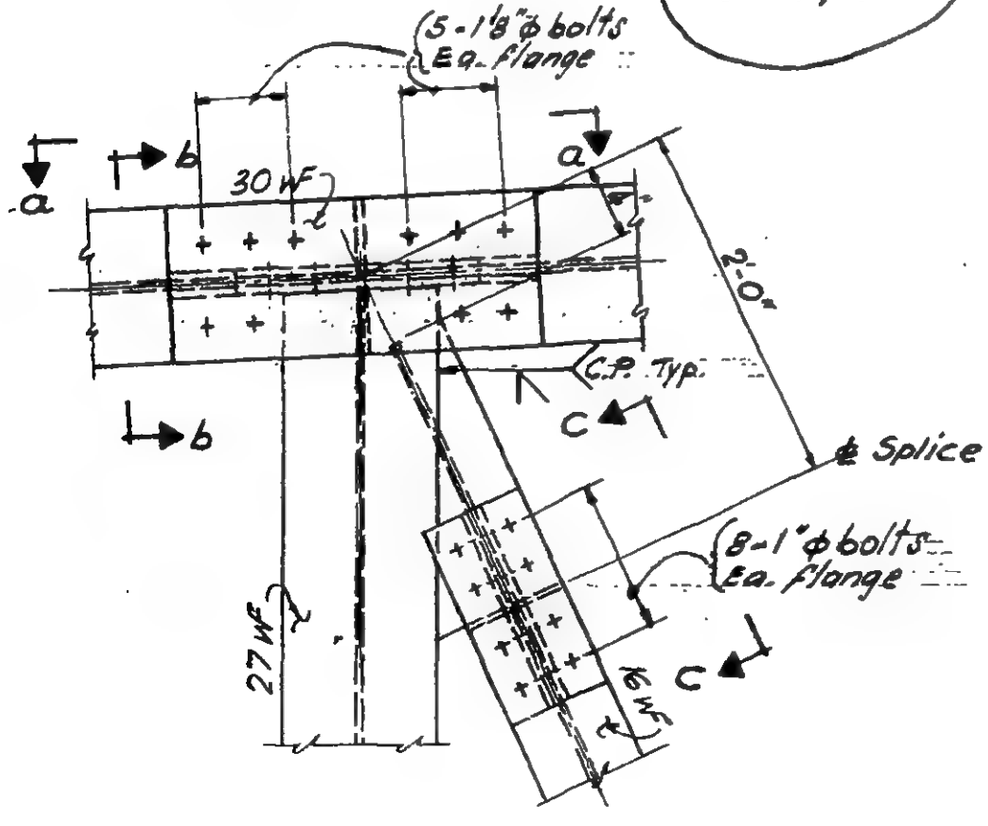

Plan

LESLIE E. ROBERTSON — No. 34360 — REGISTERED PROFESSIONAL ENGINEER — UNIVERSITY OF THE STATE OF NEW YORK

6-AB5-31

SKILLING - HELLE - CHRISTIANSEN - ROBERTSON — Structural & Civil Engineers

PROJECT THE WORLD TRADE CENTER | TITLE CONNECTION DETAIL 833B | DATE 9-29-67

REVISIONS
10-31-67
12-14-67

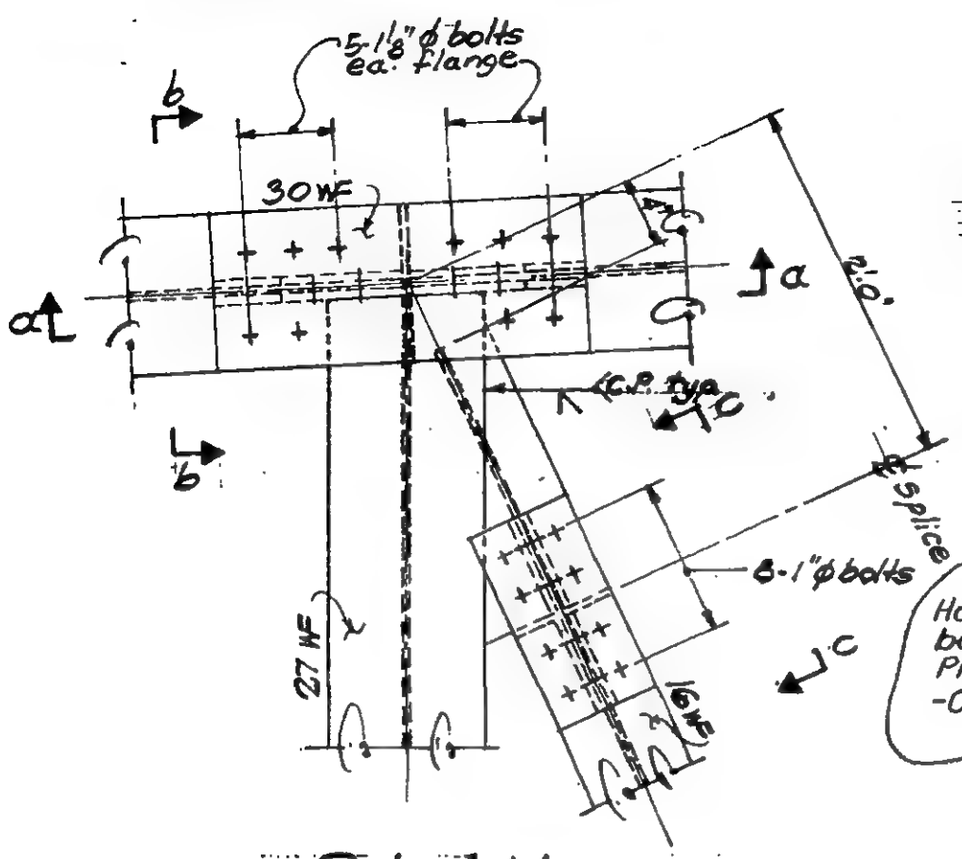

PLAN

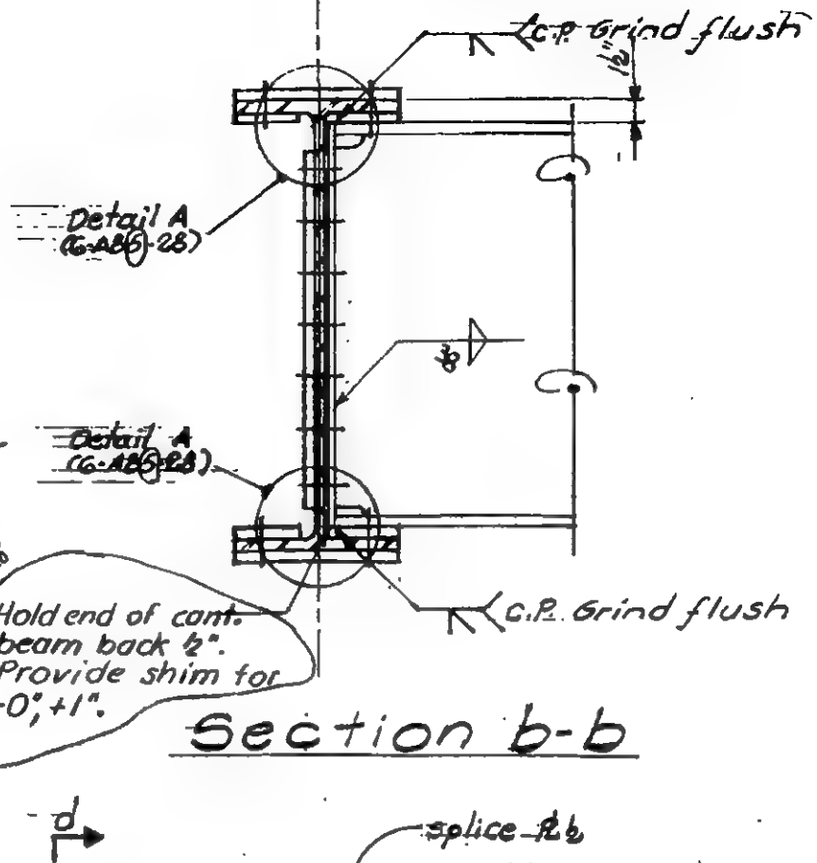

Section b-b

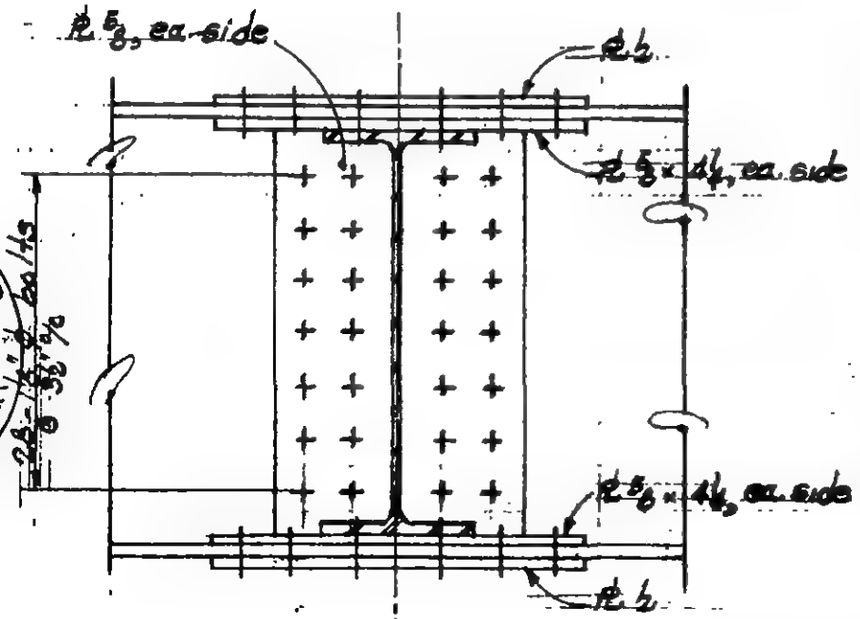

Section a-a

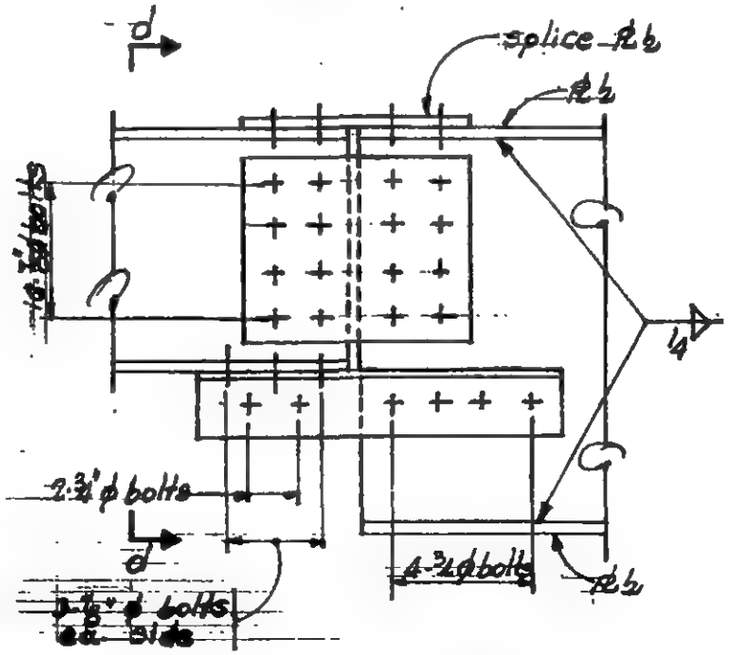

Section c-c

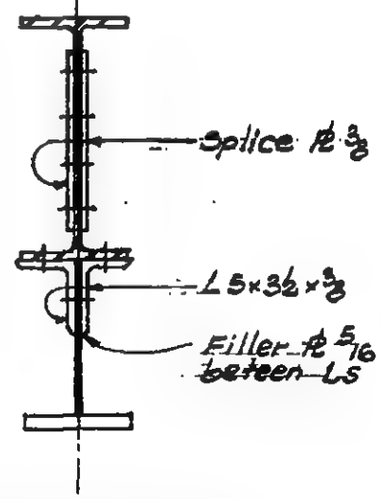

Section d-d

REGISTERED PROFESSIONAL ENGINEER
LESLIE E. ROBERTSON
No. 34360
UNIVERSITY OF THE STATE OF NEW YORK

G-AB5-31.1

WORTHINGTON, SKILLING, HELLE & JACKSON — Civil & Structural Engineers

PROJECT THE WORLD TRADE CENTER | TITLE CONNECTION DETAIL 834 A | DATE 7-14-67

REVISIONS
9-29-67
12-14-67

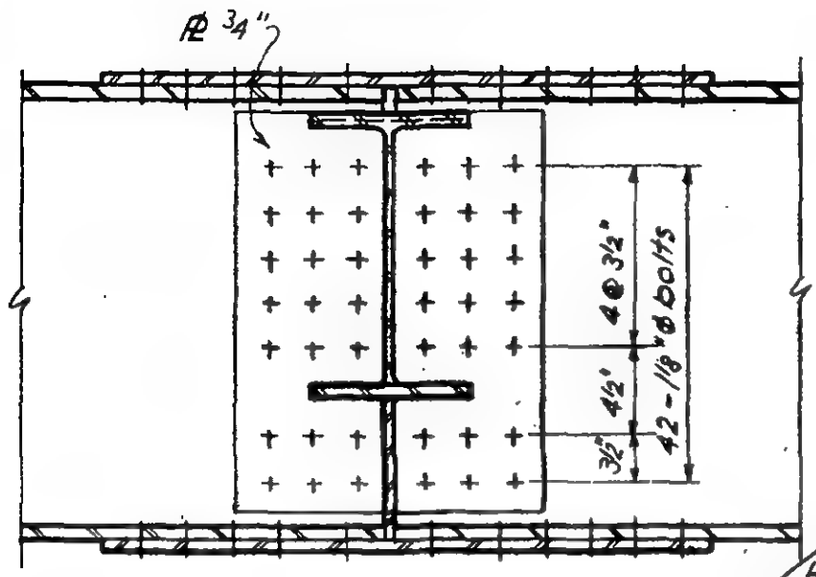

Section a-a

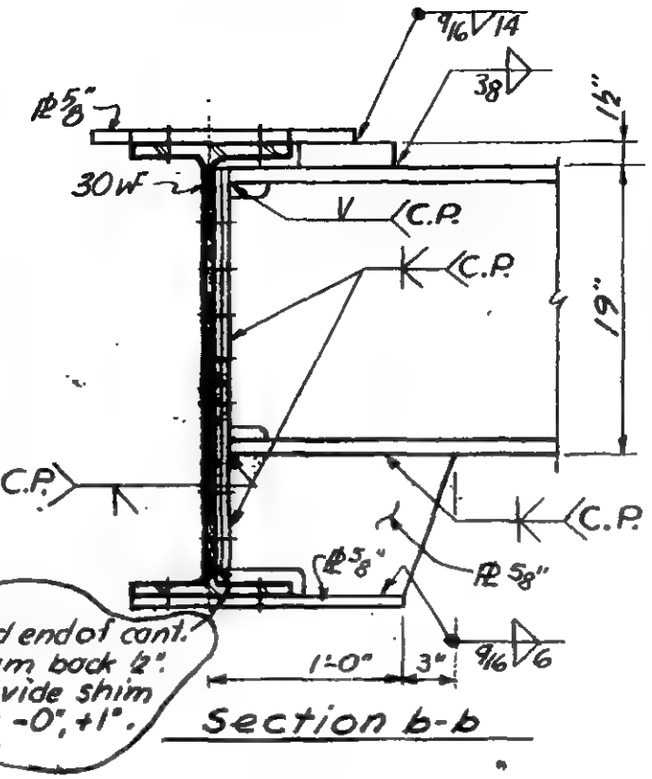

Section b-b

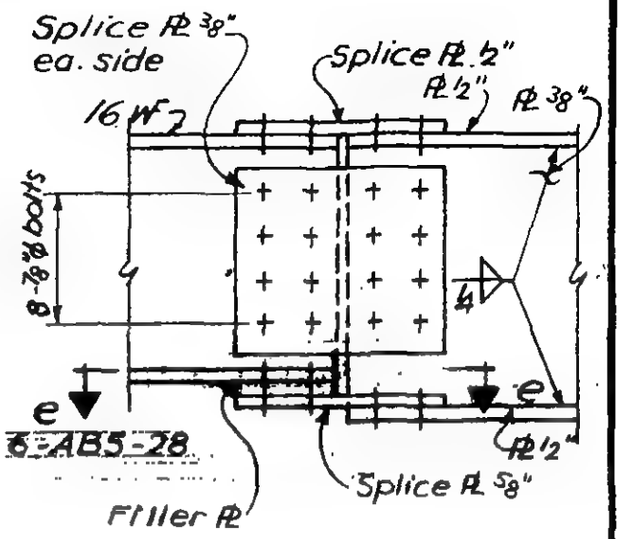

Section c-c

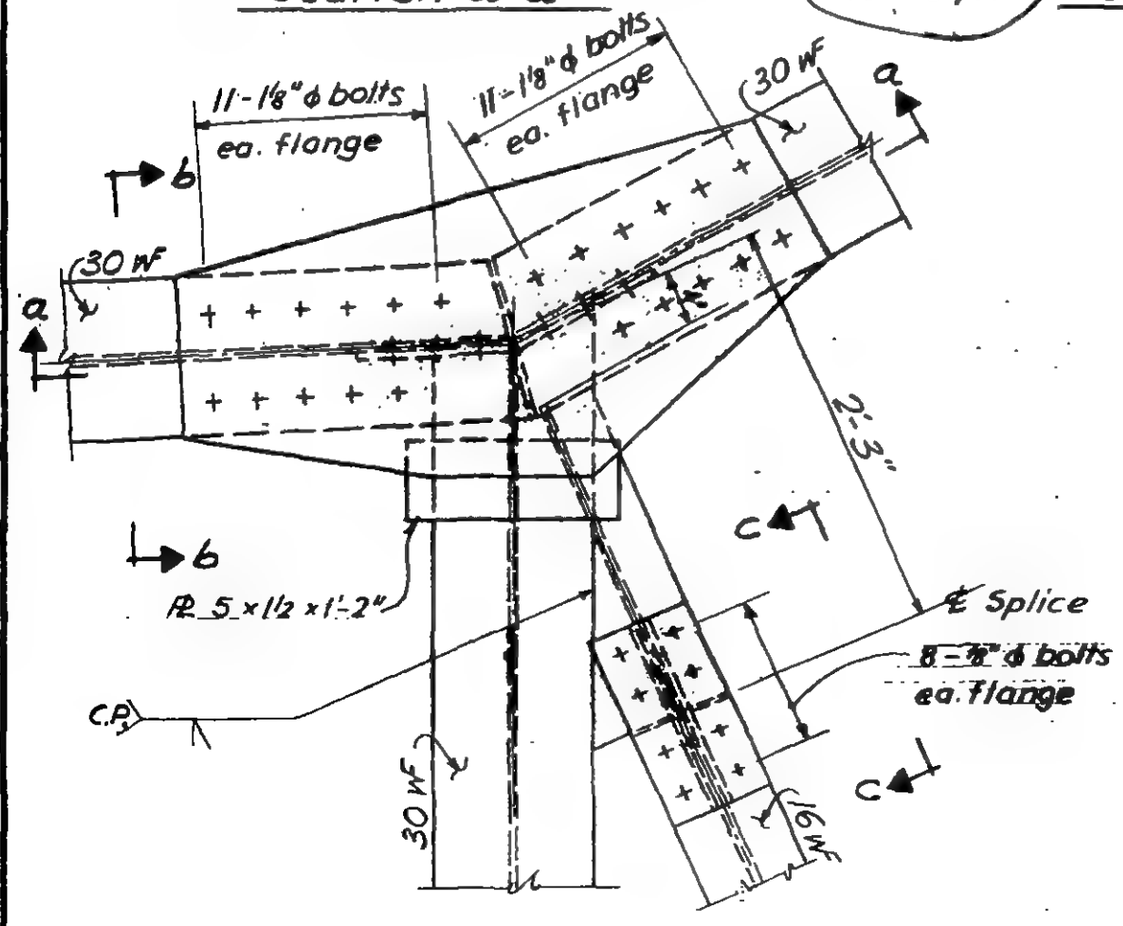

Plan

LICENSED PROFESSIONAL ENGINEER
LESLIE E. ROBERTSON
No. 34360
UNIVERSITY OF THE STATE OF NEW YORK

6-AB5-32

SKILLING - HELLE - CHRISTIANSEN - ROBERTSON — Structural & Civil Engineers

PROJECT THE WORLD TRADE CENTER | TITLE CONNECTION DETAIL 834B | DATE 9-29-67

EVISIONS

12-14-67

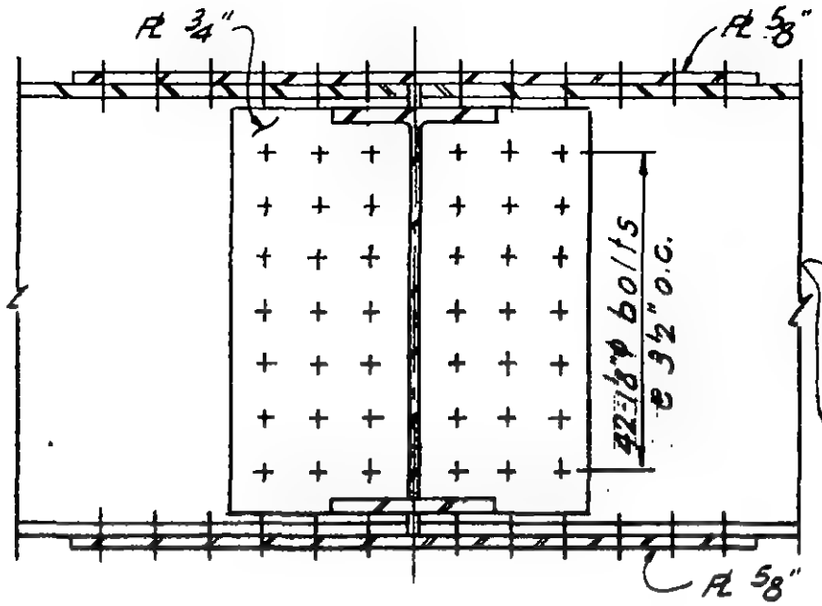

Section a-a

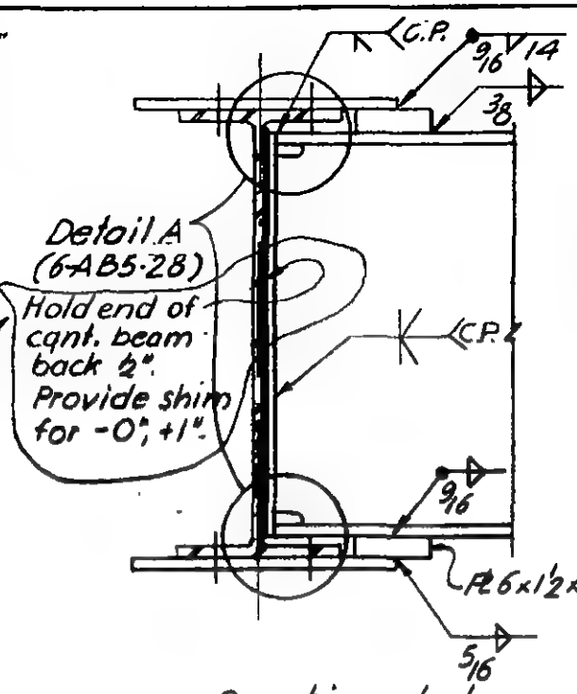

Section b-b

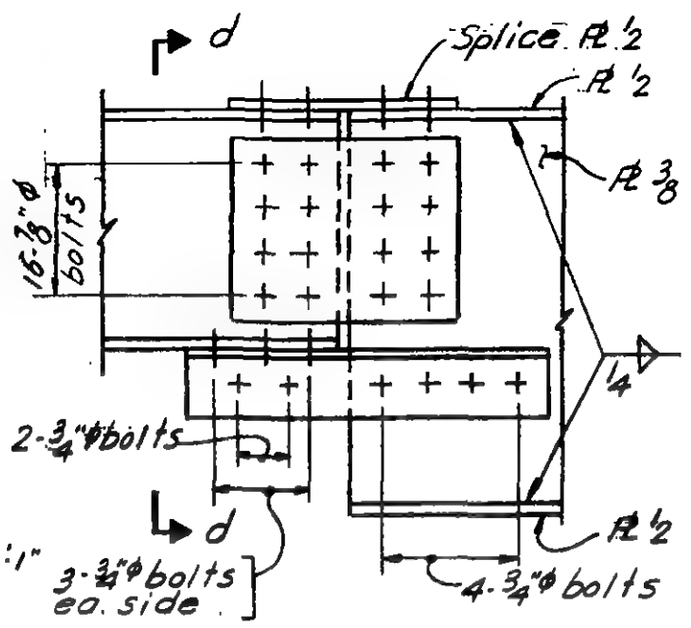

Section c-c

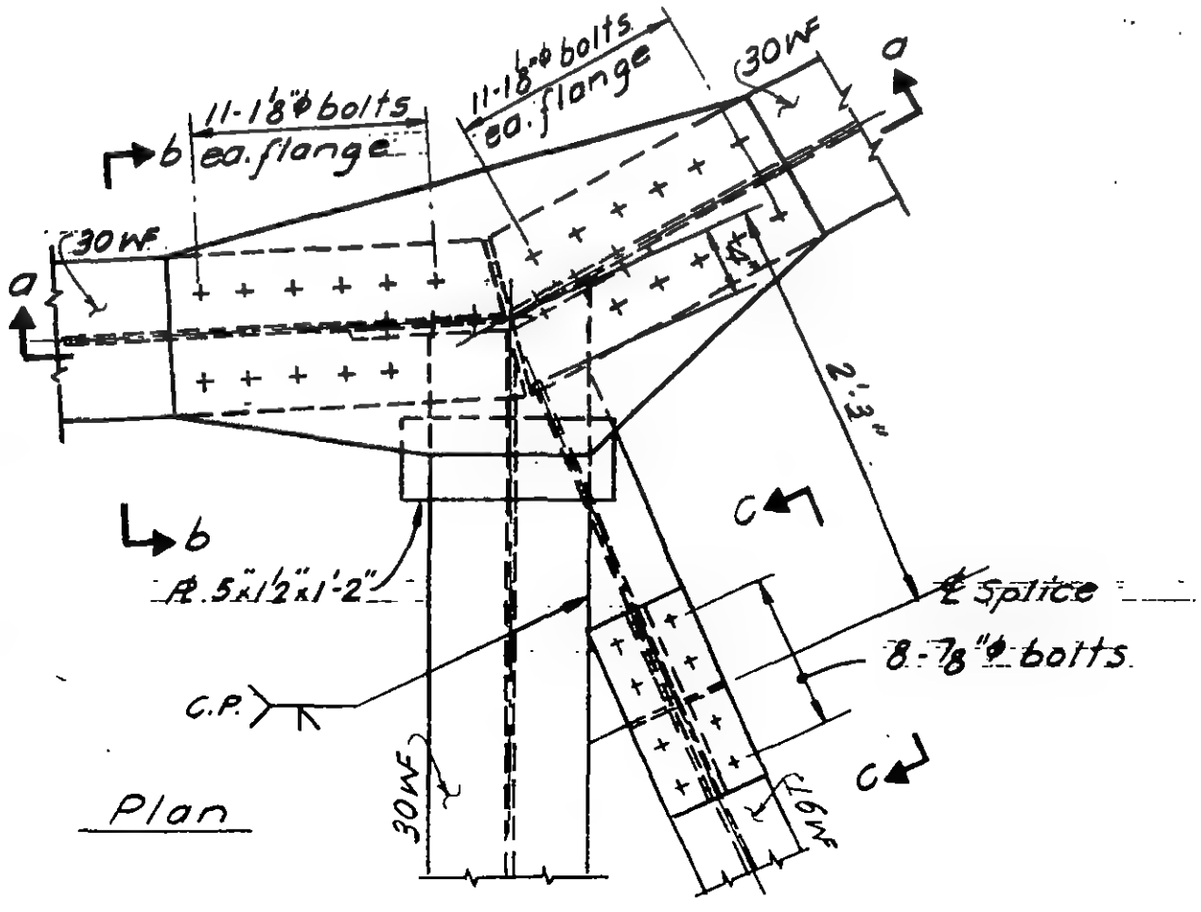

Plan

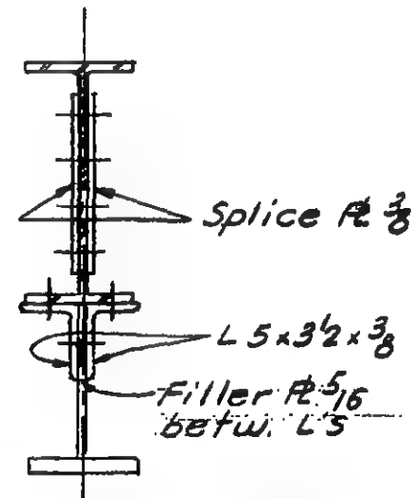

Section d-d

LICENSED PROFESSIONAL ENGINEER
LESLIE E. ROBERTSON
No. 34360
UNIVERSITY OF THE STATE OF NEW YORK

6-AB5-32.1

WORTHINGTON, SKILLING, HELLE & JACKSON — Civil & Structural Engineers

PROJECT: THE WORLD TRADE CENTER | TITLE: CONNECTION DETAIL 835 A&B | DATE: 7-14-67

REVISIONS
9-29-67
12-14-67

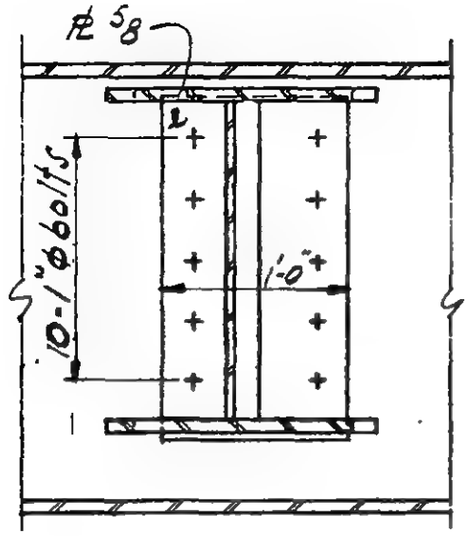

Section a-a

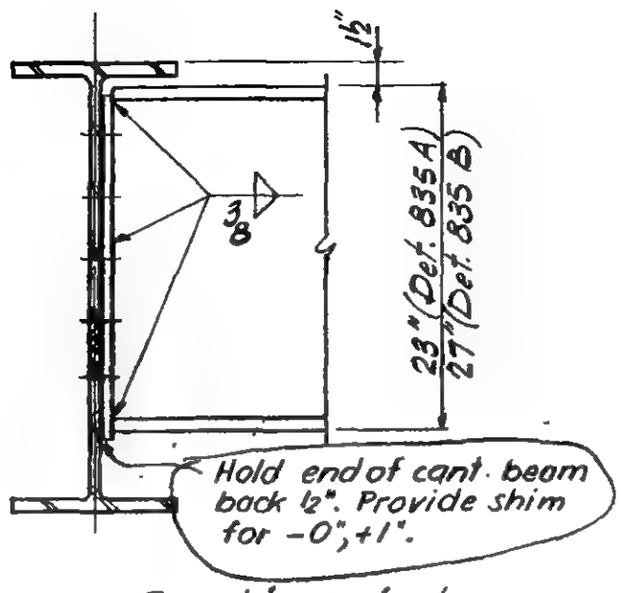

Section b-b

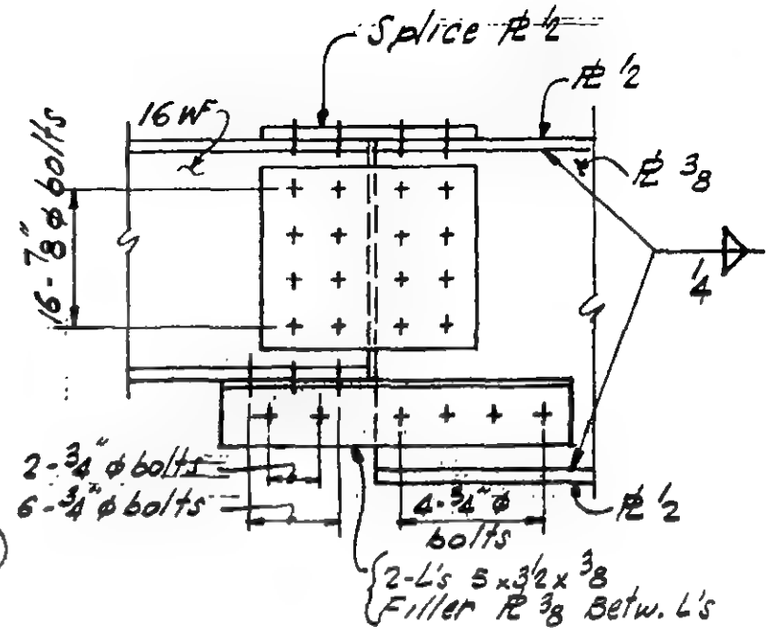

Section c-c

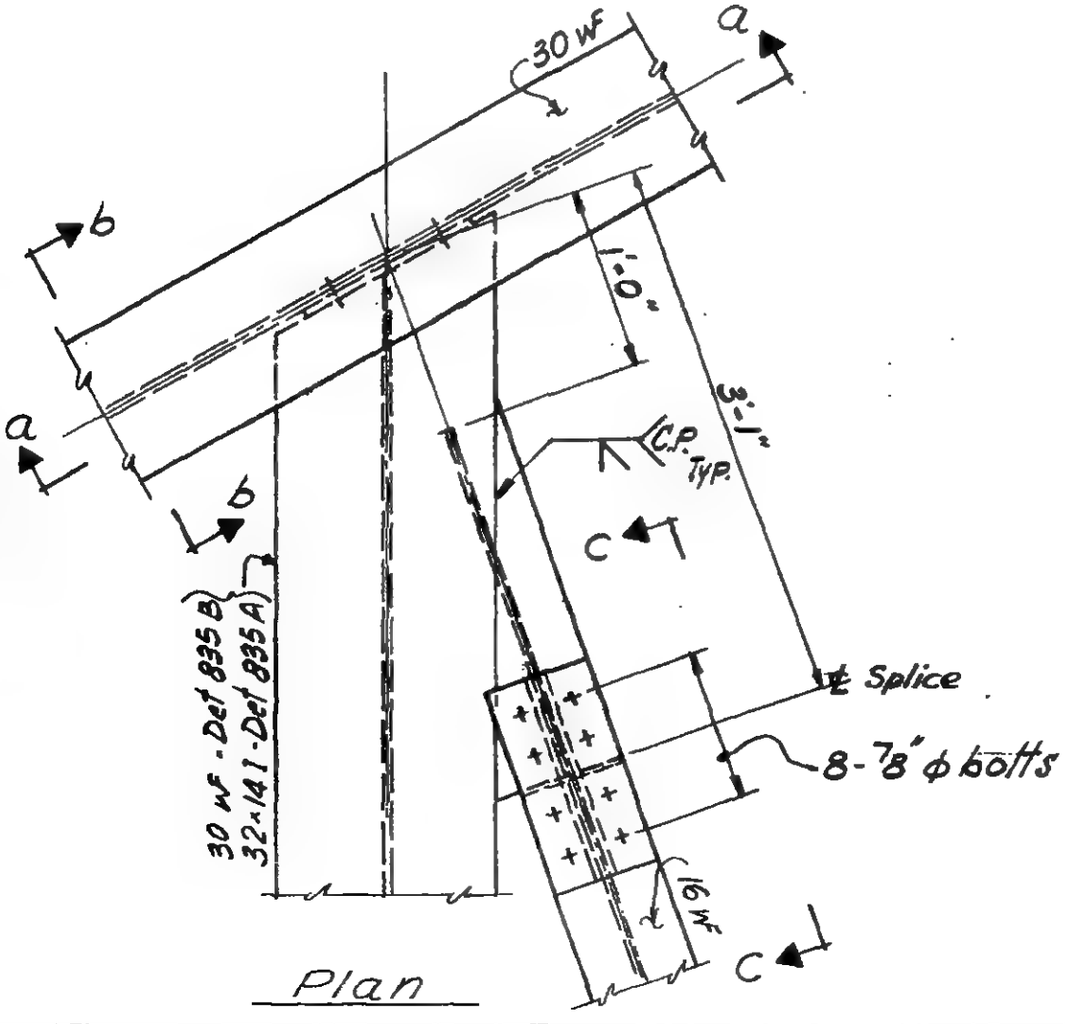

Plan

LICENSED PROFESSIONAL ENGINEER
LESLIE E. ROBERTSON
No. 34360
UNIVERSITY OF THE STATE OF NEW YORK

6-AB5-33

WORTHINGTON, SKILLING, HELLE & JACKSON — Civil & Structural Engineers

PROJECT: THE WORLD TRADE CENTER | TITLE: CONNECTION DETAIL 836(A) | DATE: 7-14-67

REVISIONS
9-29-67
10-31-67

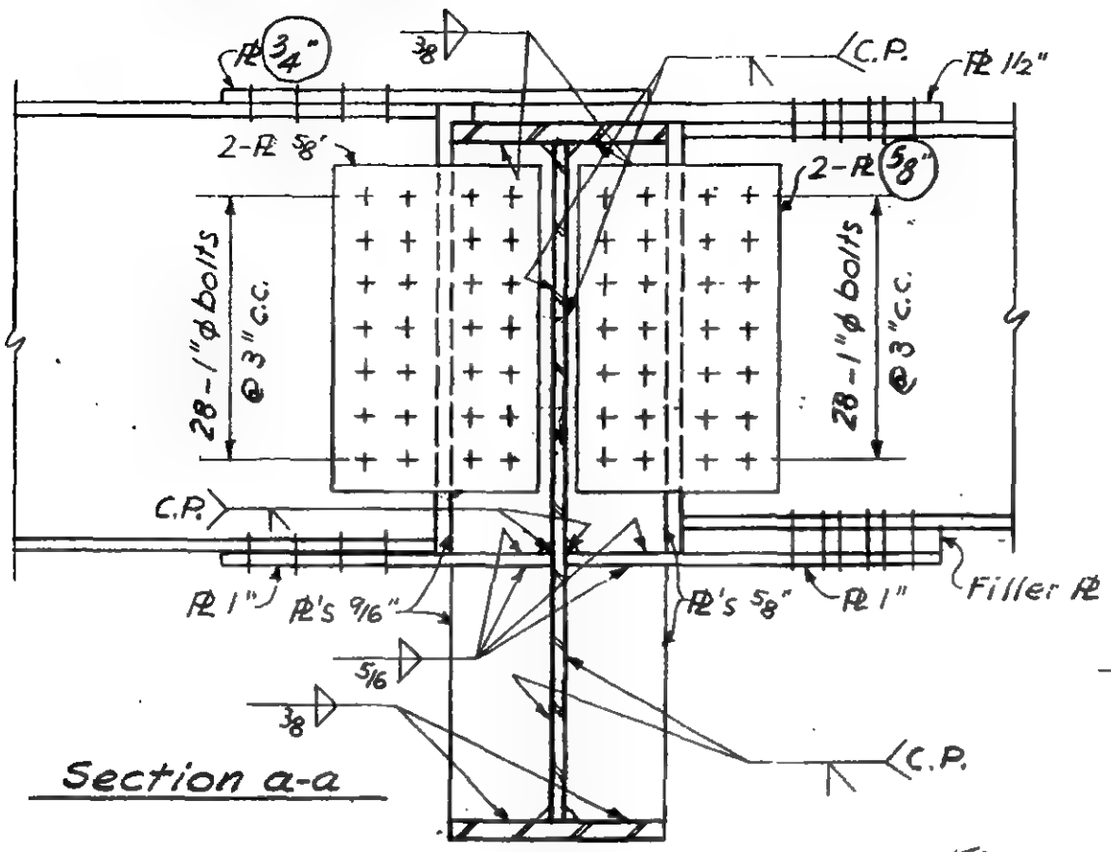

Section a-a

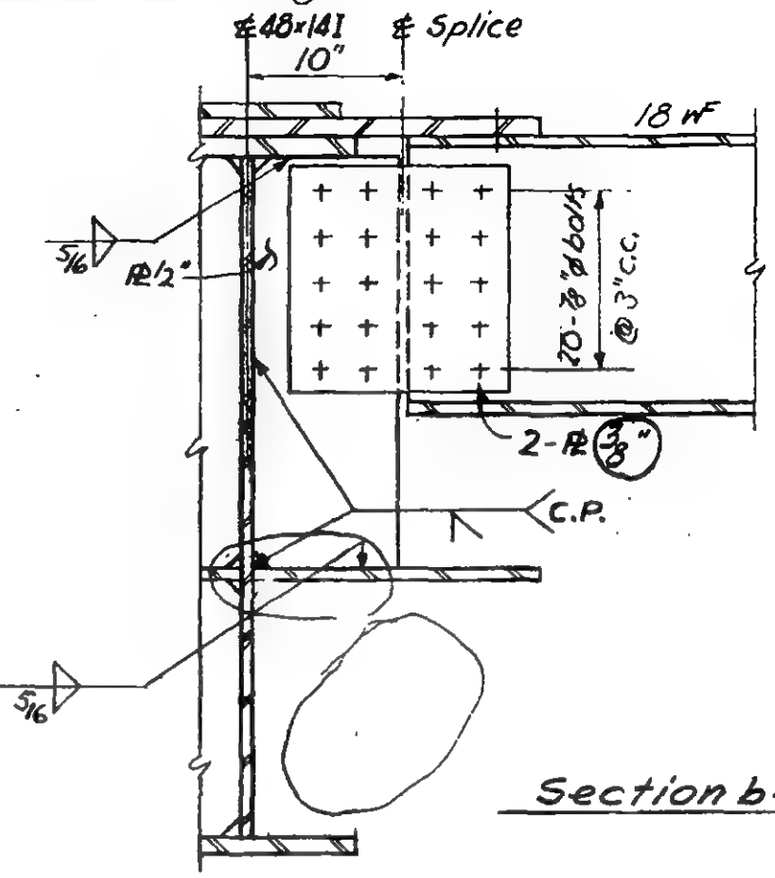

Section b-b

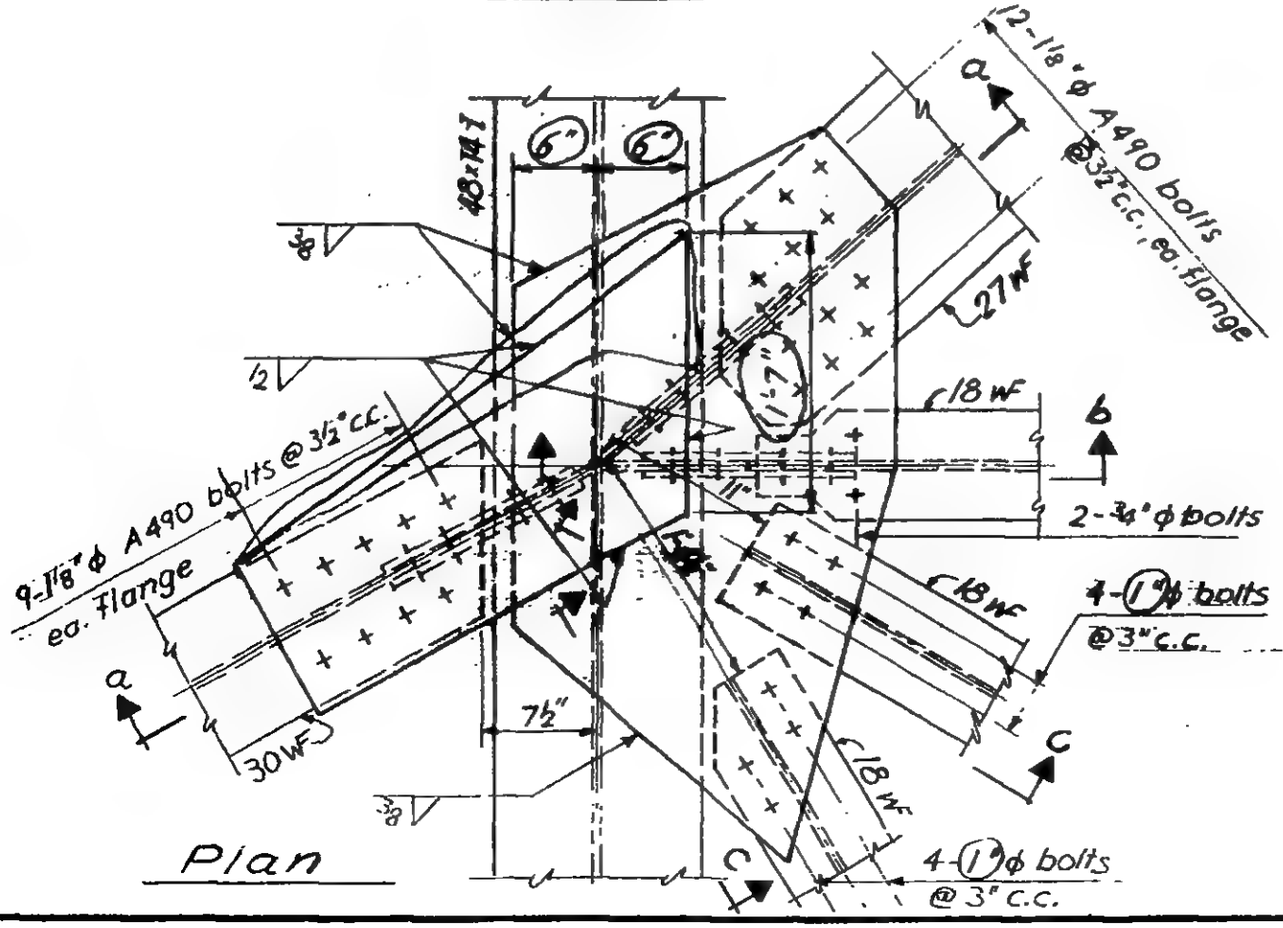

Plan

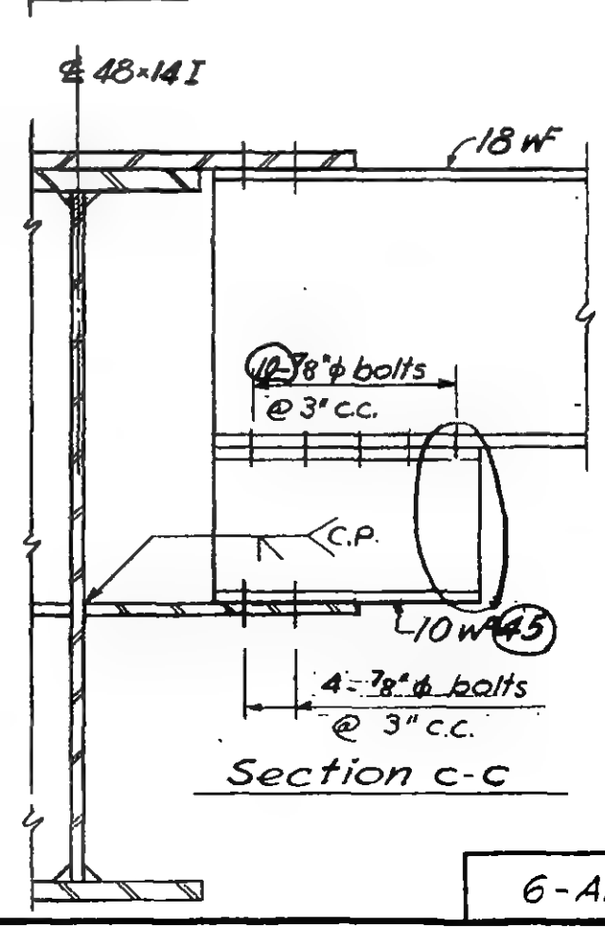

Section c-c

6-AB5-34

REGISTERED PROFESSIONAL ENGINEER
LESLIE E. ROBERTSON
No. 24320
STATE OF NEW YORK

SKILLING - HELLE - CHRISTIANSEN - ROBERTSON Structural & Civil Engineers

PROJECT THE WORLD TRADE CENTER | TITLE CONNECTION DETAIL 837 A | DATE 9-29-67

REVISIONS

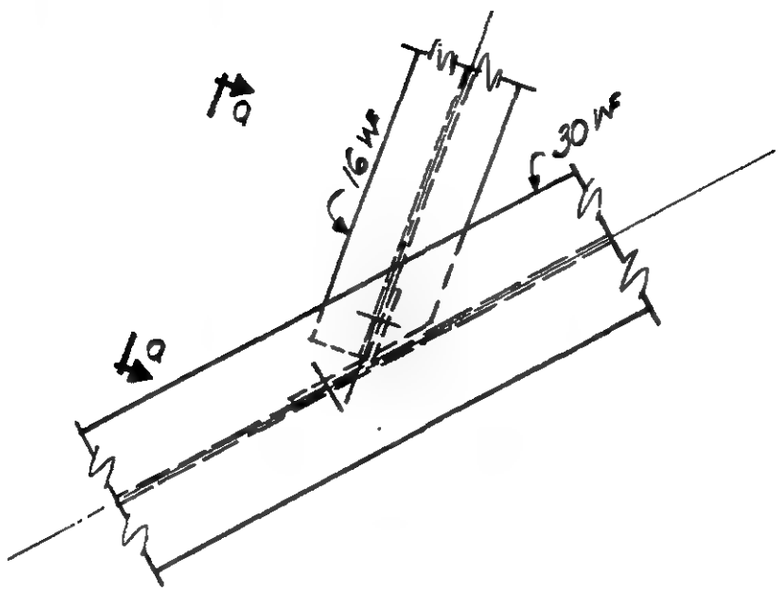

PLAN

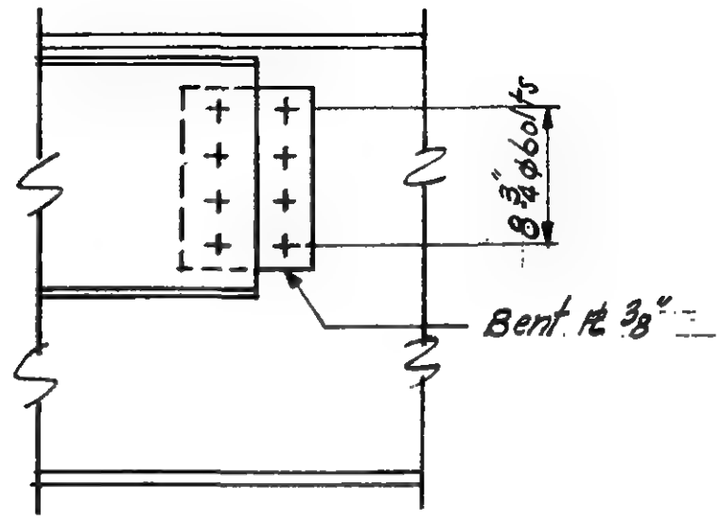

Section a-a

LICENSED PROFESSIONAL ENGINEER
LESLIE E. ROBERTSON
No. 34360
UNIVERSITY OF THE STATE OF NEW YORK

6-ABS-35

SKILLING - HELLE - CHRISTIANSEN - ROBERTSON Structural & Civil Engineers

PROJECT THE WORLD TRADE CENTER | TITLE CONNECTION DETAIL 838 A | DATE 9-29-67

REVISIONS

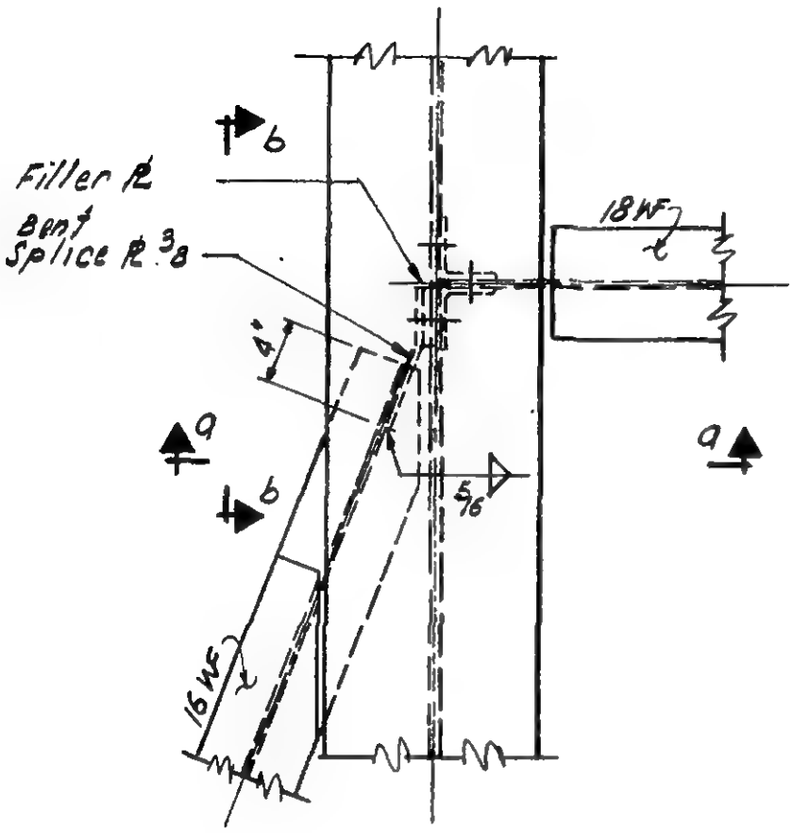

PLAN

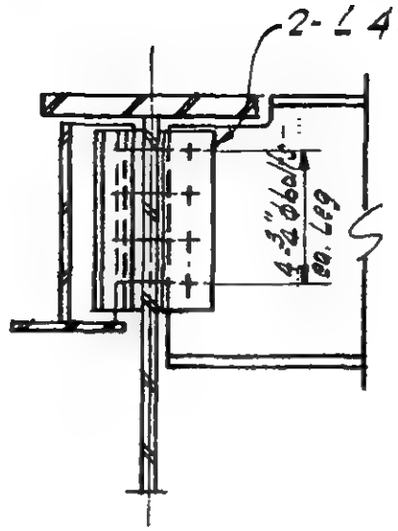

Section a-a

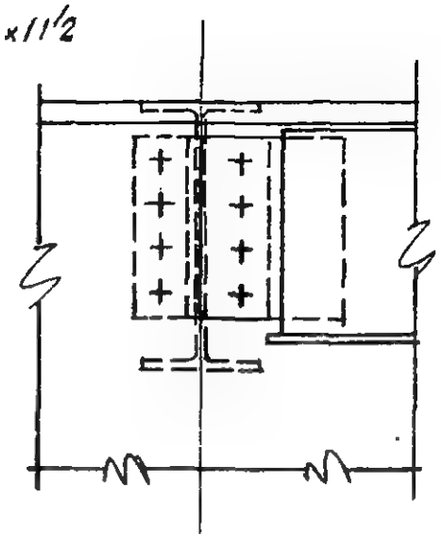

Section b-b

LICENSED PROFESSIONAL ENGINEER
LESLIE E. ROBERTSON
No. 34360
UNIVERSITY OF THE STATE OF NEW YORK

6-AB5-36

WORTHINGTON, SKILLING, HELLE & JACKSON — Civil & Structural Engineers

PROJECT THE WORLD TRADE CENTER | TITLE CONNECTION DETAIL 839A | DATE 7-14-67

REVISIONS

9-15-67

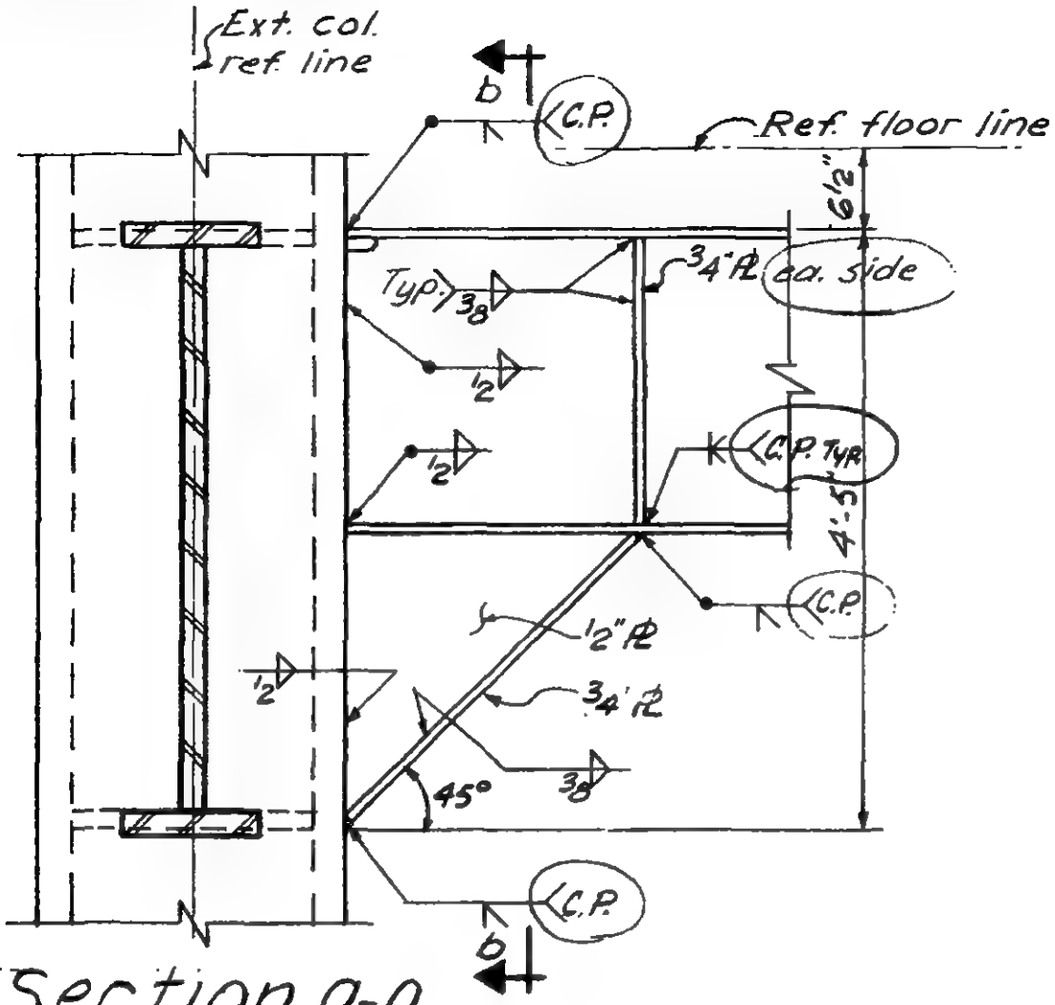

Section a-a

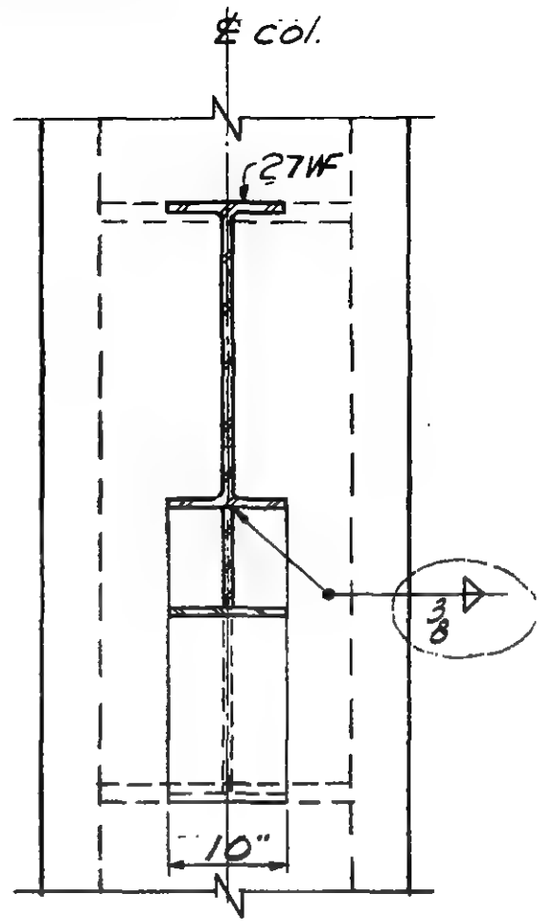

Section b-b

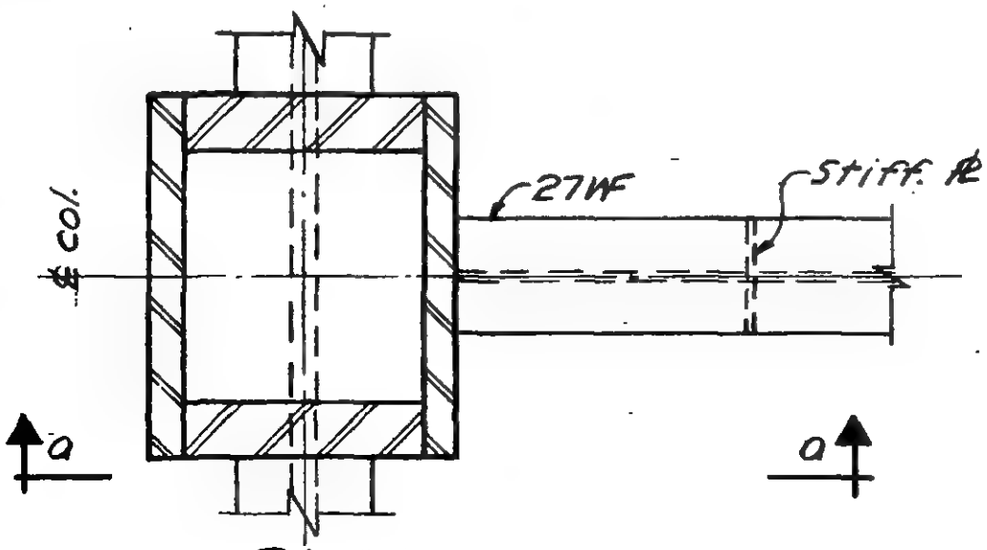

PLAN

LICENSED PROFESSIONAL ENGINEER
LESLIE E. ROBERTSON
No. 34360
UNIVERSITY OF THE STATE OF NEW YORK

6-AB5-37

WORTHINGTON, SKILLING, HELLE & JACKSON — Civil & Structural Engineers

PROJECT: THE WORLD TRADE CENTER | TITLE: CONNECTION DETAIL 840 A, B, C, & D | DATE: 7-14-67

REVISIONS
9-15-67
12-14-67

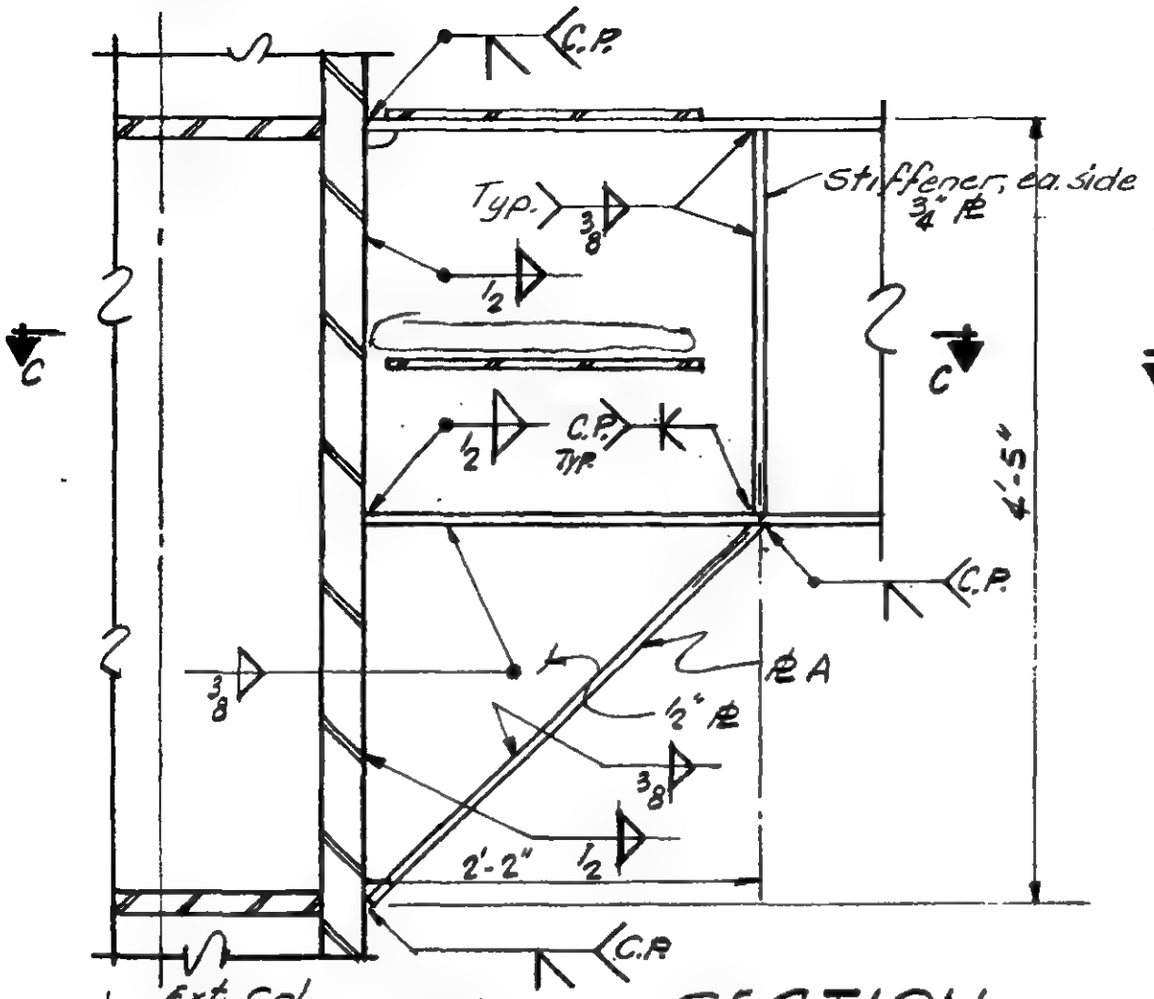

SECTION a-a

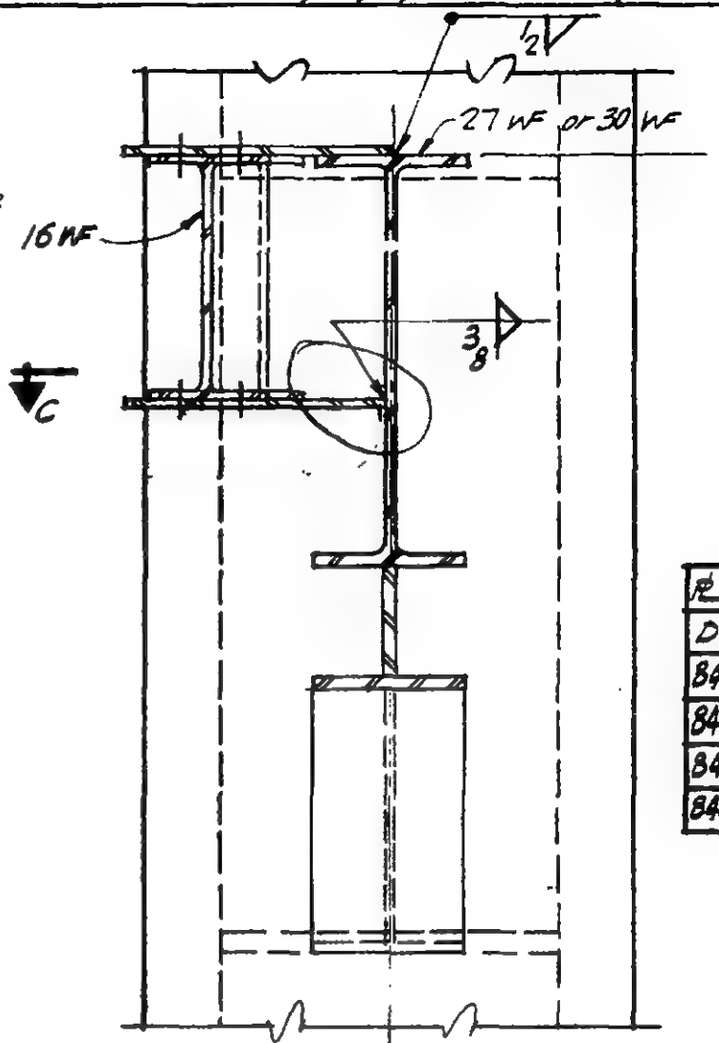

SECTION b-b

PL SCHEDULE	
Det	PL A
840A	10 x 3/4
840B	10 x 7/8
840C	10 1/2 x 7/8
840D	10 1/2 x 7/8

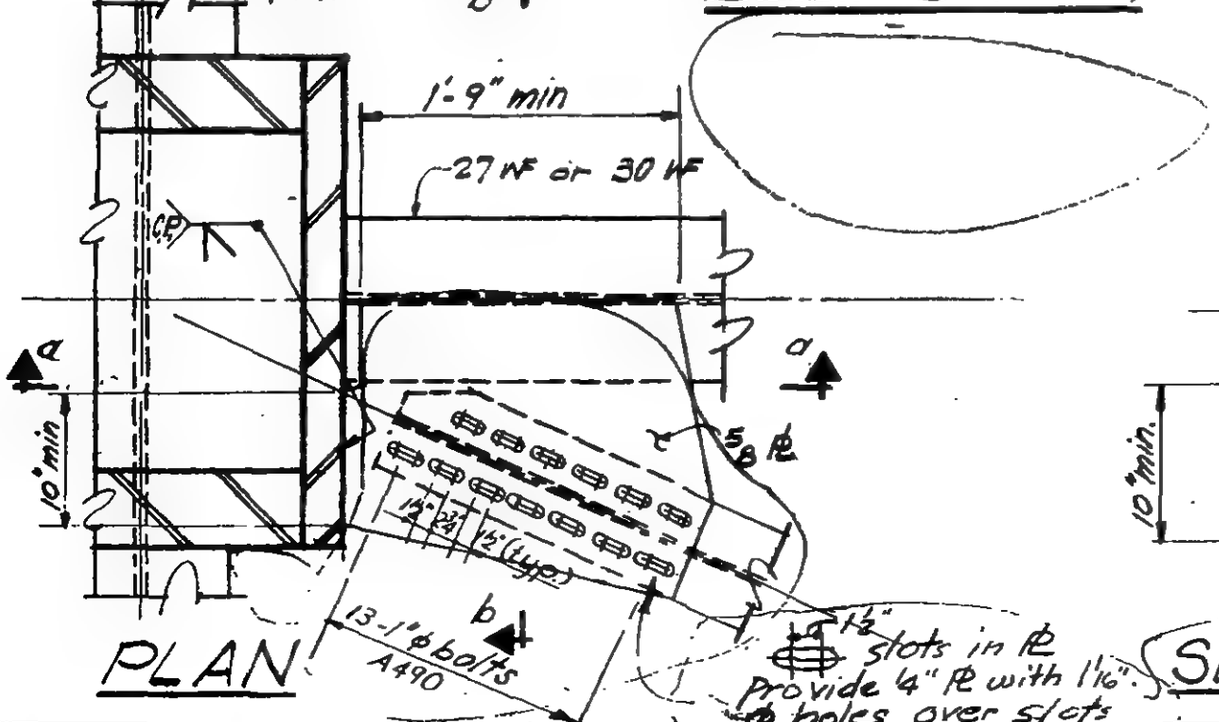

PLAN

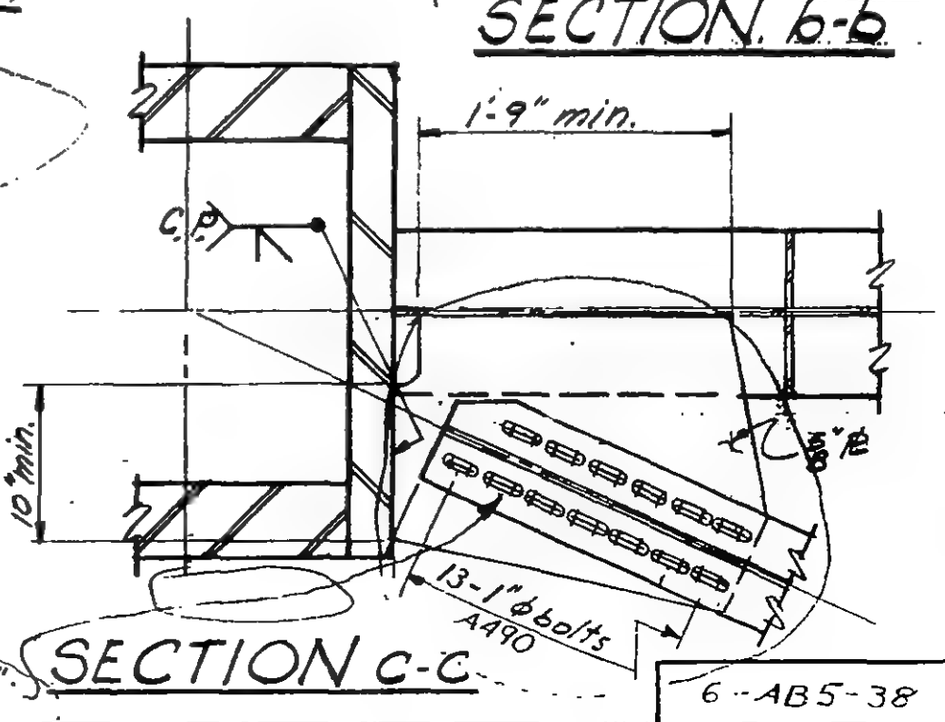

SECTION c-c

6-AB5-38

LICENSED PROFESSIONAL ENGINEER
LESLIE E. ROBERTSON
No. 34360
UNIVERSITY OF THE STATE OF NEW YORK

SKILLING - HELLE - CHRISTIANSEN - ROBERTSON — Structural & Civil Engineers

PROJECT: THE WORLD TRADE CENTER | TITLE: CONNECTION DETAIL 841 A & B | DATE: 9-15-67

REVISIONS
9-29-67
12-14-67

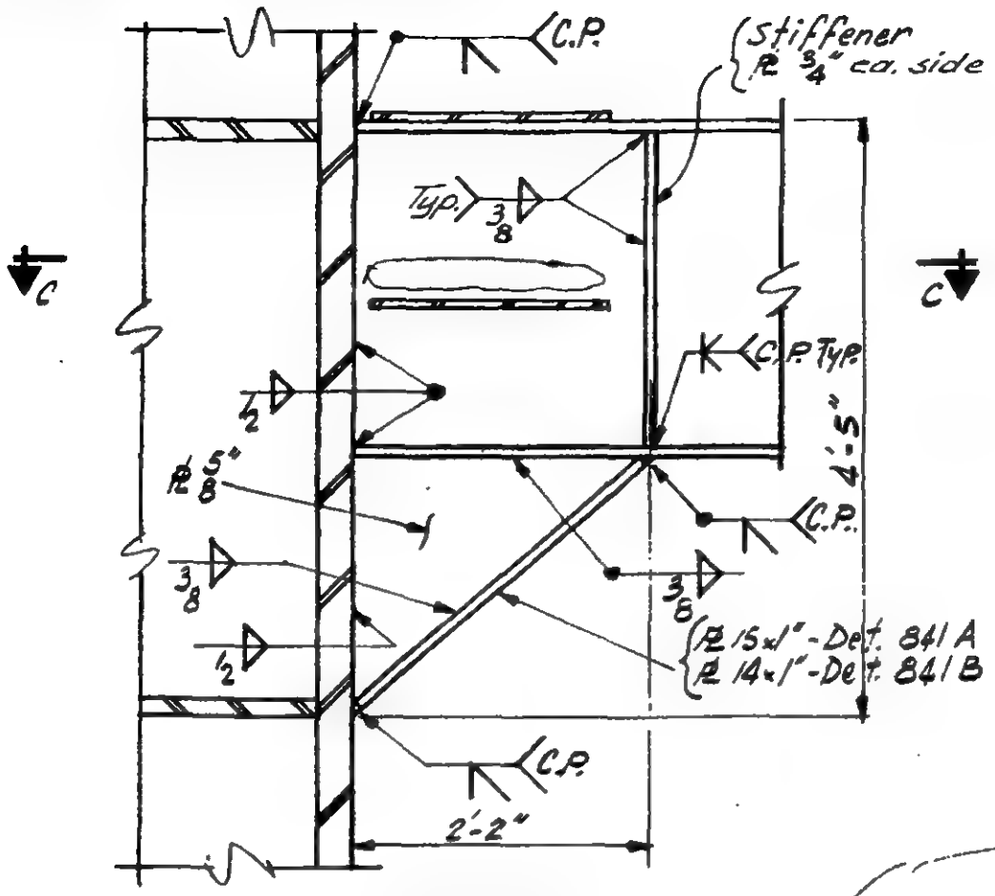

Section a-a

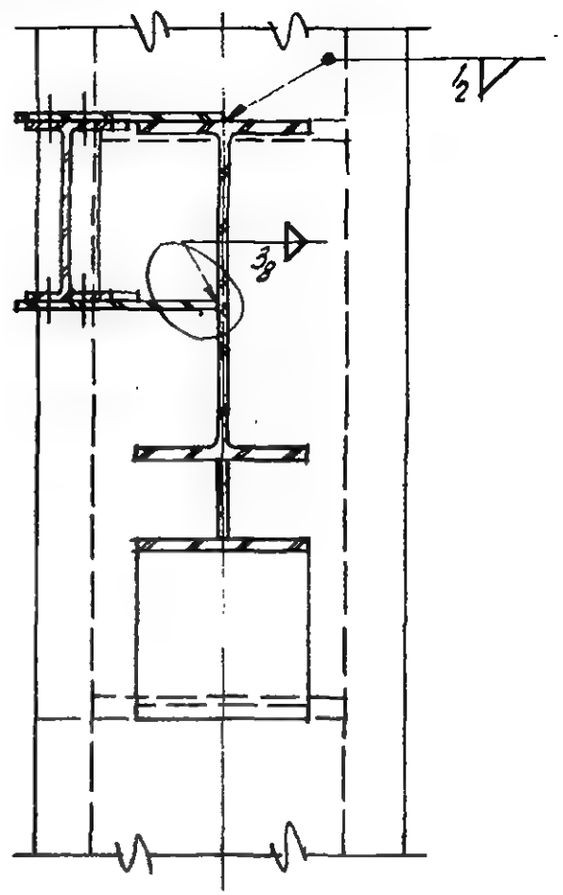

Section b-b

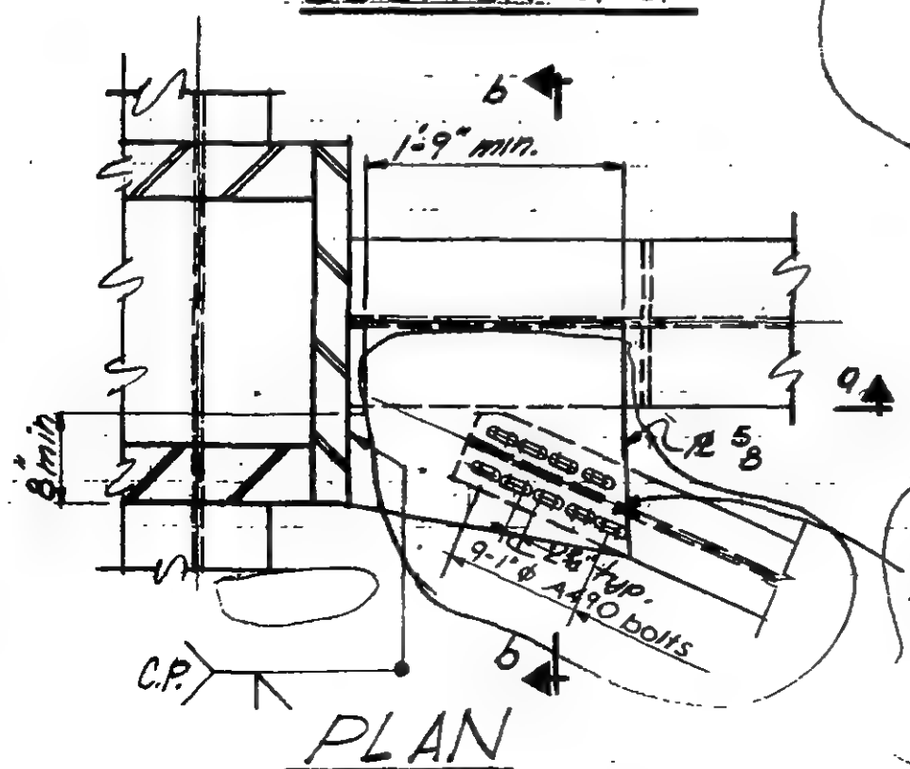

PLAN

1½" slots in PL
Provide ¼" PL with 1 1/16" ϕ holes over slot.

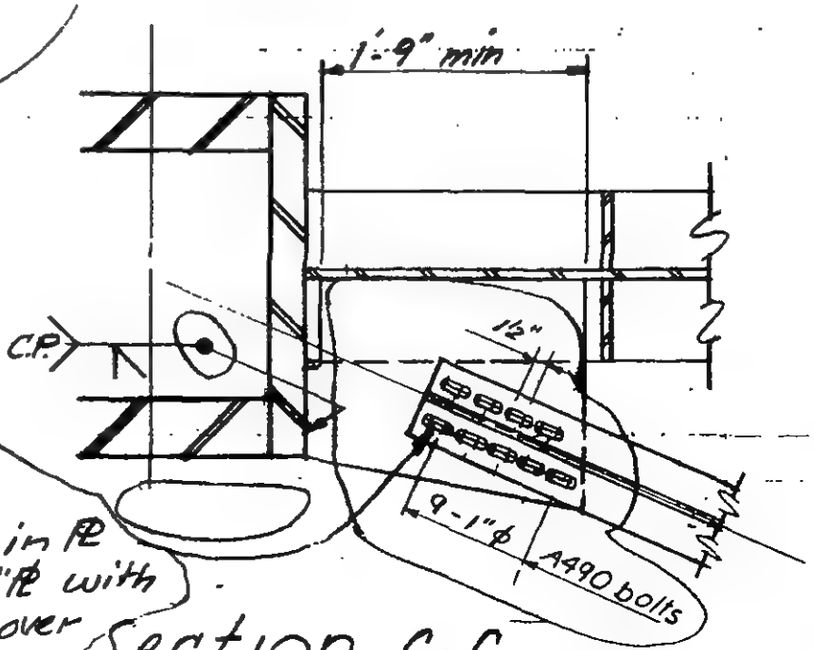

Section C-C

LICENSED PROFESSIONAL ENGINEER — LESLIE E. ROBERTSON — No. 34560 — STATE OF NEW YORK

6-AB5-39

WORTHINGTON, SKILLING, HELLE & JACKSON — Civil & Structural Engineers

PROJECT THE WORLD TRADE CENTER | TITLE CONNECTION DETAIL 842A & B | DATE 7-14-67

REVISIONS
9-15-67
10-31-67
12-14-67

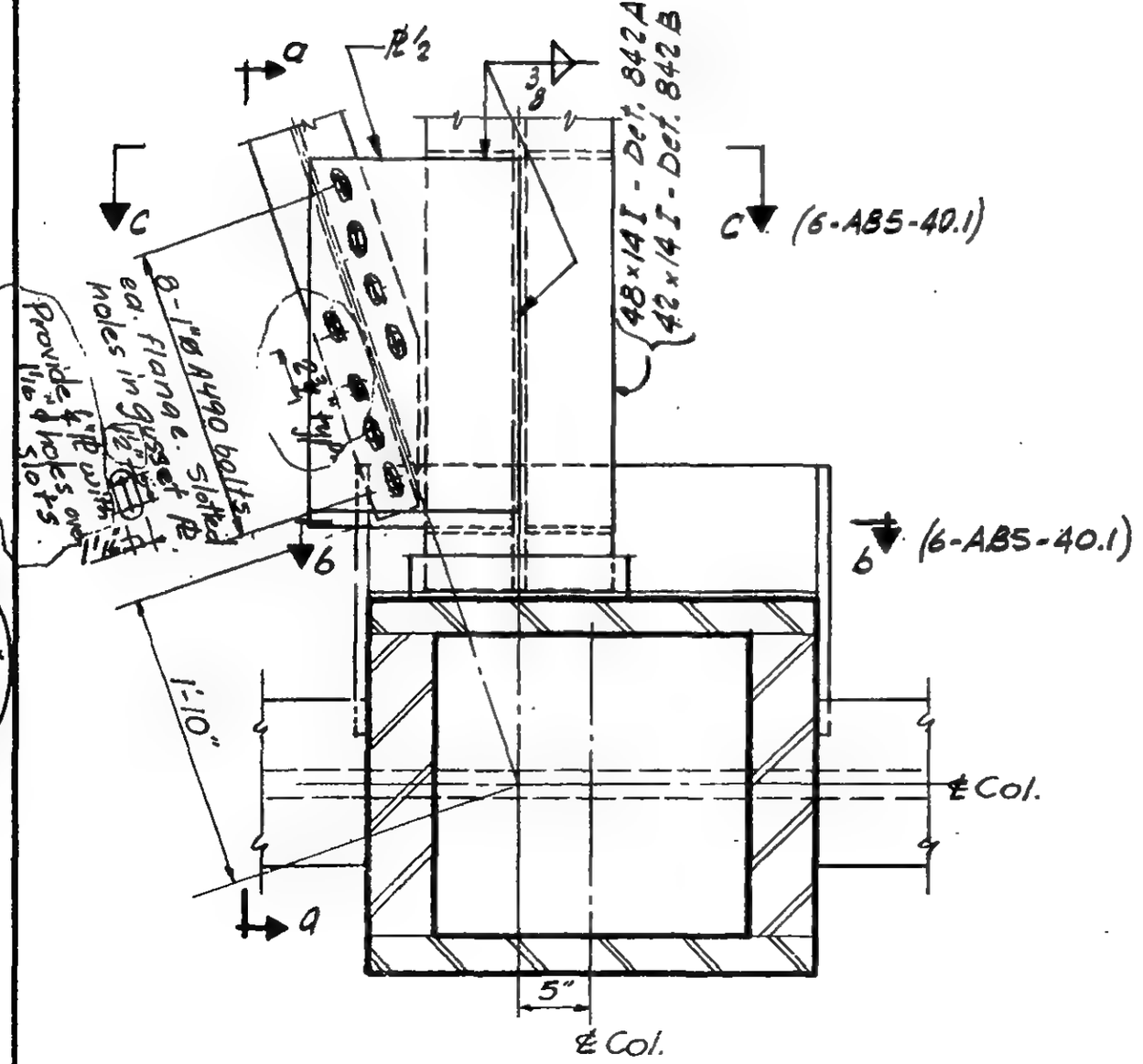

PLAN

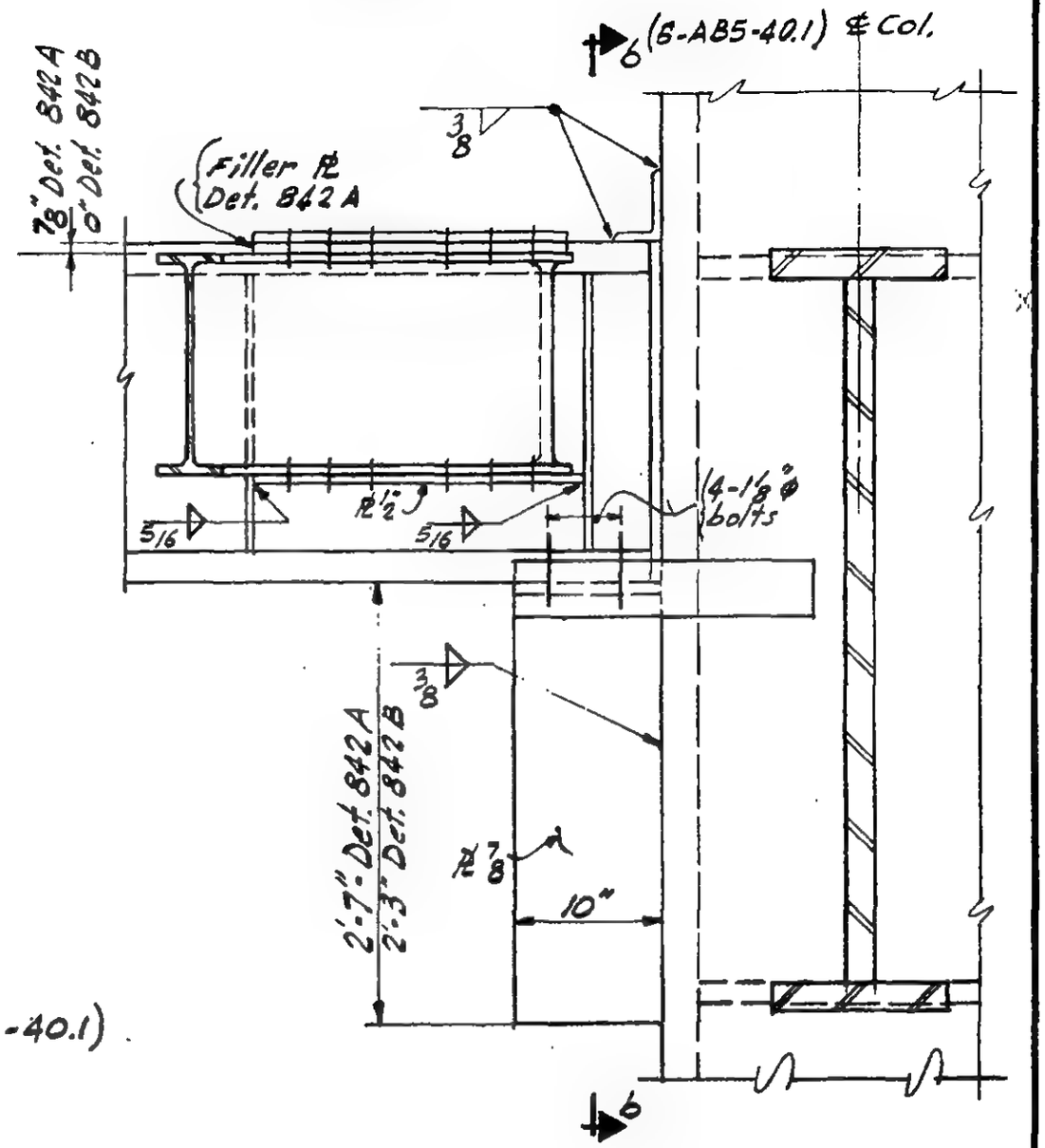

Section a-a

6-AB5-40

LICENSED PROFESSIONAL ENGINEER
LESLIE E. ROBERTSON
No. 34360
UNIVERSITY OF THE STATE OF NEW YORK

SKILLING - HELLE - CHRISTIANSEN - ROBERTSON Structural & Civil Engineers

PROJECT THE WORLD TRADE CENTER | TITLE CONNECTION DETAIL 842 A & B | DATE 9-15-67

REVISIONS

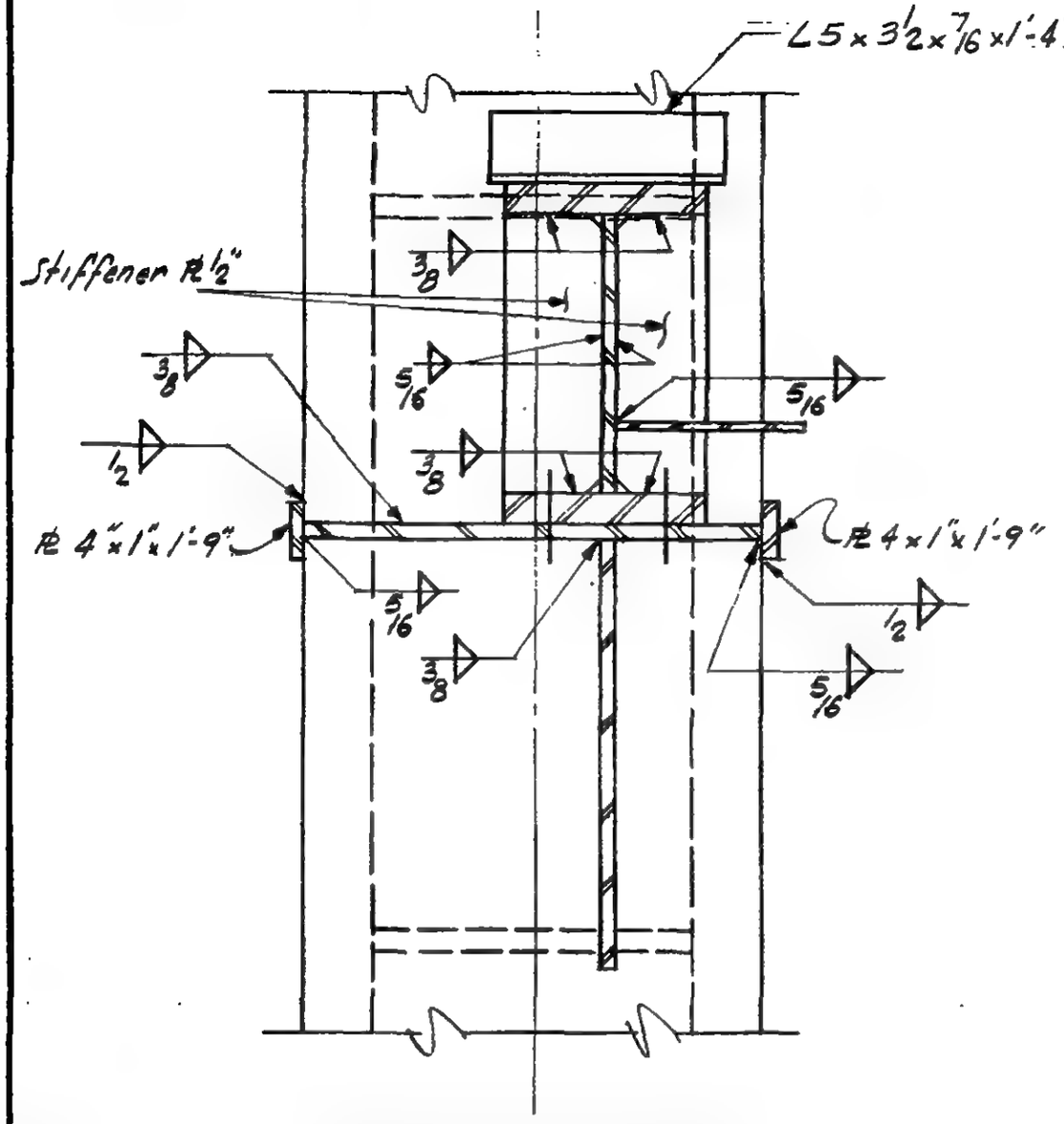

Section b-b

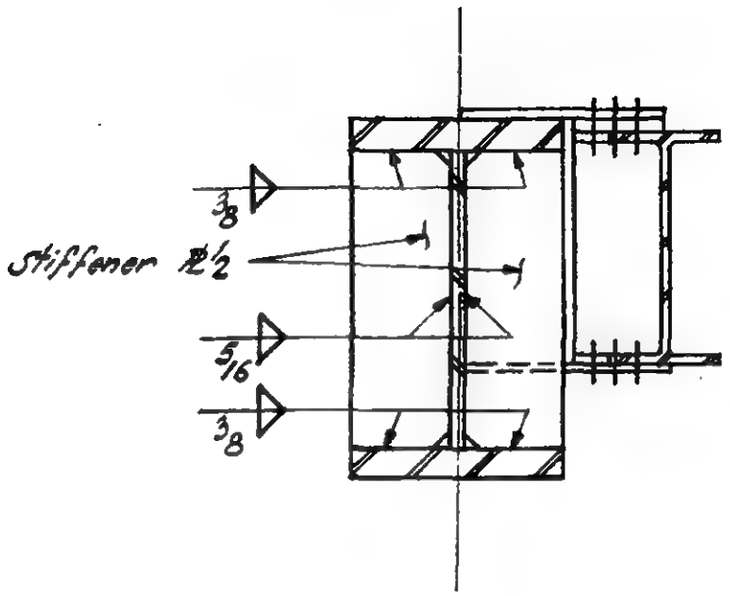

Section c-c

LICENSED PROFESSIONAL ENGINEER
LESLIE E. ROBERTSON
No. 34360
UNIVERSITY OF THE STATE OF NEW YORK

5-AB5-40.1

WORTHINGTON, SKILLING, HELLE & JACKSON — Civil & Structural Engineers

PROJECT THE WORLD TRADE CENTER | TITLE CONNECTION DETAIL 843A | DATE 7-14-67

REVISIONS

9-15-67

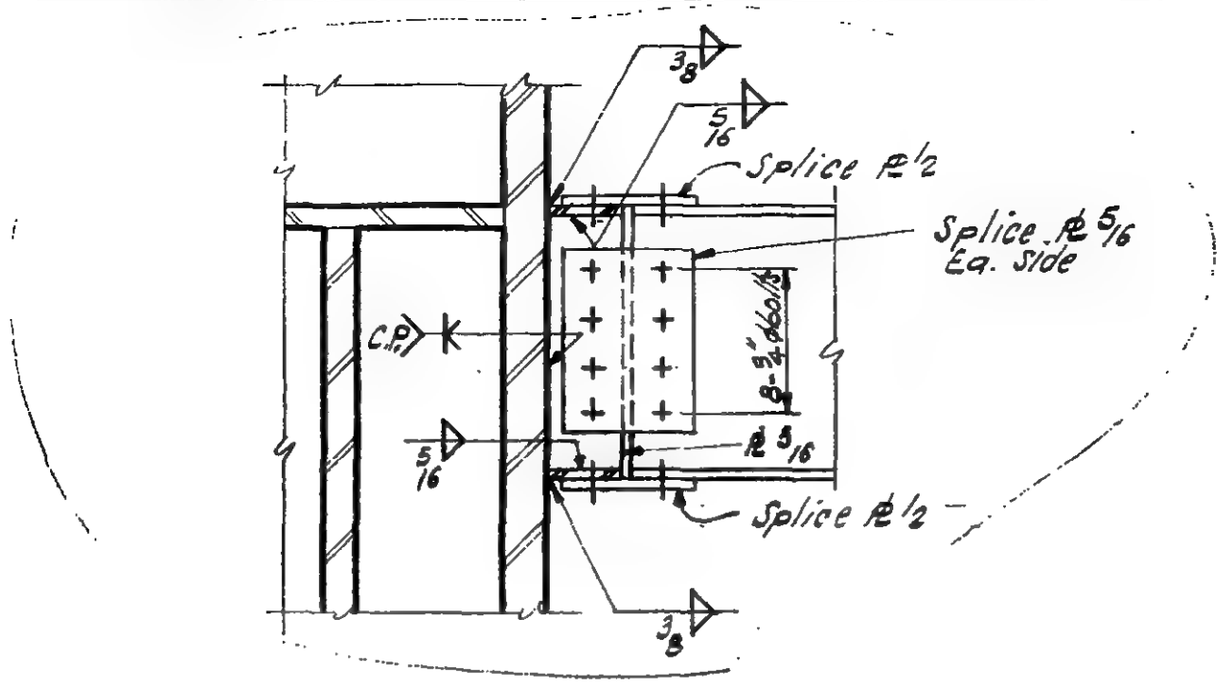

Section a-a
Section b-b similar

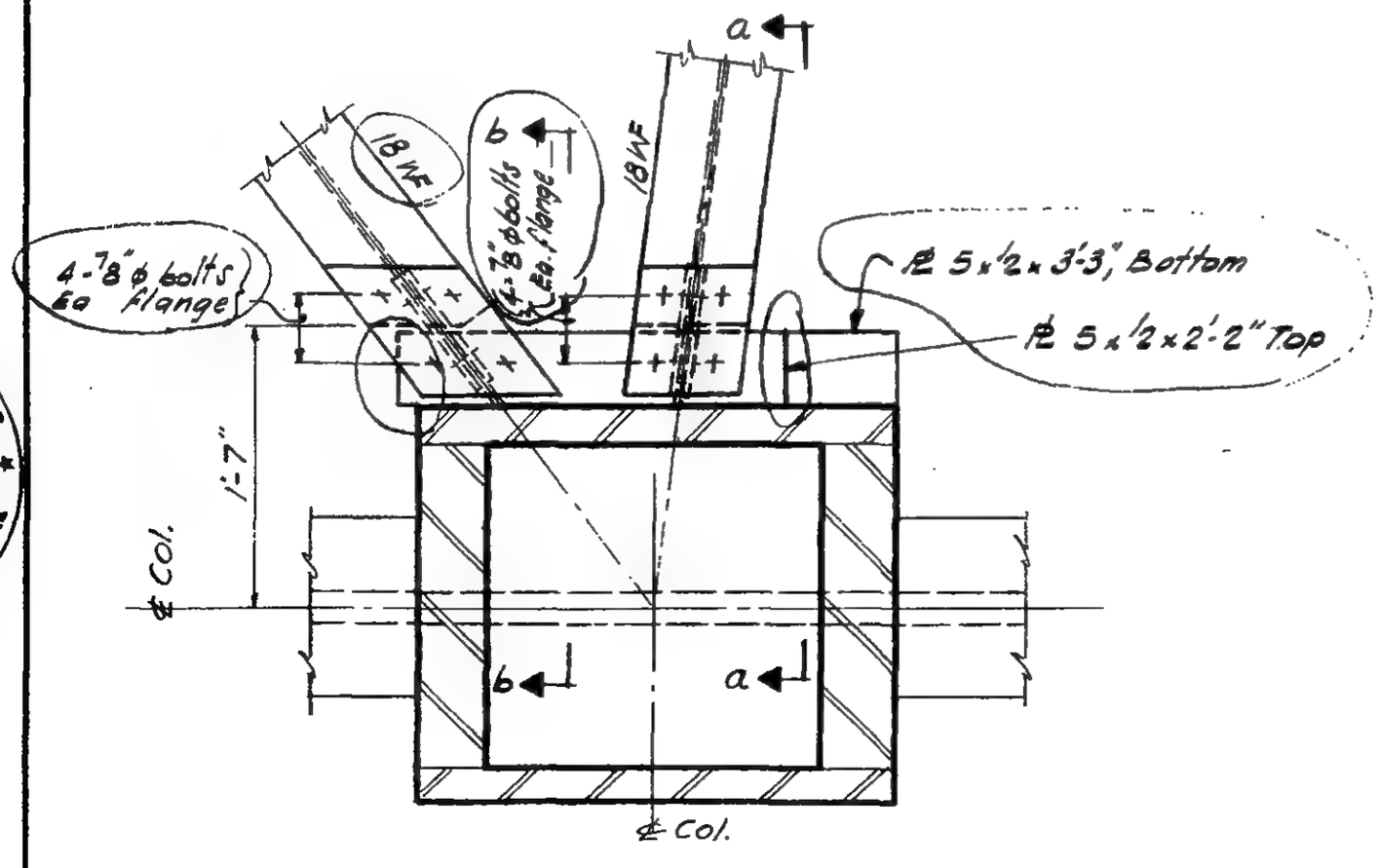

Plan

LICENSED PROFESSIONAL ENGINEER — LESLIE E. ROBERTSON — No. 34360 — UNIVERSITY OF THE STATE OF NEW YORK

6-AB5-41

WORTHINGTON, SKILLING, HELLE & JACKSON — Civil & Structural Engineers

PROJECT THE WORLD TRADE CENTER | TITLE CONNECTION DETAIL 844(A) | DATE 7-14-67

EVISIONS
9-15-67

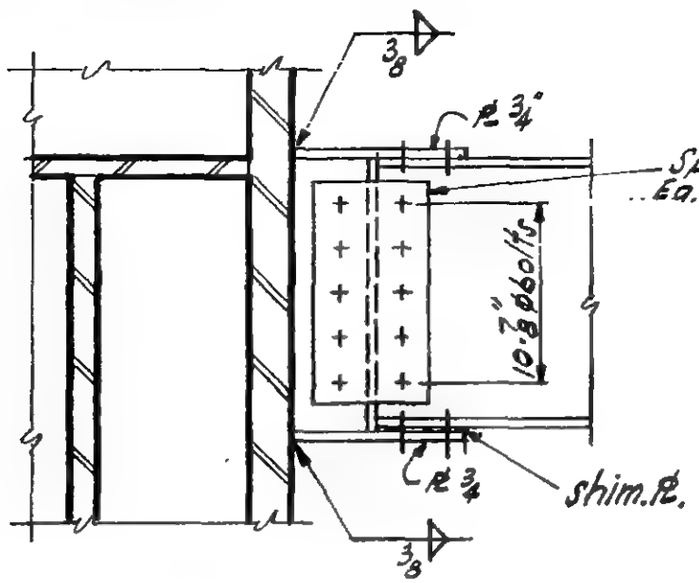

Section a-a
Section b-b Opp. hand

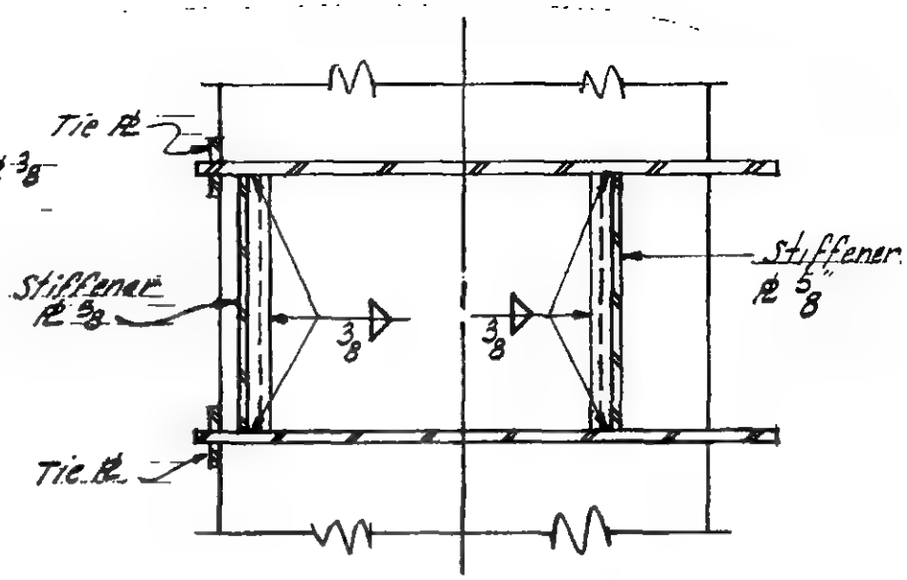

Section c-c

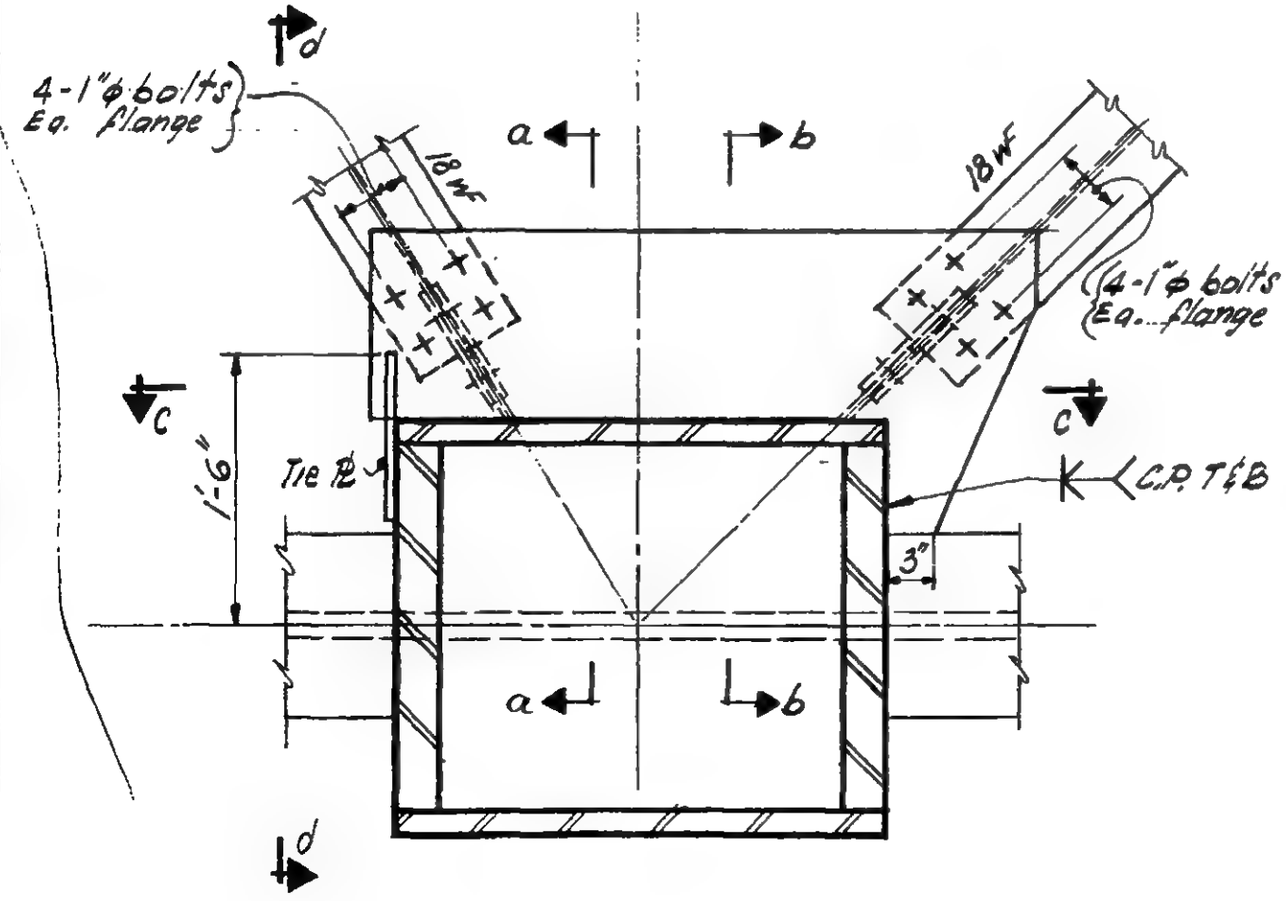

Plan

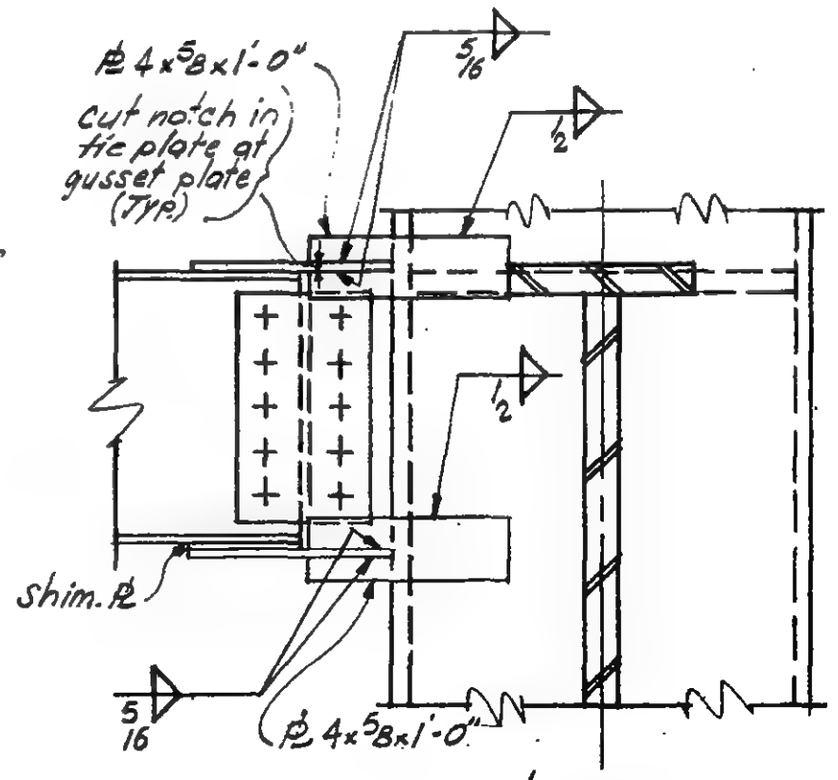

Section d-d

LICENSED PROFESSIONAL ENGINEER
LESLIE E. ROBERTSON
No. 34360
STATE OF THE STATE OF NEW YORK

6-AB5-42

SKILLING - HELLE - CHRISTIANSEN - ROBERTSON Structural & Civil Engineers

PROJECT THE WORLD TRADE CENTER | TITLE CONNECTION DETAIL 845A | DATE 9-29-67

REVISIONS

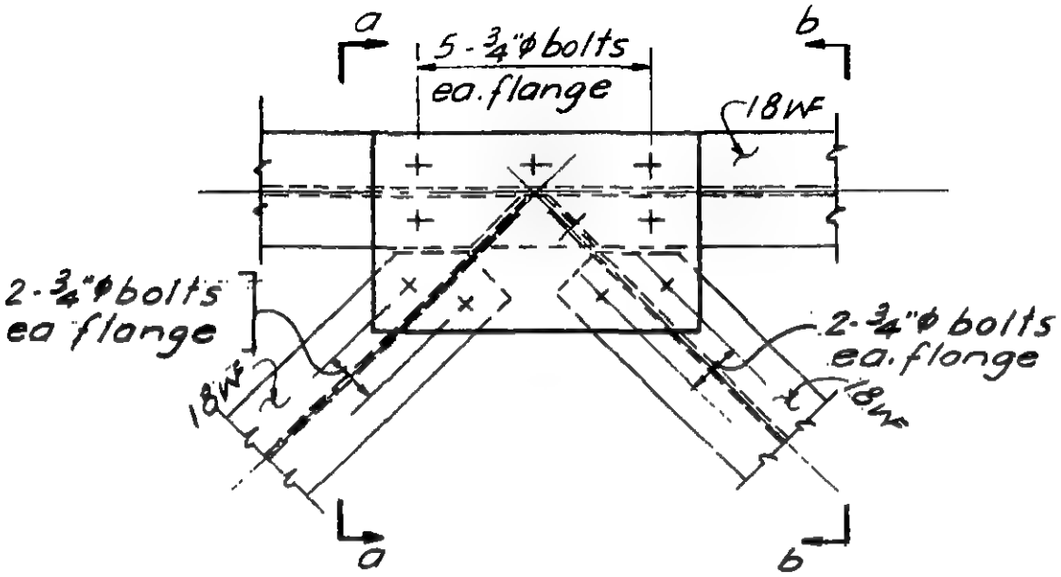

Plan

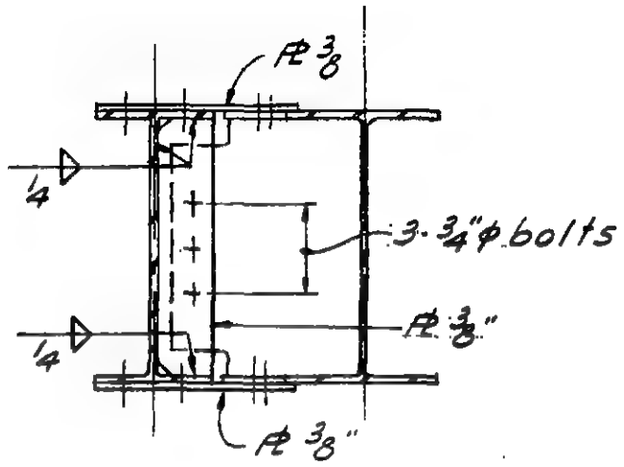

Section a-a

Section b-b, Opp. hand

LICENSED PROFESSIONAL ENGINEER
LESLIE E. ROBERTSON
No. 34360
UNIVERSITY OF THE STATE OF NEW YORK

6-AB5-43

SKILLING - HELLE - CHRISTIANSEN - ROBERTSON Structural & Civil Engineers

PROJECT THE WORLD TRADE CENTER | TITLE CONNECTION DETAIL 846A, B | DATE 9-29-67

REVISIONS
10-31-67

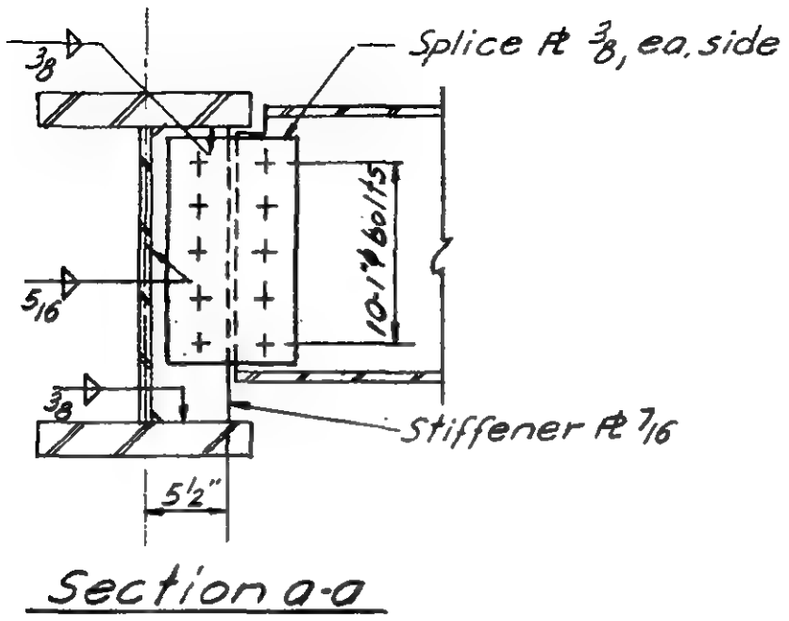

Section a-a

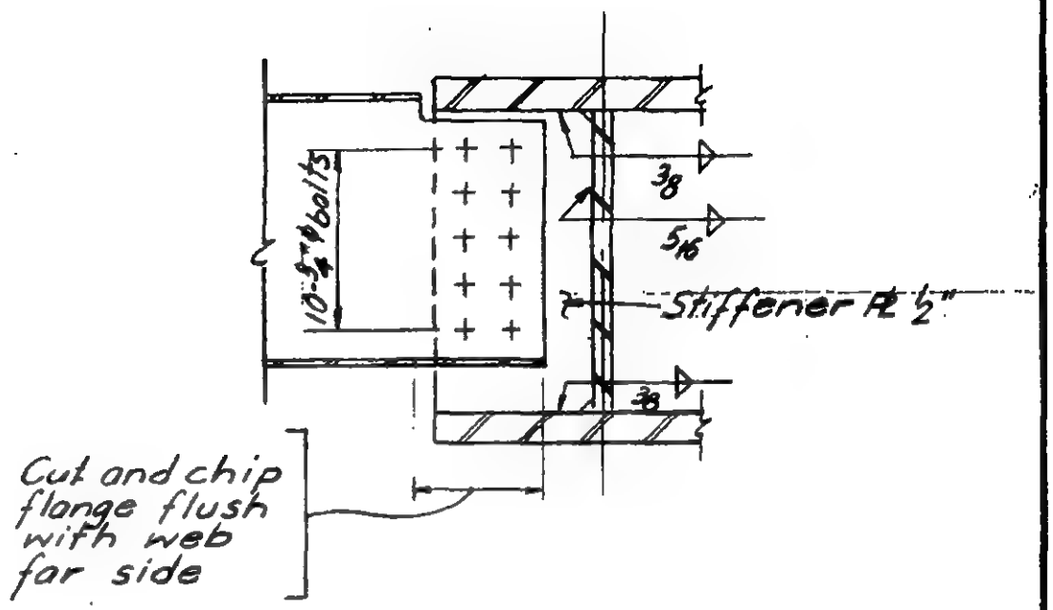

Section b-b

Section c-c, opp. hand.

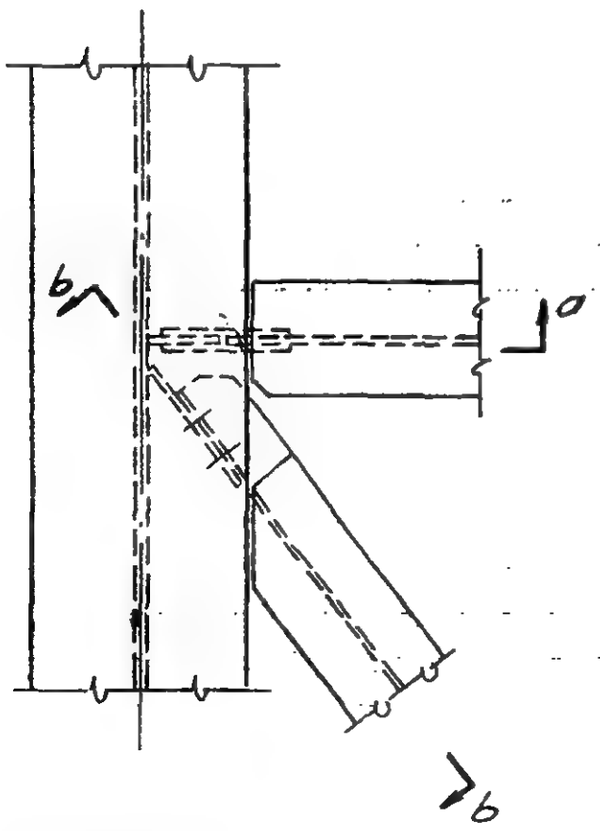

Plan
Det. 846 A

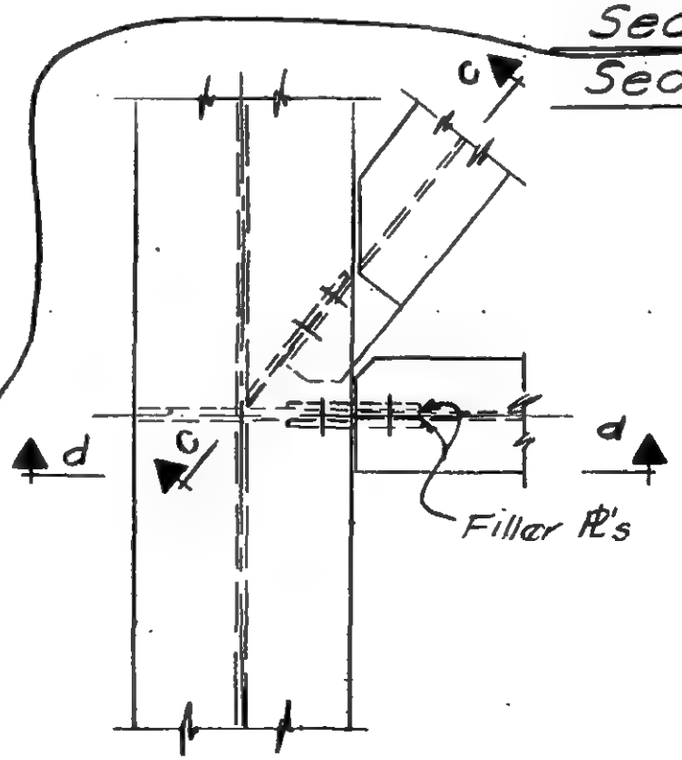

Plan.
Det. 846 B

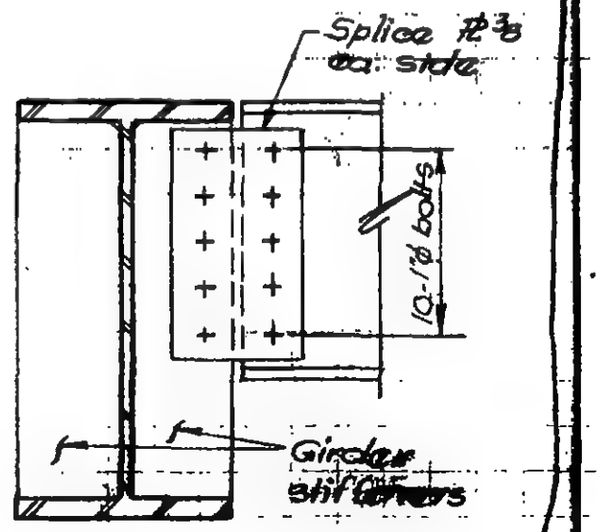

Section d-d

LICENSED PROFESSIONAL ENGINEER
LESLIE E. ROBERTS
No. 34360
UNIVERSITY OF THE STATE OF NEW YORK

6-AB5-44

WORTHINGTON, SKILLING, HELLE & JACKSON — Civil & Structural Engineers

PROJECT THE WORLD TRADE CENTER | TITLE CONNECTION DETAIL 847A | DATE 7-14-67

REVISIONS

9-29-67

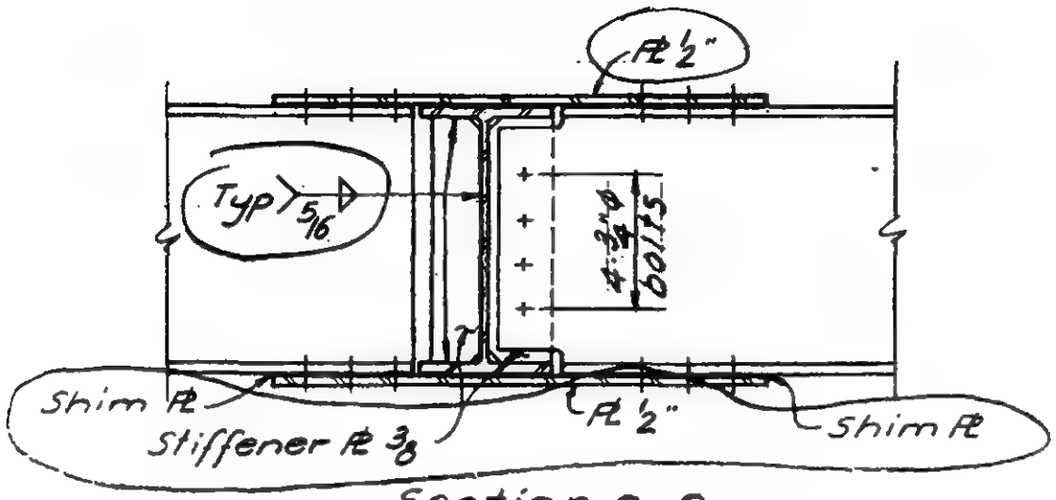

Section a-a

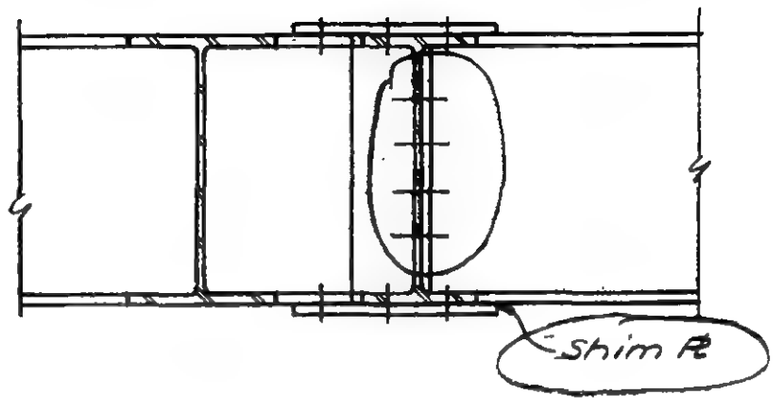

Section b-b

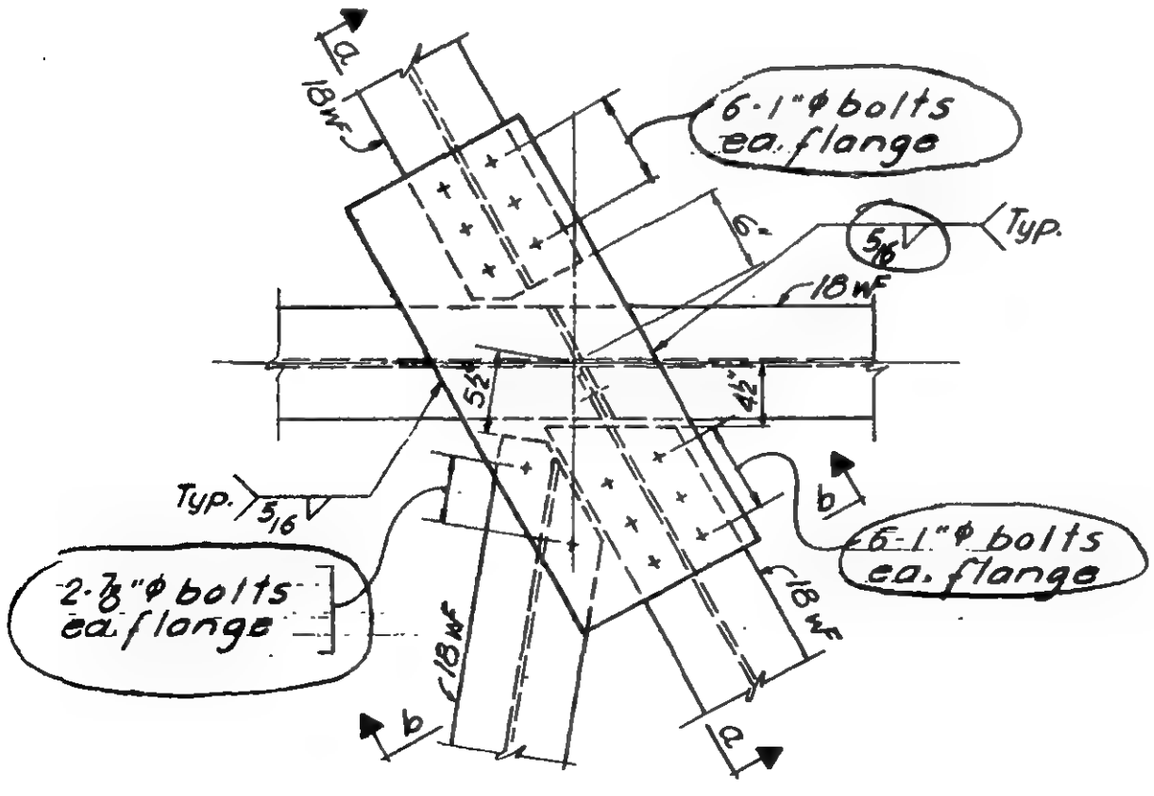

Plan

LICENSED PROFESSIONAL ENGINEER — LESLIE E. ROBERTSON — No. 34360 — UNIVERSITY OF THE STATE OF NEW YORK

6-AB5-45

WORTHINGTON, SKILLING, HELLE & JACKSON — Civil & Structural Engineers

PROJECT THE WORLD TRADE CENTER | TITLE CONNECTION DETAIL 848(A) | DATE 7-14-67

REVISIONS

9-15-67

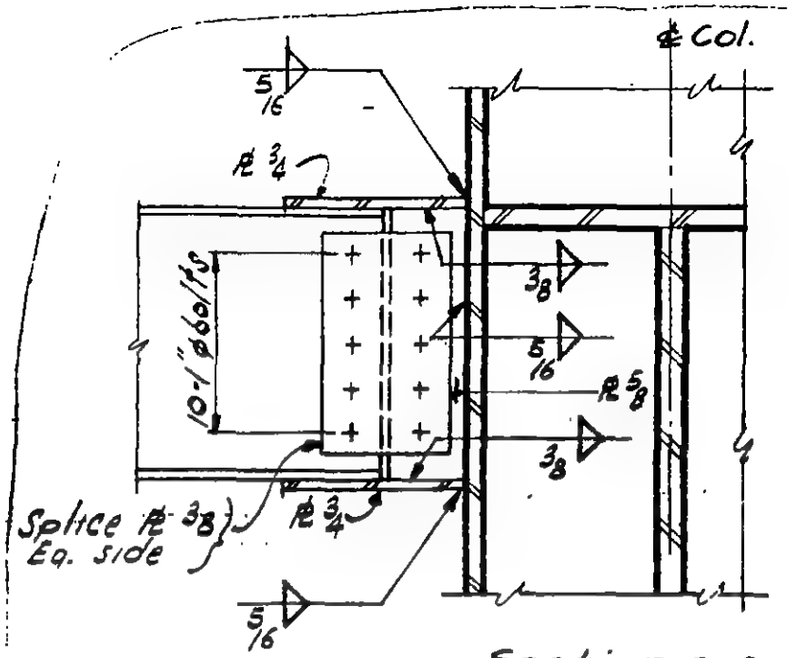

Section a-a

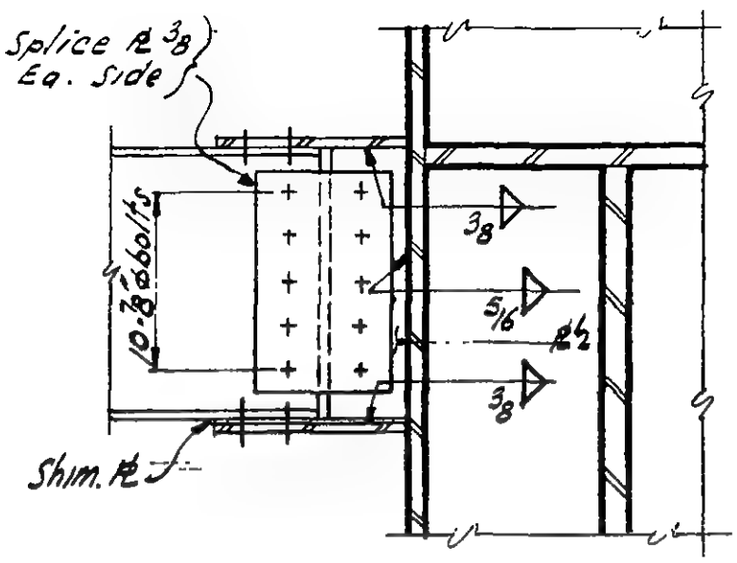

Section b-b

Section c-c, Opp hand

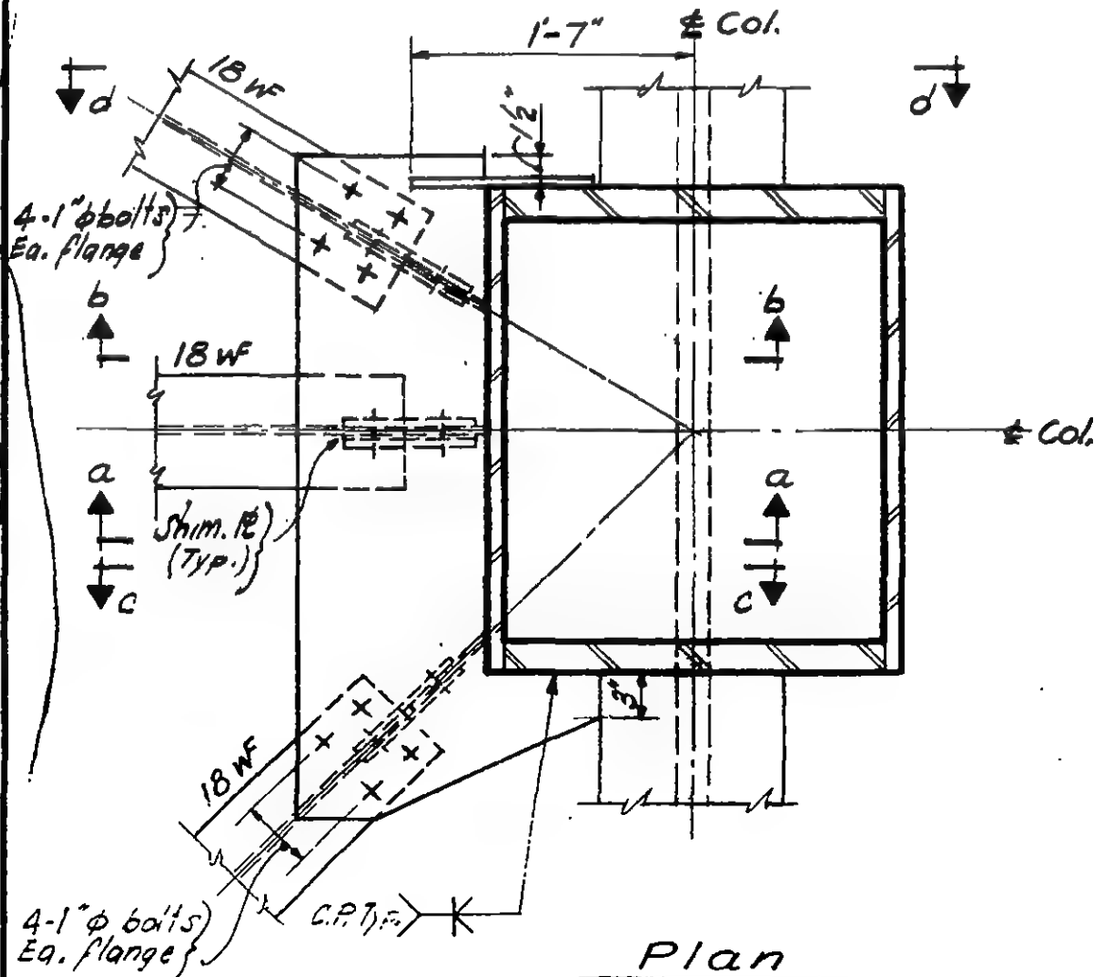

Plan

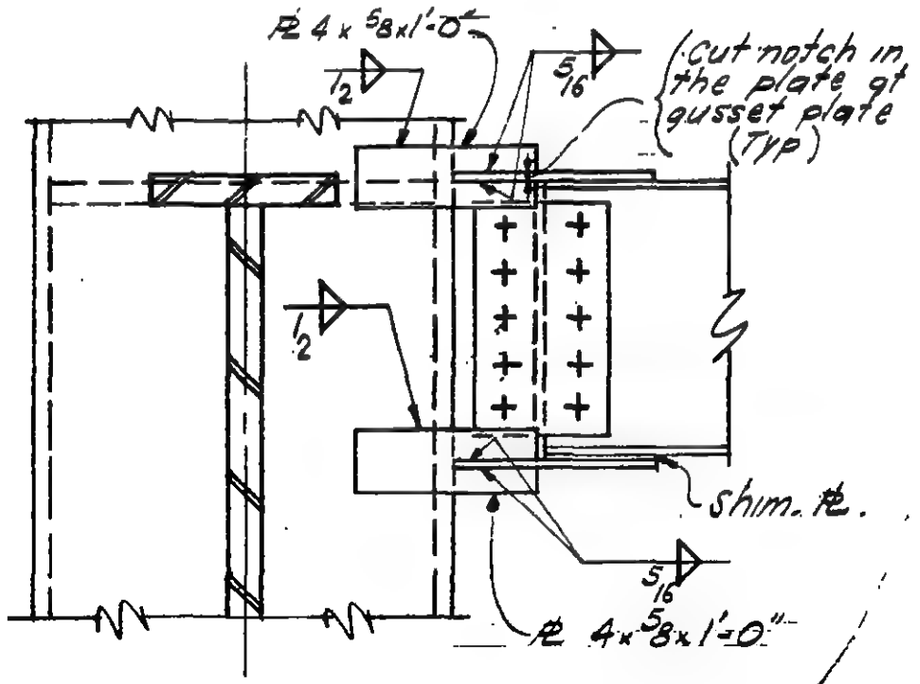

Section d-d

6-AB5-46

LICENSED PROFESSIONAL ENGINEER LESLIE E. ROBERTSON No. 34360 OF THE STATE OF NEW YORK

WORTHINGTON, SKILLING, HELLE & JACKSON — Civil & Structural Engineers

PROJECT THE WORLD TRADE CENTER | TITLE CONNECTION DETAIL 849 A | DATE 7-14-67

REVISIONS

9-29-67

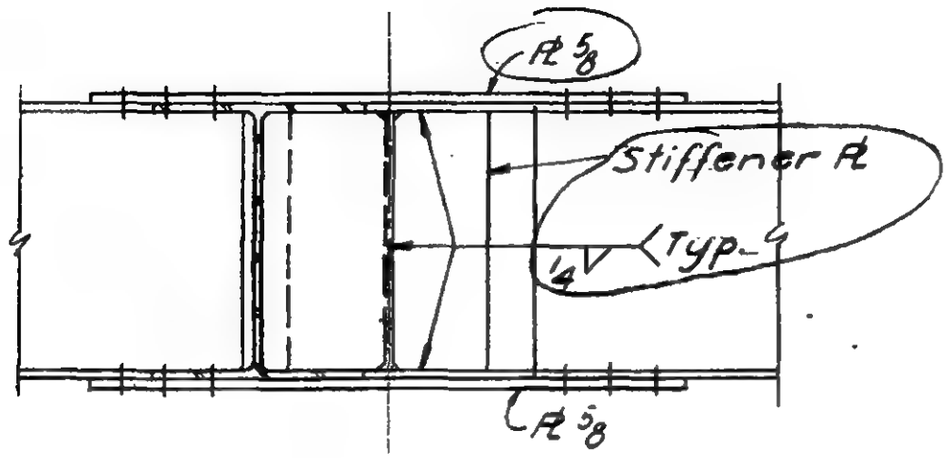

Section a-a

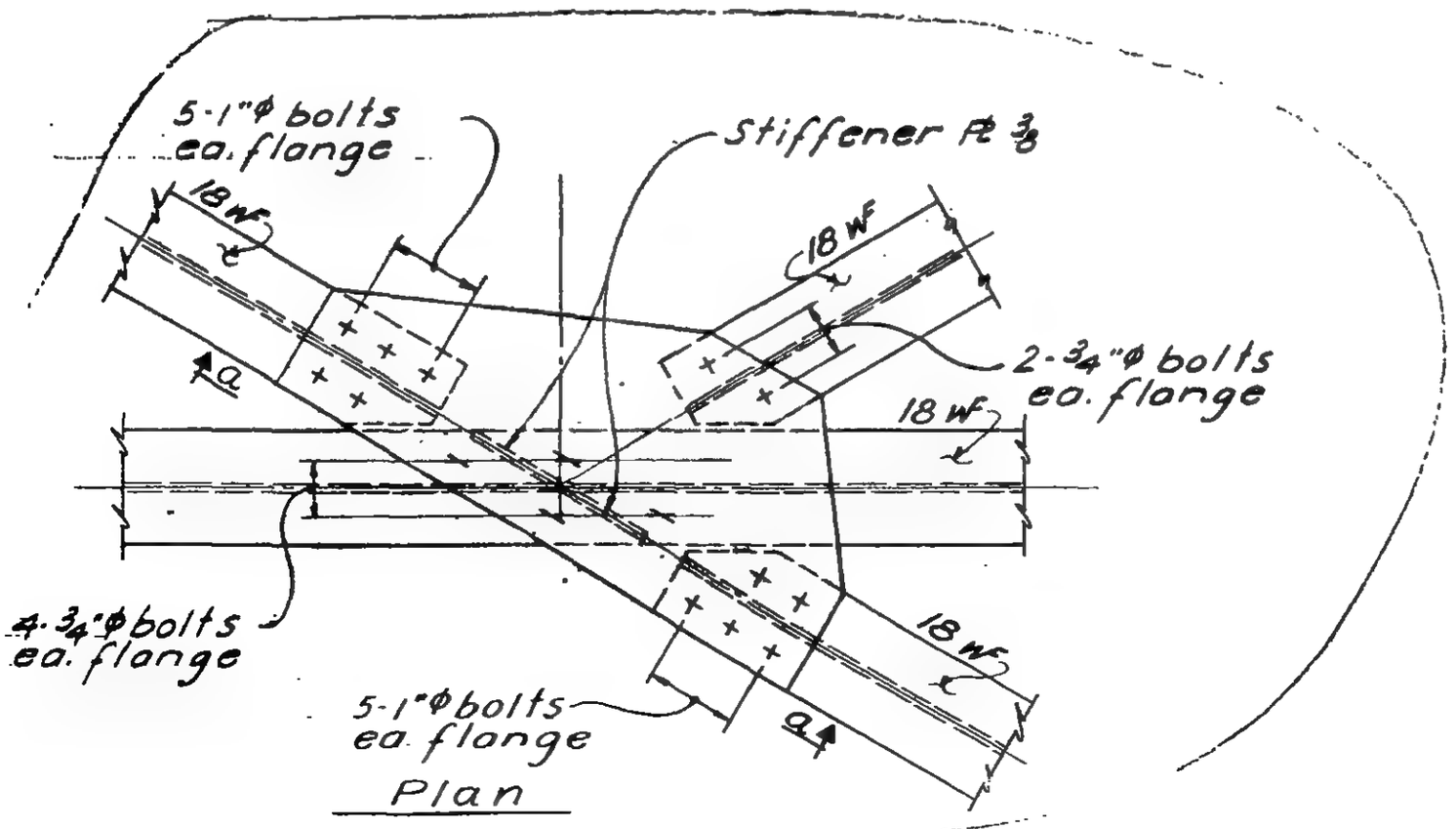

Plan

LICENSED PROFESSIONAL ENGINEER
LESLIE E. ROBERTSON
No. 34360
UNIVERSITY OF THE STATE OF NEW YORK

6-AB5-47

SKILLING - HELLE - CHRISTIANSEN - ROBERTSON Structural & Civil Engineers

PROJECT THE WORLD TRADE CENTER | TITLE CONNECTION DETAIL 850 A | DATE 9-15-67

REVISIONS

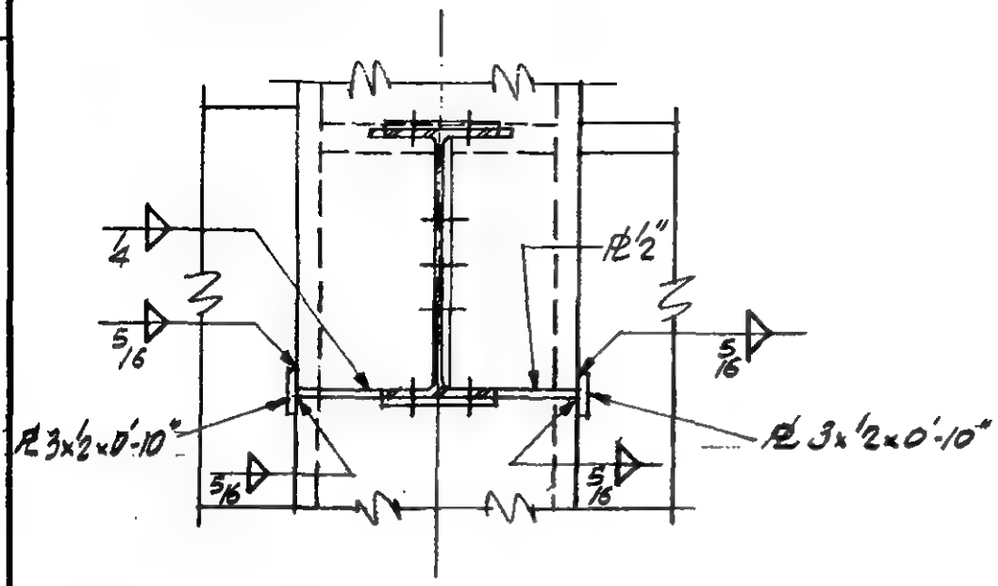

Section b-b

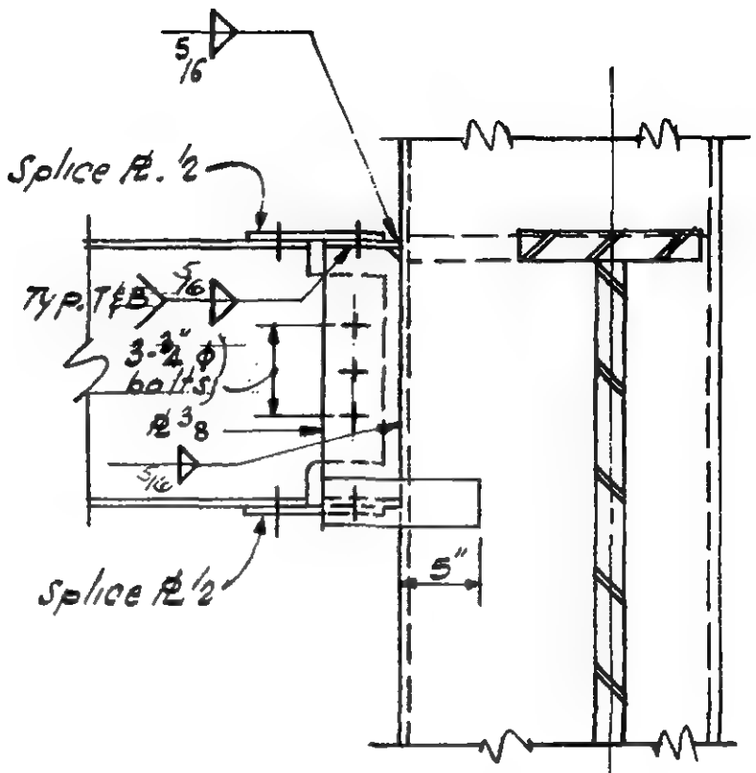

Section a-a

a

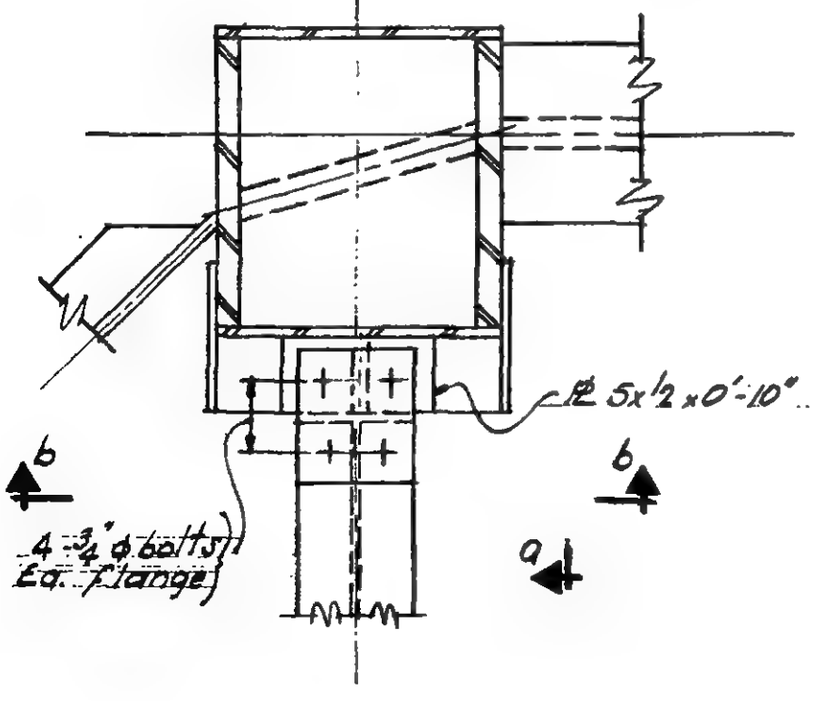

PLAN

LICENSED PROFESSIONAL ENGINEER
LESLIE E. ROBERTSON
No. 34360
OF THE STATE OF NEW YORK

6-AB5-48

WORTHINGTON, SKILLING, HELLE & JACKSON — Civil & Structural Engineers

PROJECT THE WORLD TRADE CENTER | TITLE CONNECTION DETAIL 851 (A, B, C, D, E & F) | DATE 7-14-67

REVISIONS

9-15-67

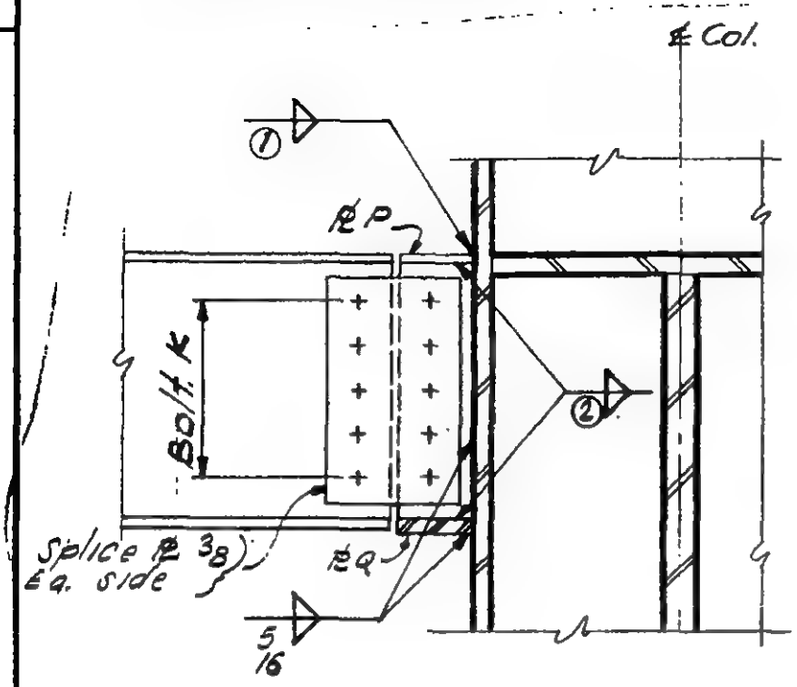

Section a-a

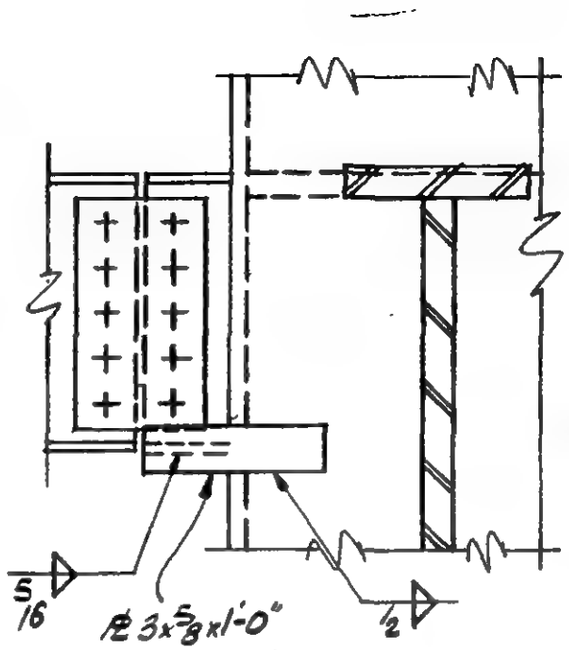

Section b-b

Section c-c, Opp. hand

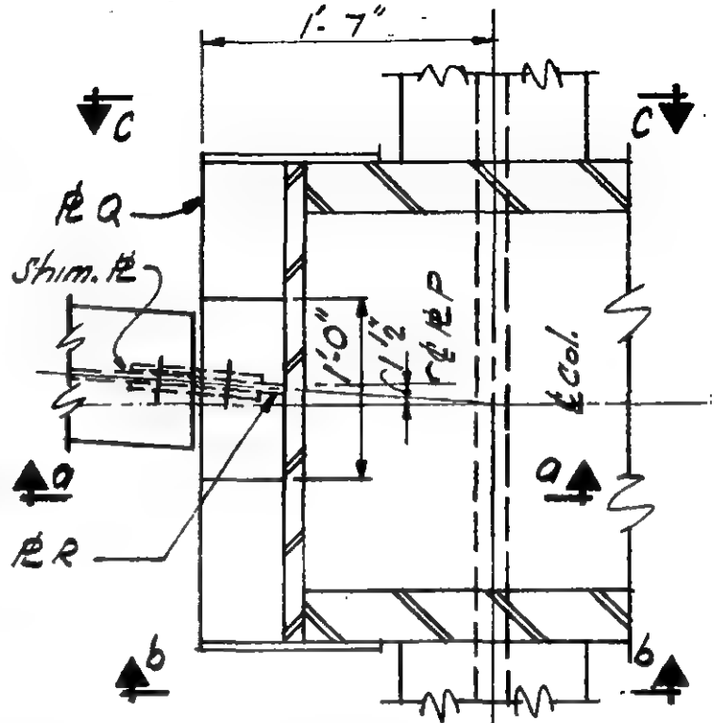

PLAN

Det. 851 D - As shown
Det. 851 C - Opp. hand

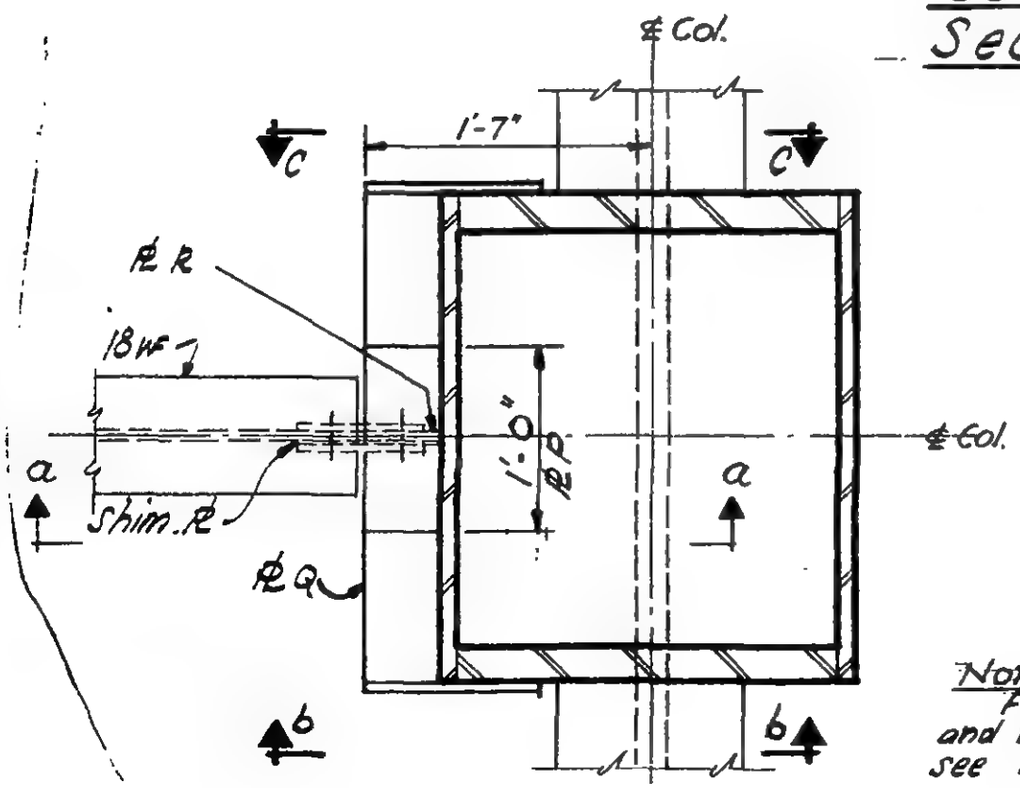

Plan

Def. 851 A, B, & E

Note:
For bolts, plates and welds not given see Sch. 6-AB5-49.1

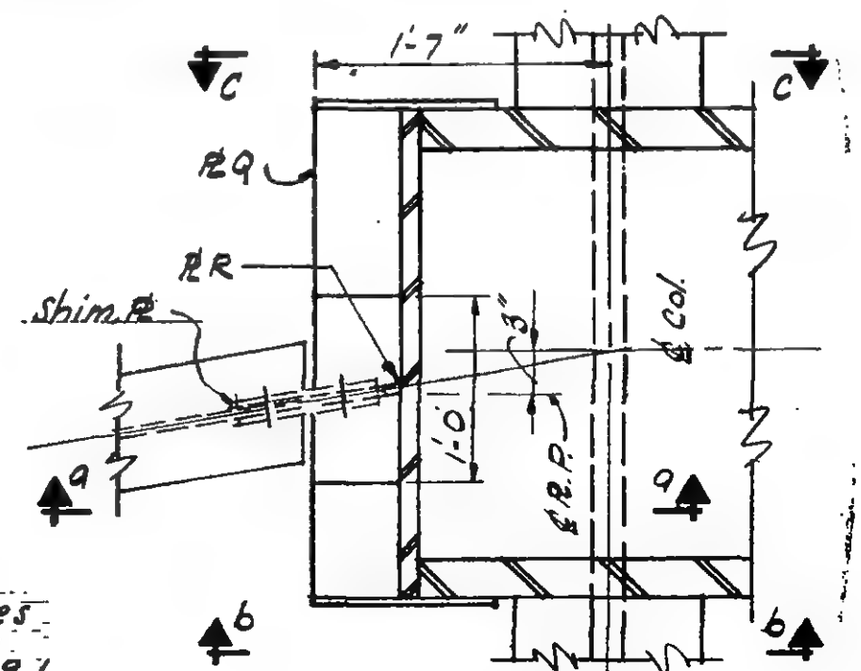

PLAN

Det. 851 E

LICENSED PROFESSIONAL ENGINEER
LESLIE E. ROBERTSON
No. 34360
UNIVERSITY OF THE STATE OF NEW YORK

6-AB5-49

SKILLING - HELLE - CHRISTIANSEN - ROBERTSON Structural & Civil Engineers

PROJECT THE WORLD TRADE CENTER | TITLE SCHEDULE FOR DETAIL 851 A,B,C,D,E & F | DATE 9-15-67

REVISIONS

	851 A	851 B	851 C	851 D	851 E	851 F
PLATES						
P	5/8"	5/8"	5/8"	5/8"	1/2"	1/2"
Q	1"	1"	1"	1"	3/4"	3/4
R	5/8"	5/8"	5/8"	5/8"	1/2"	1/2"
BOLTS						
K	10-1"ϕ	10-7/8"ϕ	10-1"ϕ	10-1"ϕ	10-7/8"ϕ	10-7/8"ϕ
WELDS						
①	5/16	5/16	5/16	5/16	5/16	5/16
②	3/8	3/8	3/8	3/8	5/16	5/16

LICENSED PROFESSIONAL ENGINEER LESLIE E. ROBERTSON No. 34360 UNIVERSITY OF THE STATE OF NEW YORK

6-185-49.1

SKILLING - HELLE - CHRISTIANSEN - ROBERTSON Structural & Civil Engineers

PROJECT THE WORLD TRADE CENTER | TITLE CONNECTION DETAIL 852 A | DATE 9-15-67

REVISIONS

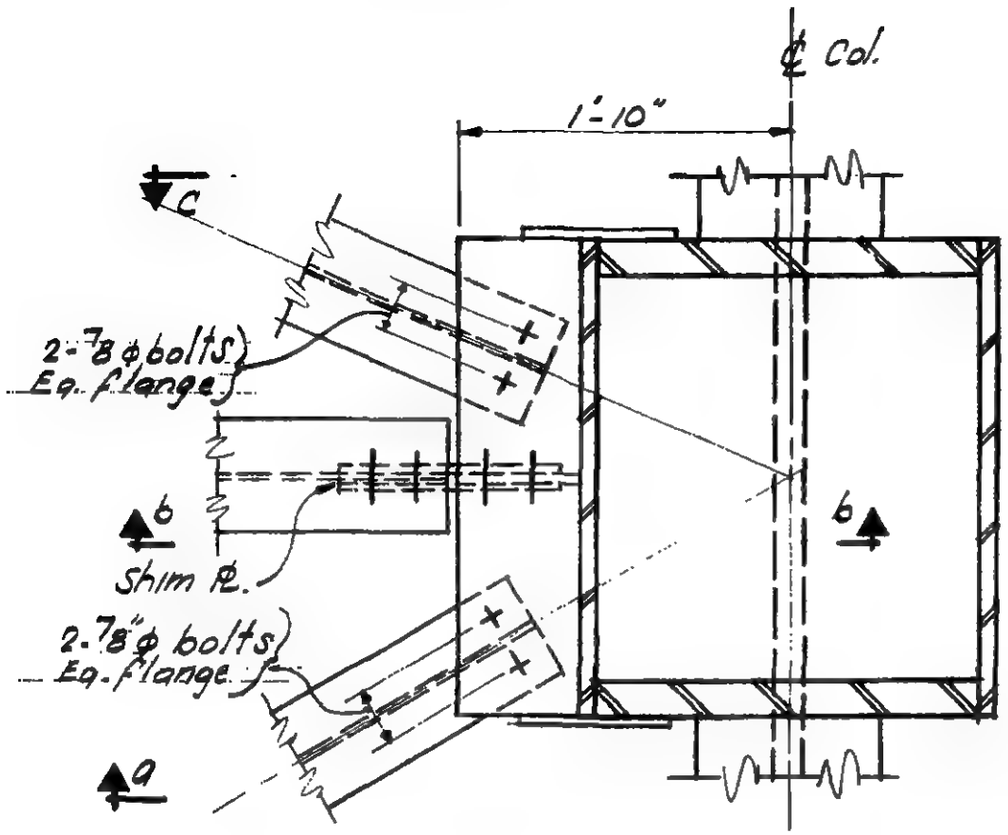

PLAN

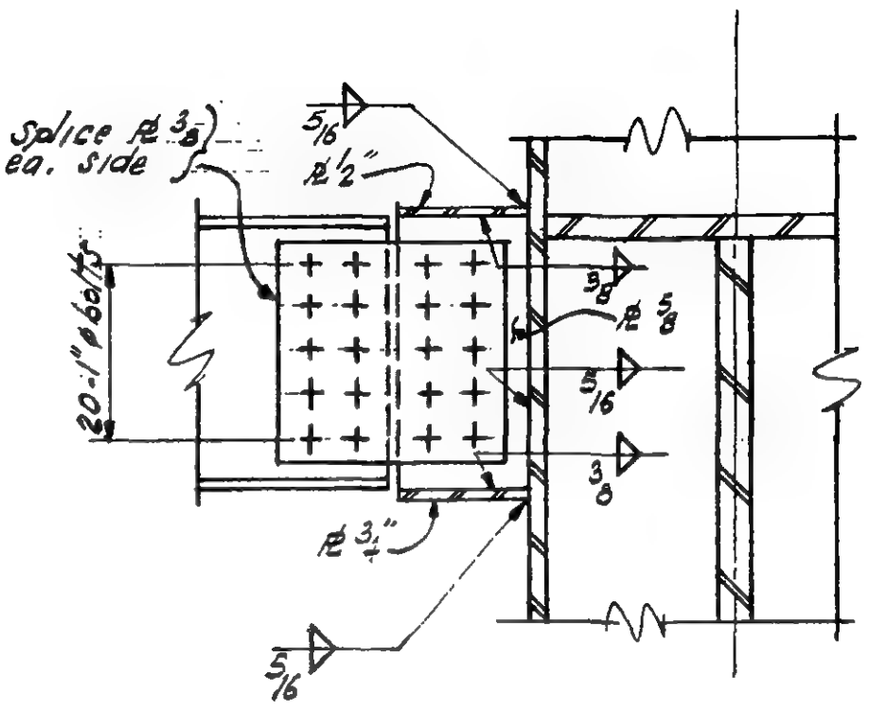

Section b-b

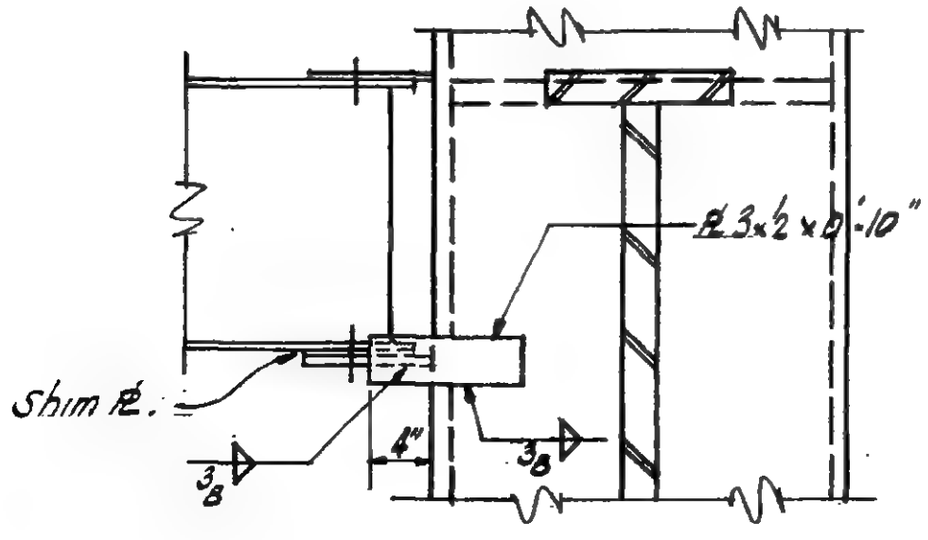

Section a-a

Section c-c, Opp. hand

LICENSED PROFESSIONAL ENGINEER LESLIE E. ROBERTSON No. 34360 UNIVERSITY OF THE STATE OF NEW YORK

6-AB5-50

SKILLING - HELLE - CHRISTIANSEN - ROBERTSON Structural & Civil Engineers

PROJECT THE WORLD TRADE CENTER | TITLE CONNECTION DETAIL 852 B | DATE 9-15-67

REVISIONS

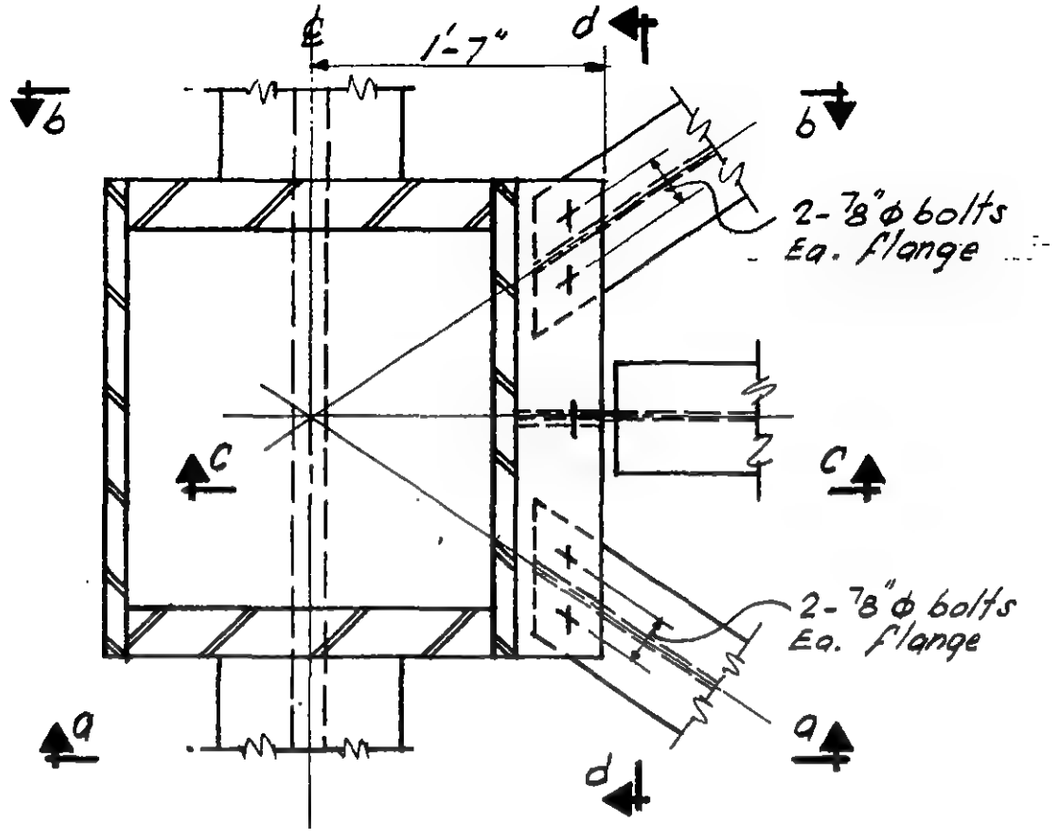

PLAN

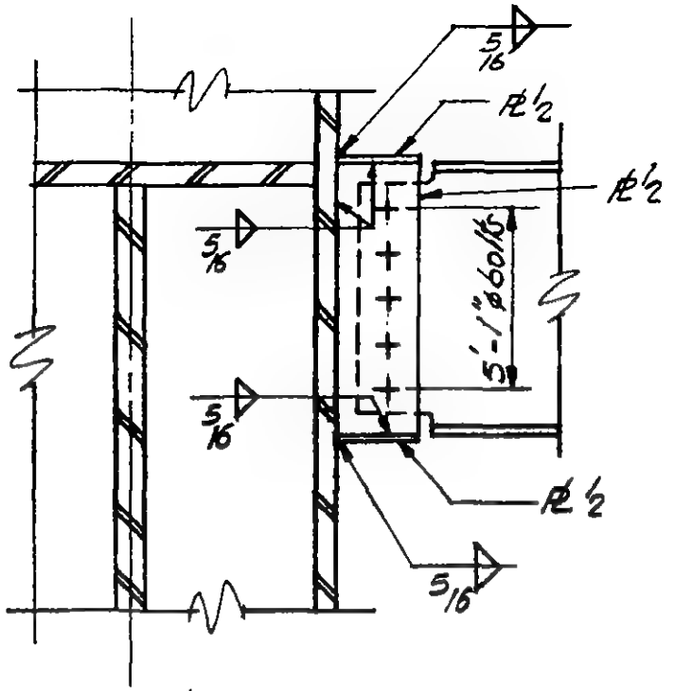

Section c-c

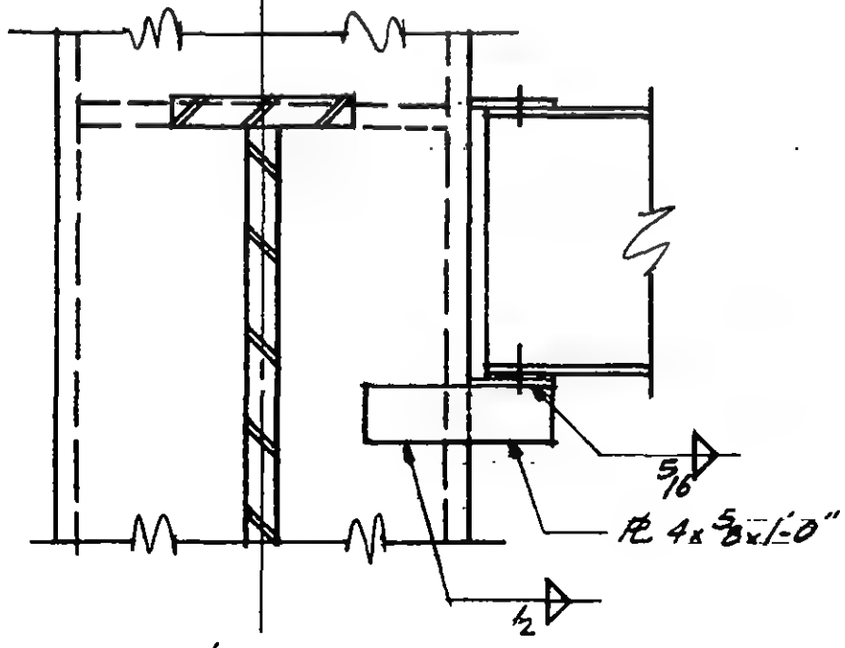

Section a-a
Section b-b, Opp. hand

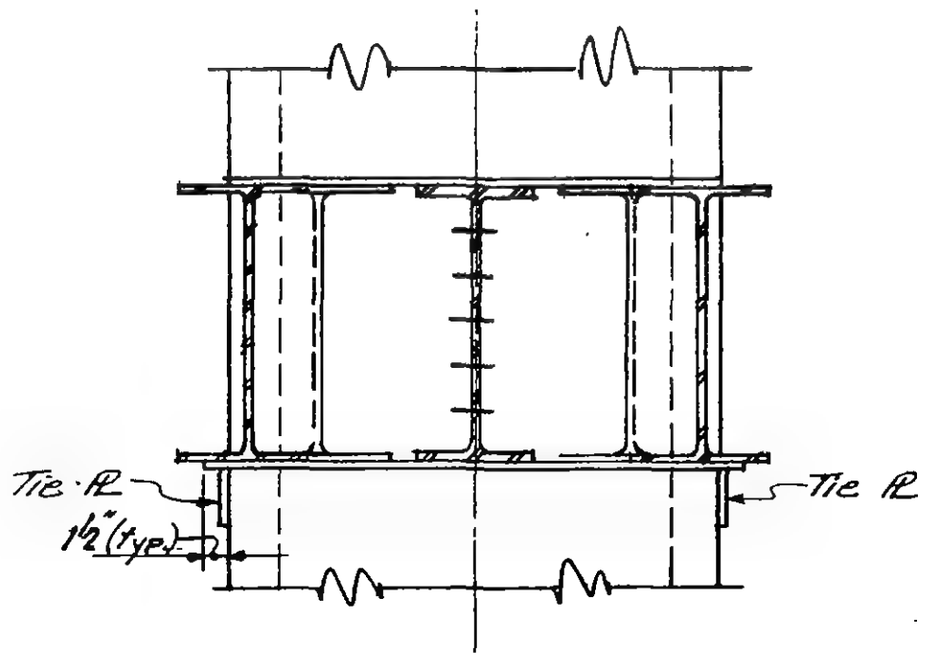

Section d-d

LICENSED PROFESSIONAL ENGINEER
LESLIE E. ROBERTSON
No. 34360
UNIVERSITY OF THE STATE OF NEW YORK

6-AB5-50.1

SKILLING - HELLE - CHRISTIANSEN - ROBERTSON Structural & Civil Engineers

PROJECT THE WORLD TRADE CENTER | TITLE CONNECTION DETAIL 852 C | DATE 9-15-67

REVISIONS

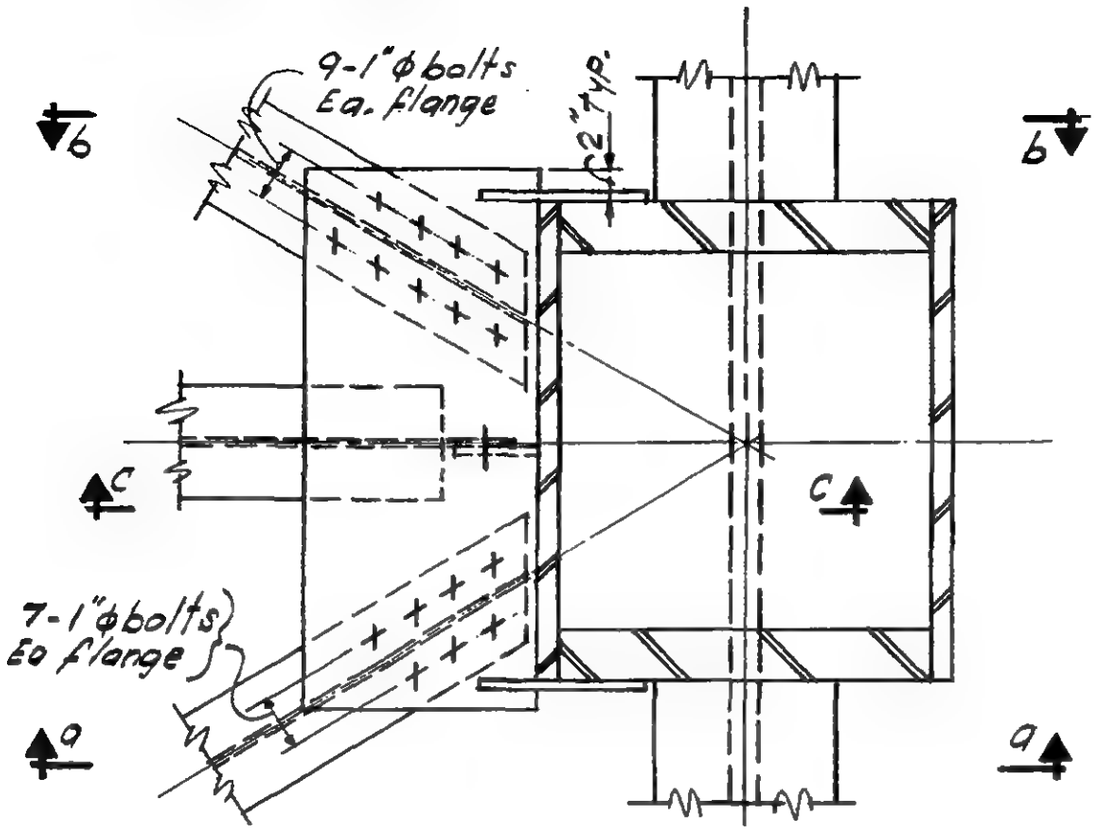

PLAN

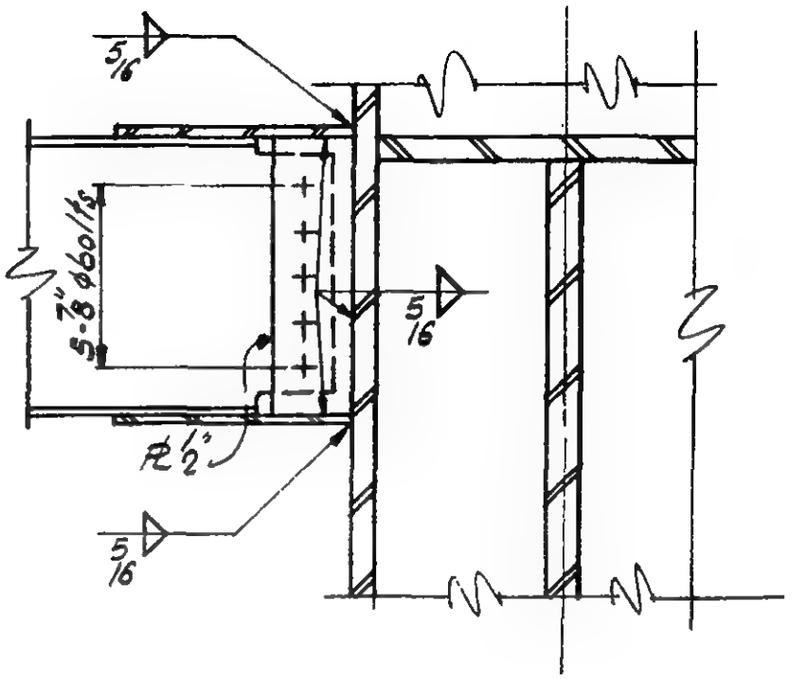

Section c-c

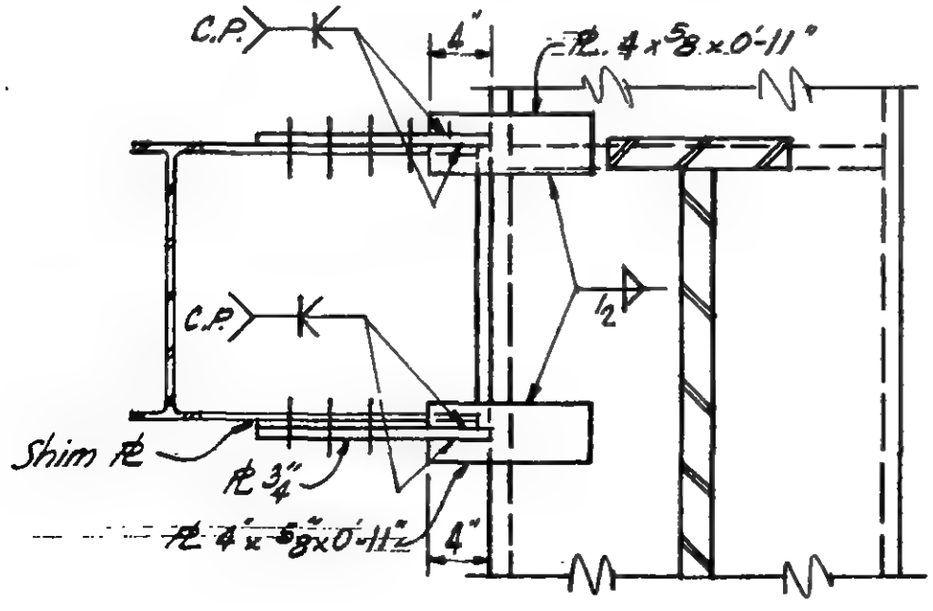

Section a-a
Section b-b, Opp. hand

LICENSED PROFESSIONAL ENGINEER LESLIE E. ROBERTSON No. 34360 STATE OF NEW YORK

6 - AB5 - 50.2

SKILLING - HELLE - CHRISTIANSEN - ROBERTSON — Structural & Civil Engineers

PROJECT: THE WORLD TRADE CENTER | TITLE: CONNECTION DETAIL 853A | DATE: 7-14-67

REVISIONS
9-29-67
10-31-67

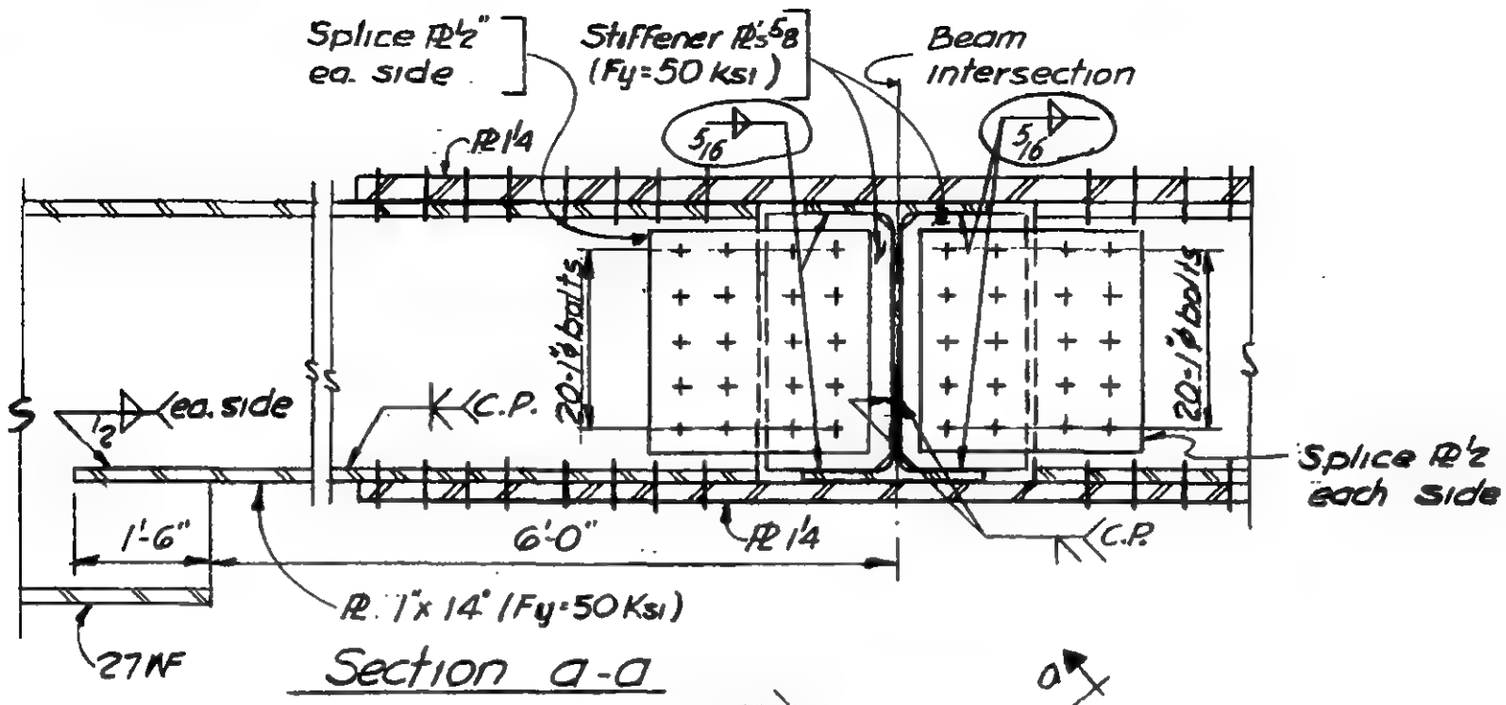

Section a-a

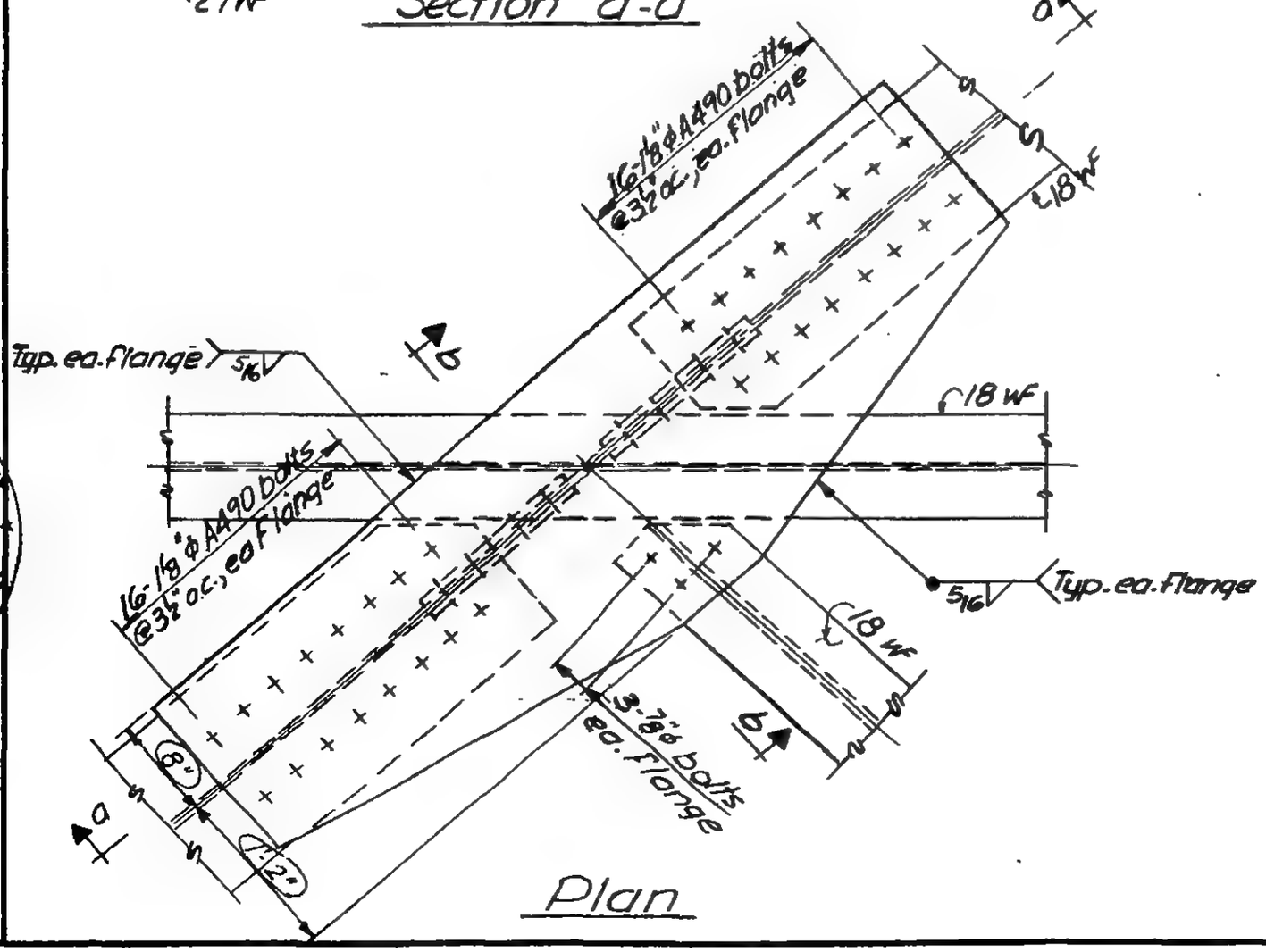

Plan

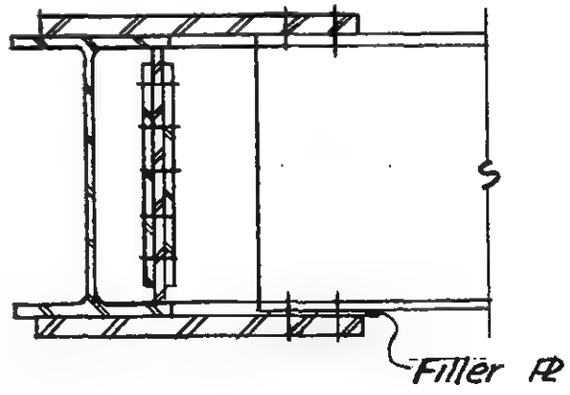

Section b-b

LICENSED PROFESSIONAL ENGINEER
LESLIE E. ROBERTSON
No. 34360
UNIVERSITY OF THE STATE OF NEW YORK

6-AB5-51

SKILLING - HELLE - CHRISTIANSEN - ROBERTSON Structural & Civil Engineers

PROJECT THE WORLD TRADE CENTER | TITLE CONNECTION DETAIL 853 B | DATE 9-29-67

REVISIONS

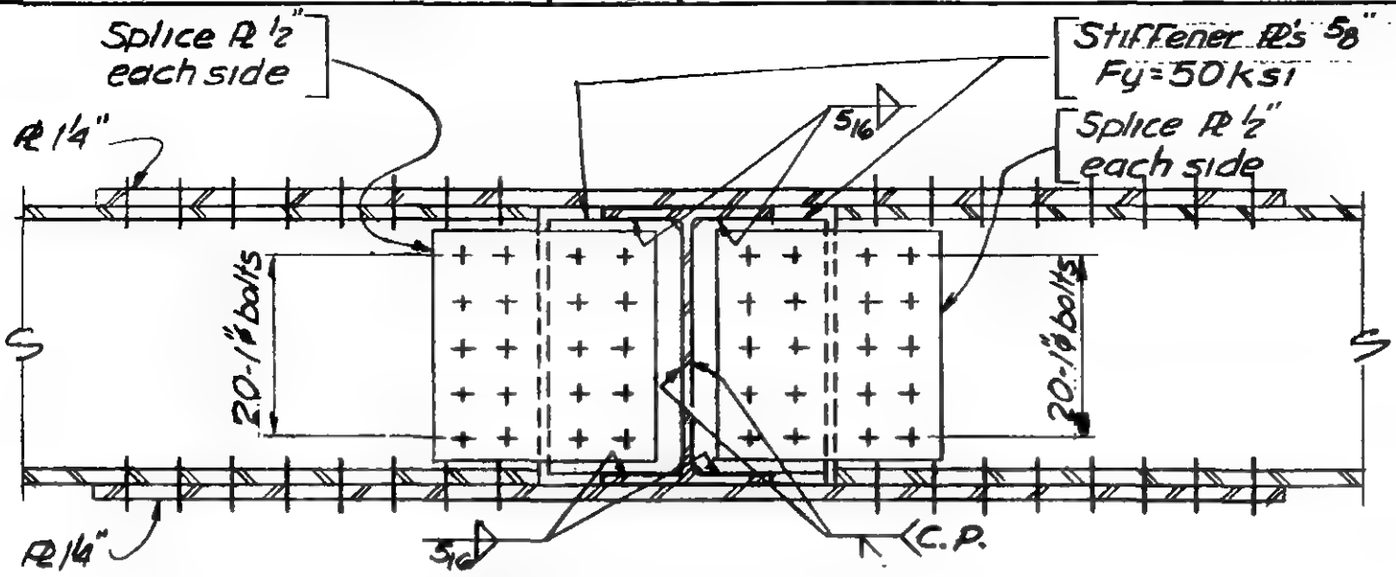

Section a-a

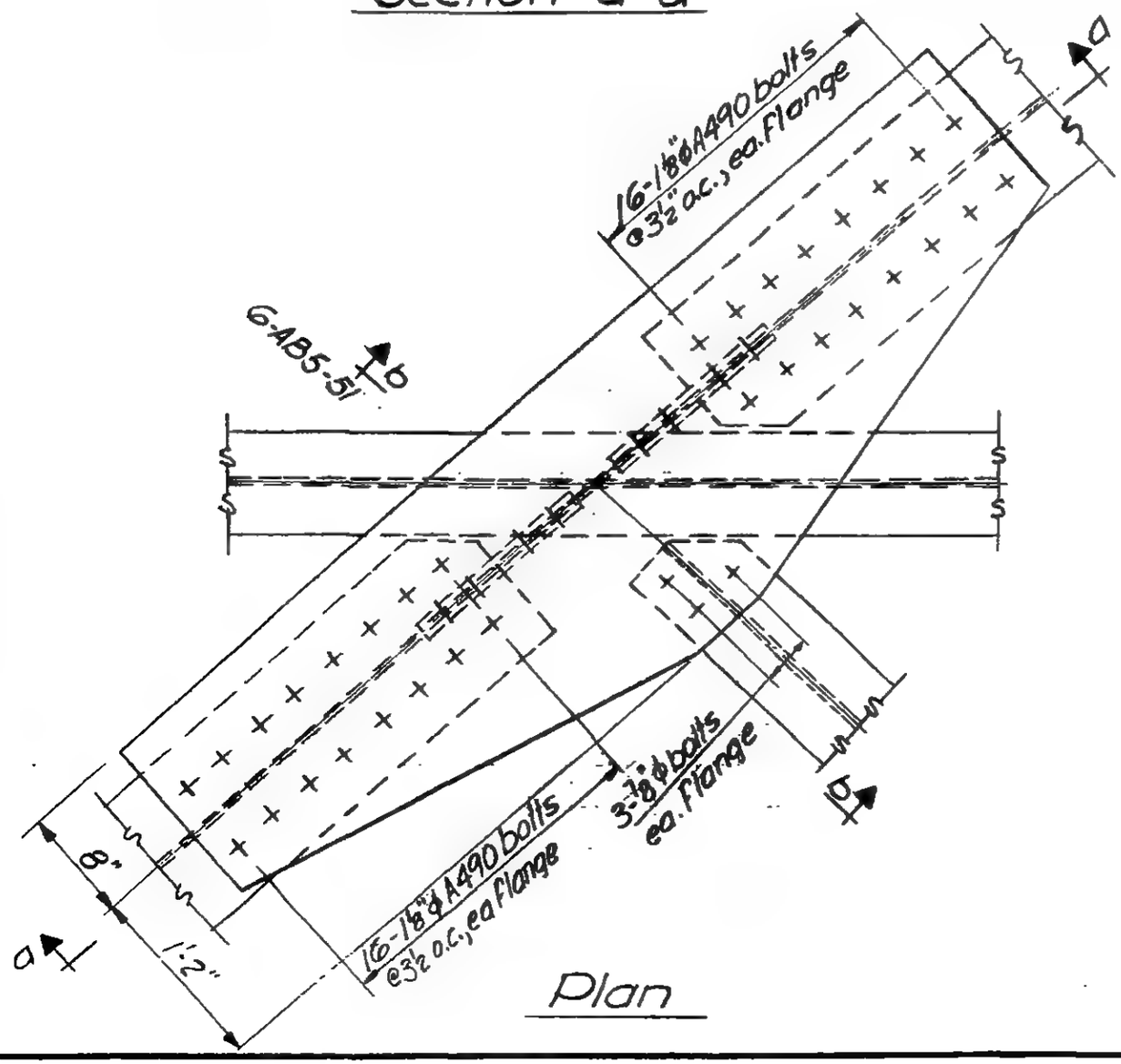

Plan

LICENSED PROFESSIONAL ENGINEER LESLIE E. ROBERTSON No. 34360 UNIVERSITY OF THE STATE OF NEW YORK

G-AB5-51.1

SKILLING - HELLE - CHRISTIANSEN - ROBERTSON Structural & Civil Engineers

PROJECT THE WORLD TRADE CENTER | TITLE CONNECTION DETAIL 854 A | DATE 9-15-67

REVISIONS

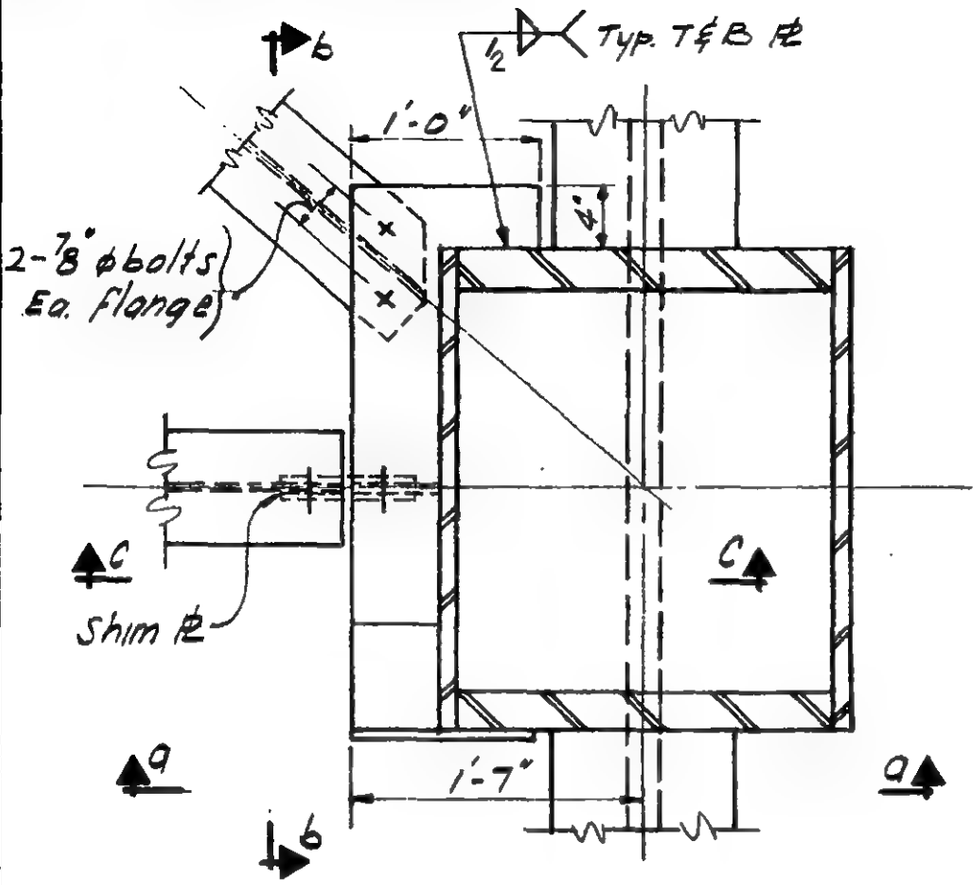

PLAN

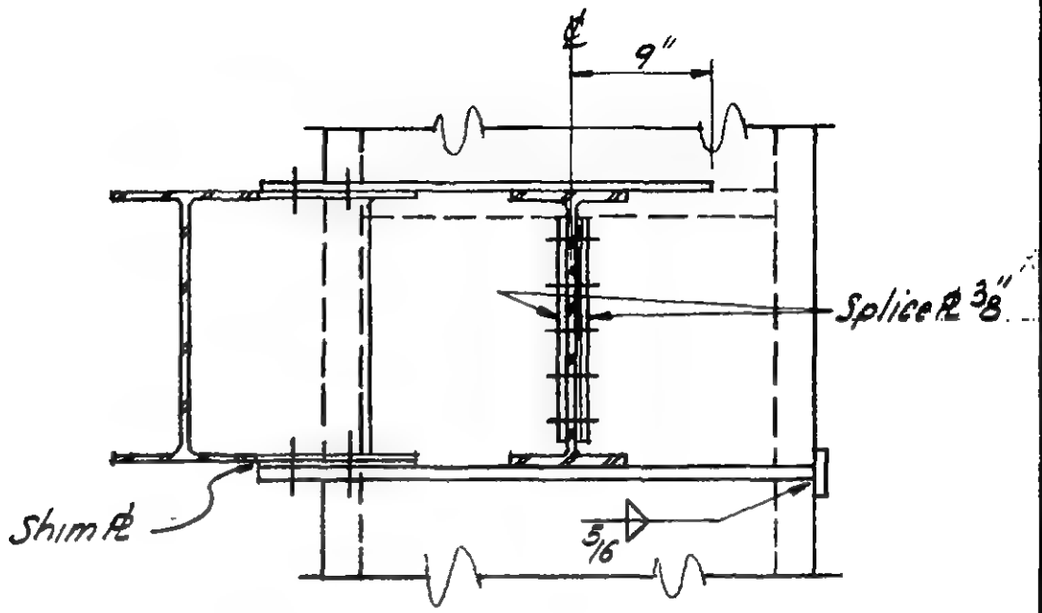

Section b-b

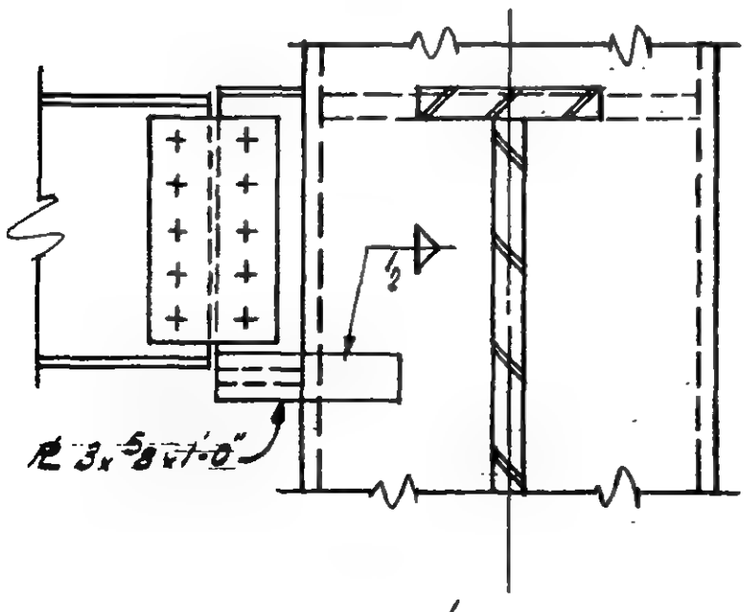

Section a-a

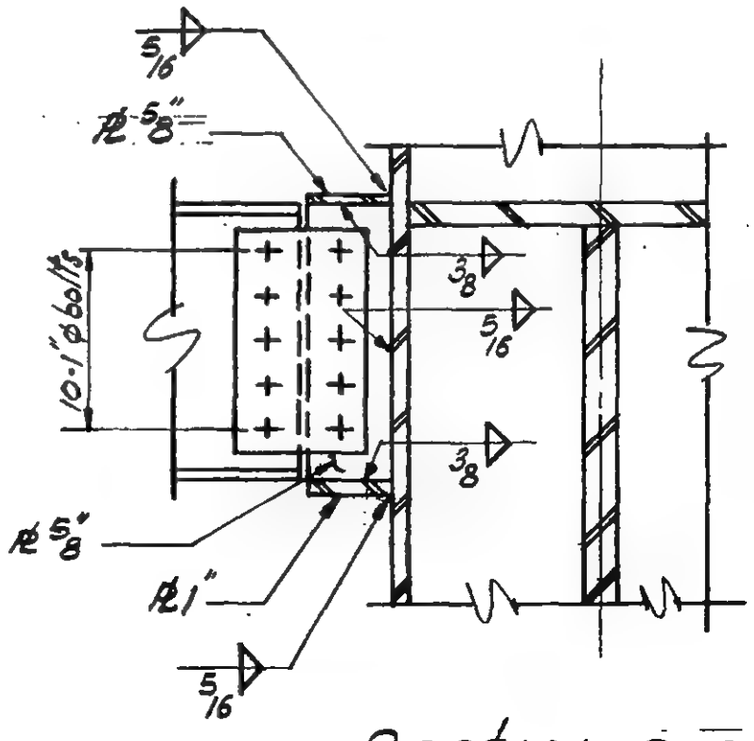

Section c-c

PROFESSIONAL ENGINEER
LESLIE E. ROBERTSON
No. 34360
UNIVERSITY OF THE STATE OF NEW YORK

6-AB5-52

SKILLING - HELLE - CHRISTIANSEN - ROBERTSON Structural & Civil Engineers

PROJECT THE WORLD TRADE CENTER | TITLE CONNECTION DETAIL 855 A & B | DATE 7-14-67

REVISIONS

9-15-67

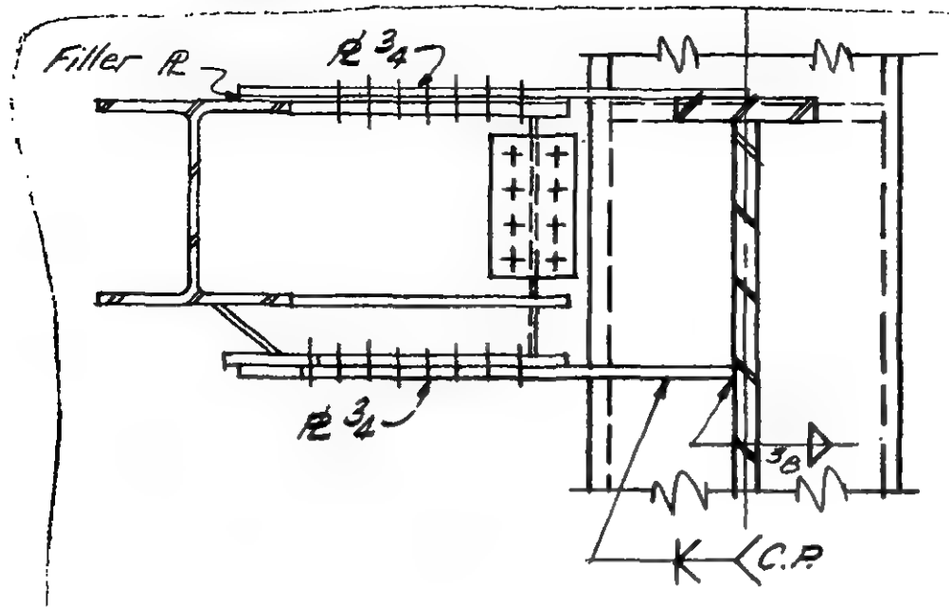

Section a-a

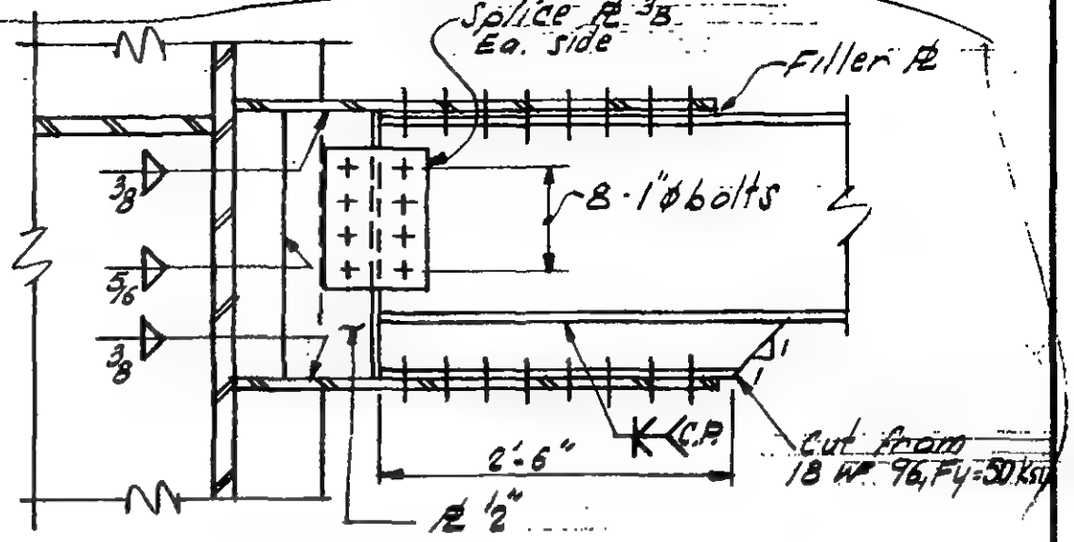

Section b-b

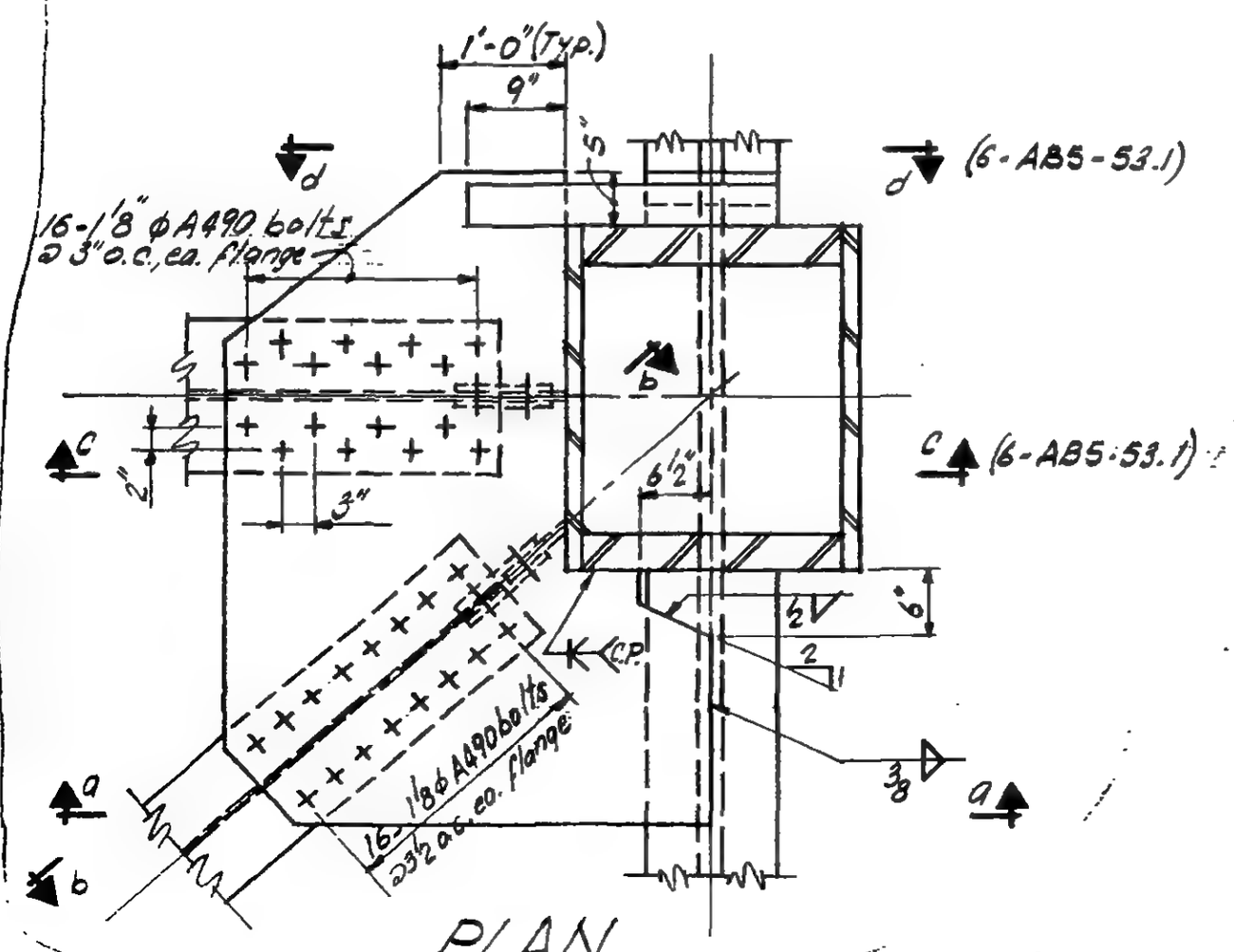

PLAN

LICENSED PROFESSIONAL ENGINEER
LESLIE E. ROBERTSON
No. 34360
UNIVERSITY OF THE STATE OF NEW YORK

6-ABS-53

SKILLING - HELLE - CHRISTIANSEN - ROBERTSON Structural & Civil Engineers

PROJECT THE WORLD TRADE CENTER | TITLE CONNECTION DETAIL 855 A & B | DATE 9-15-67

REVISIONS

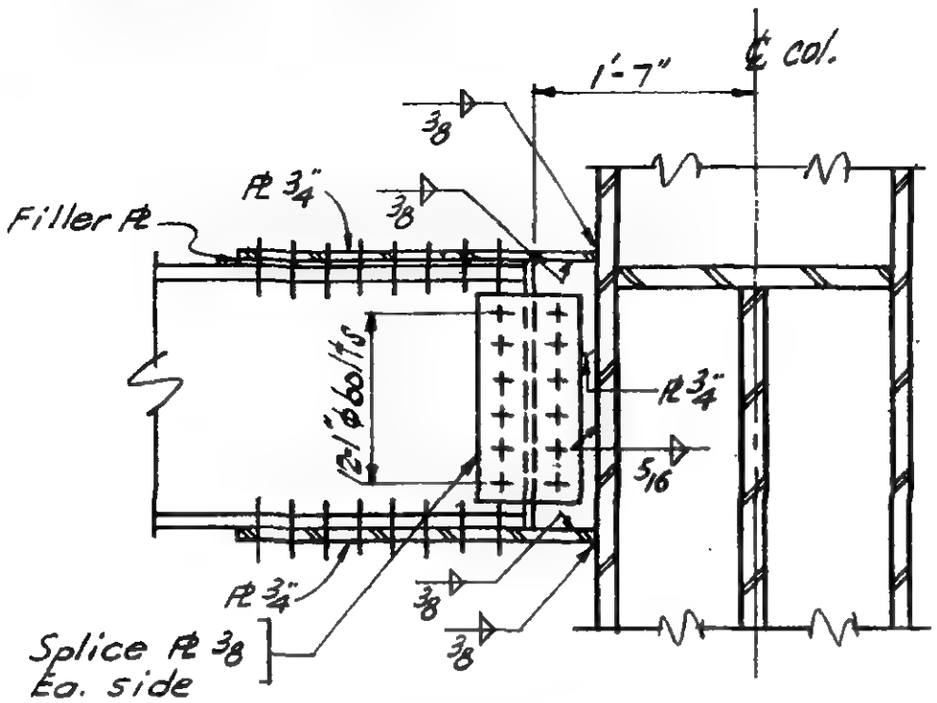

Section C-C

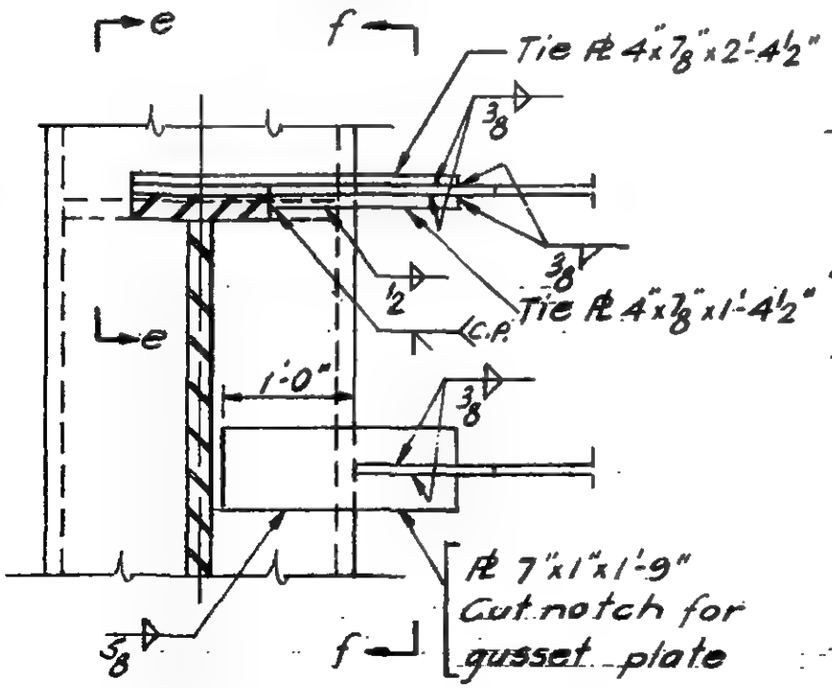

Section d-d

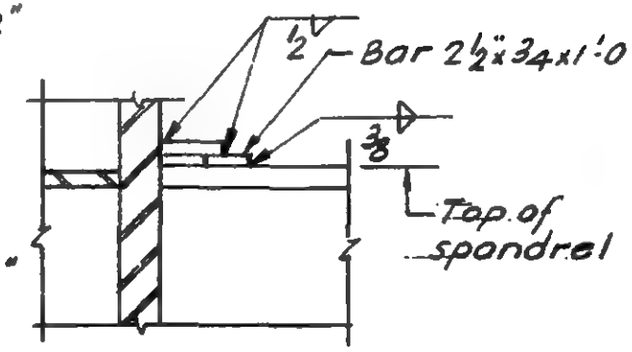

Section e-e

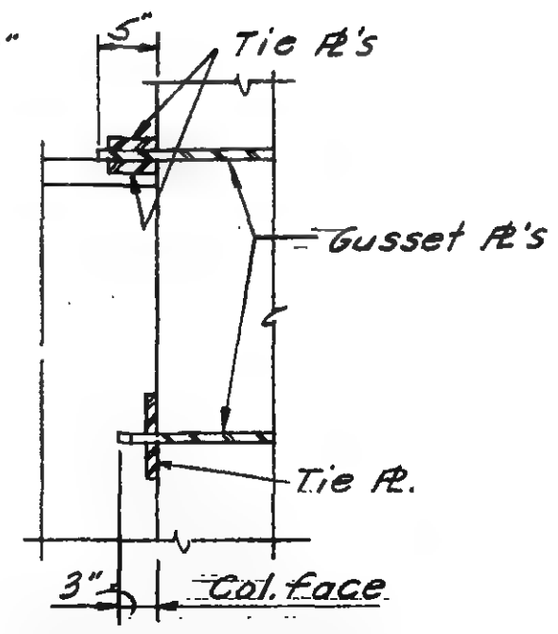

Section f-f

LICENSED PROFESSIONAL ENGINEER LESLIE E. ROBERTSON No. 34360 UNIVERSITY OF THE STATE OF NEW YORK

6-AB5-53.1

SKILLING - HELLE - CHRISTIANSEN - ROBERTSON Structural & Civil Engineers

PROJECT THE WORLD TRADE CENTER | TITLE CONNECTION DETAIL 856(A) | DATE 7-14-67

REVISIONS
9-29-67
10-31-67

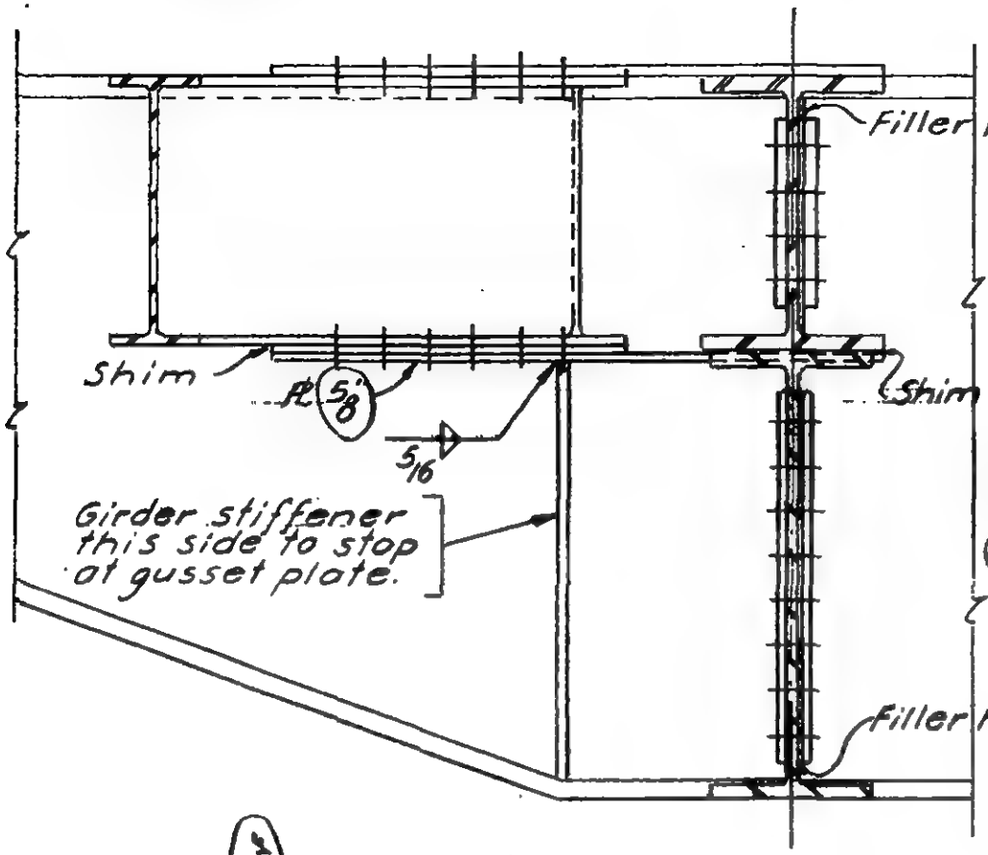

Section a-a

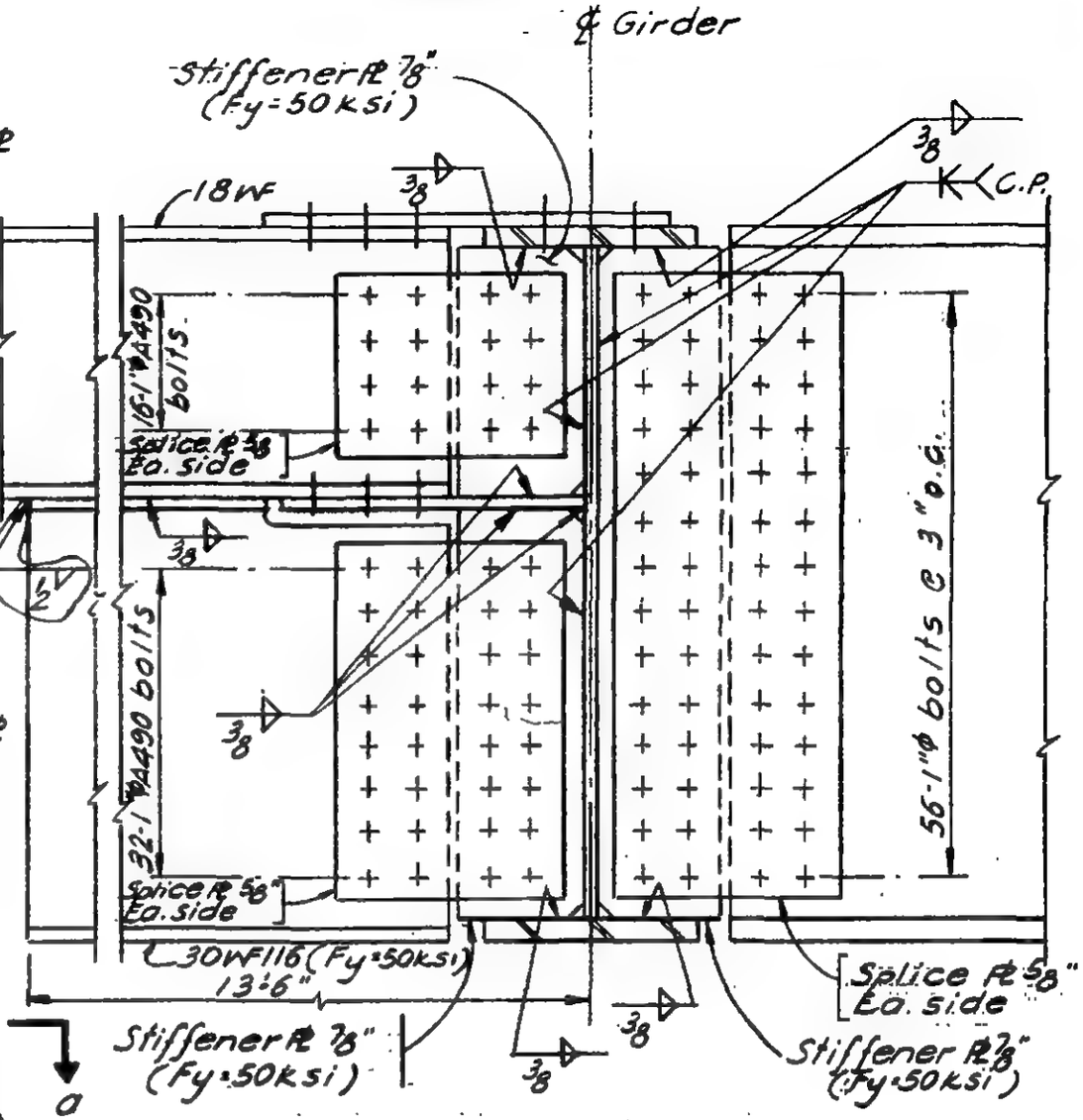

Section b-b

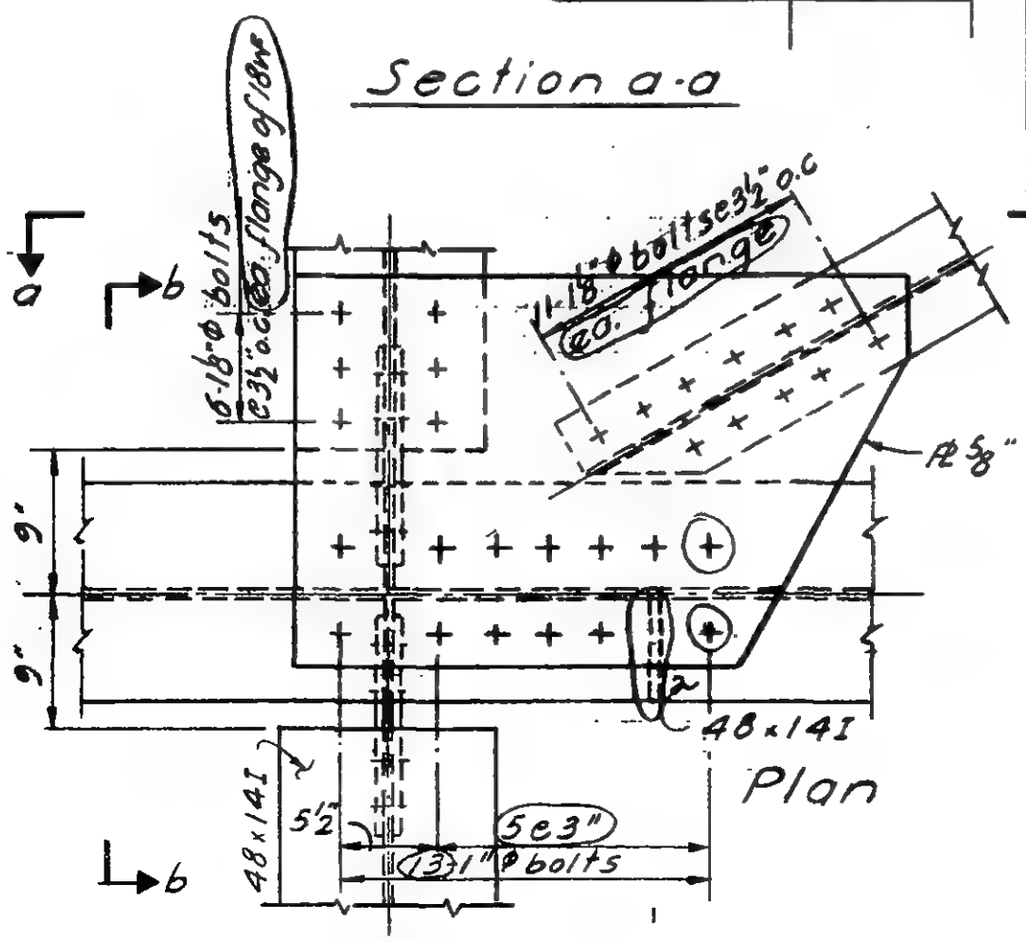

Plan

LICENSED PROFESSIONAL ENGINEER
LESLIE E. ROBERTSON
No. 34360
UNIVERSITY OF THE STATE OF NEW YORK

6-ABS-54

SKILLING - HELLE - CHRISTIANSEN - ROBERTSON Structural & Civil Engineers

PROJECT THE WORLD TRADE CENTER | TITLE CONNECTION DETAIL 857 A, B & C | DATE 9-29-67

REVISIONS

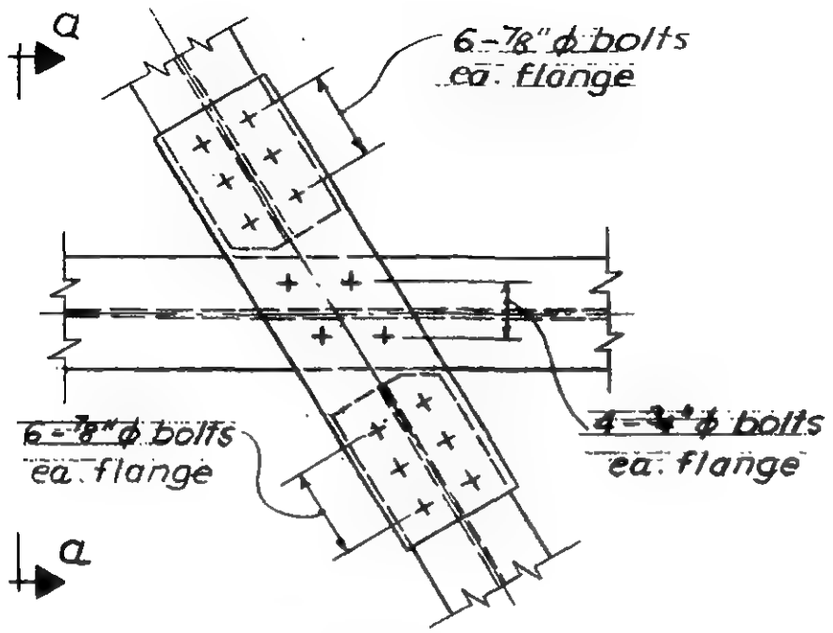

Plan

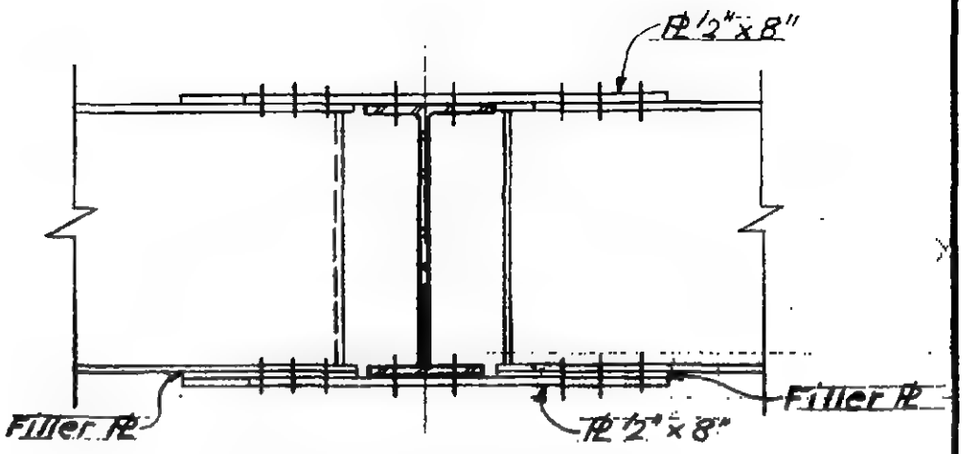

Section a-a

DETAIL 857 A

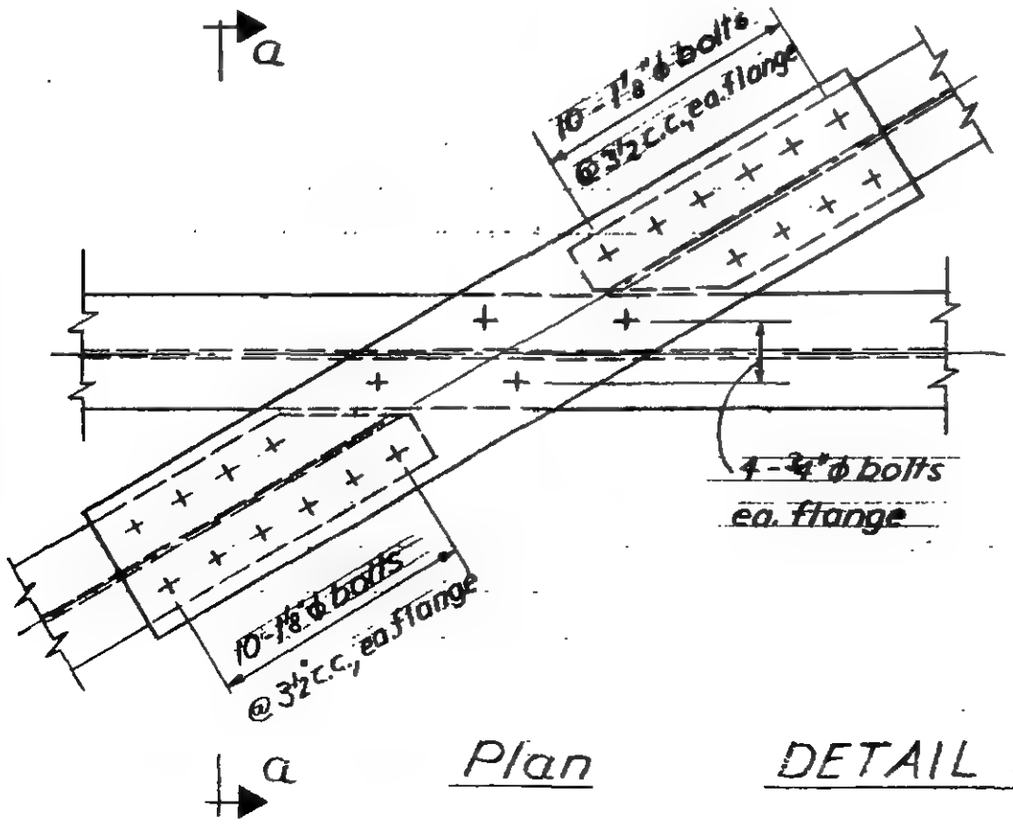

Plan

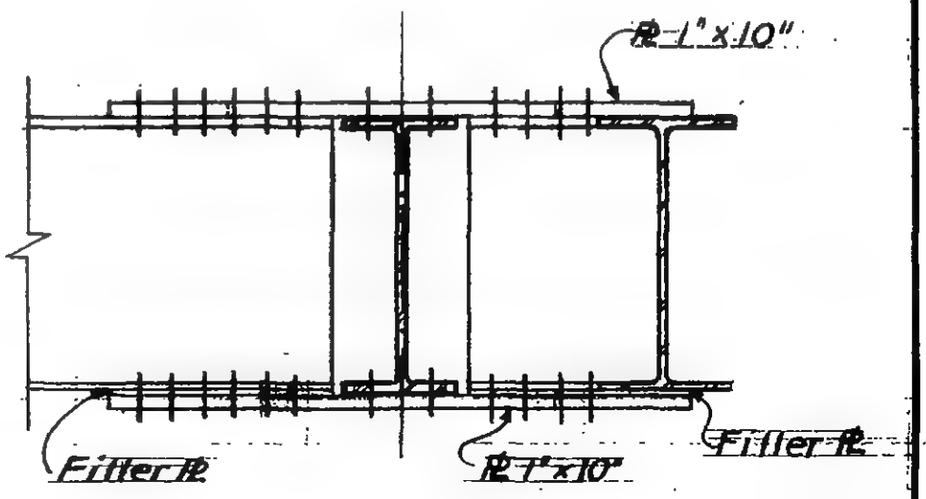

Section a-a

DETAIL 857 B & C

LICENSED PROFESSIONAL ENGINEER LESLIE E. ROBERTSON No. 34360 UNIVERSITY OF THE STATE OF NEW YORK

6-AB5-55

SKILLING - HELLE - CHRISTIANSEN - ROBERTSON Structural & Civil Engineers

PROJECT THE WORLD TRADE CENTER | TITLE CONNECTION DETAIL 857 D, E & F | DATE 9-29-67

REVISIONS

10/31/67

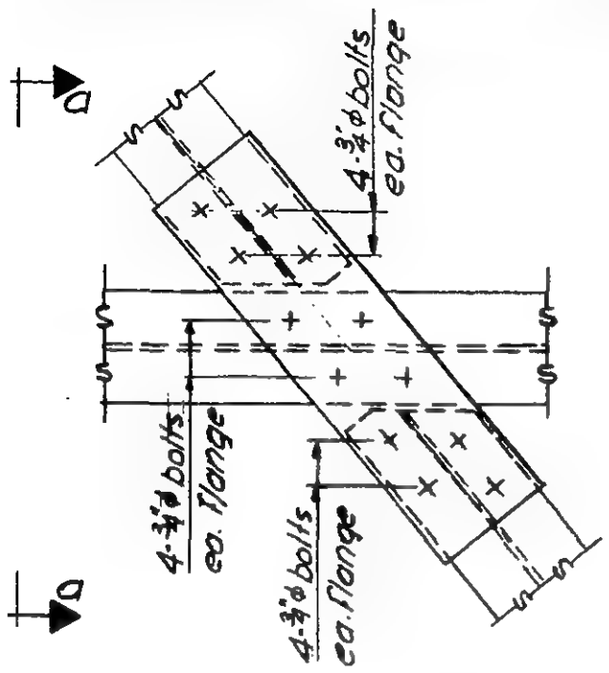

Plan
DET. 857 D

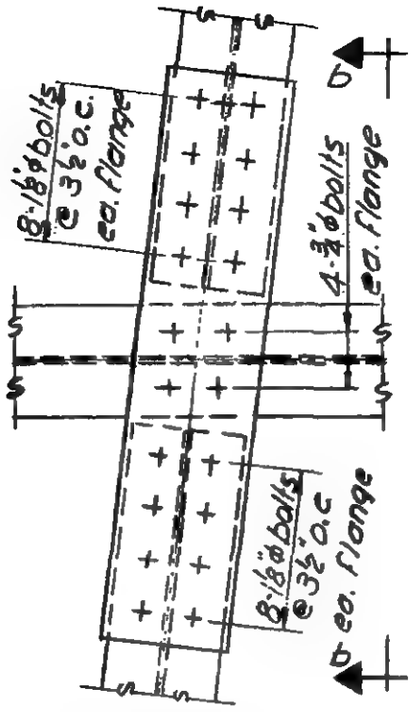

Plan
DET. 857 E

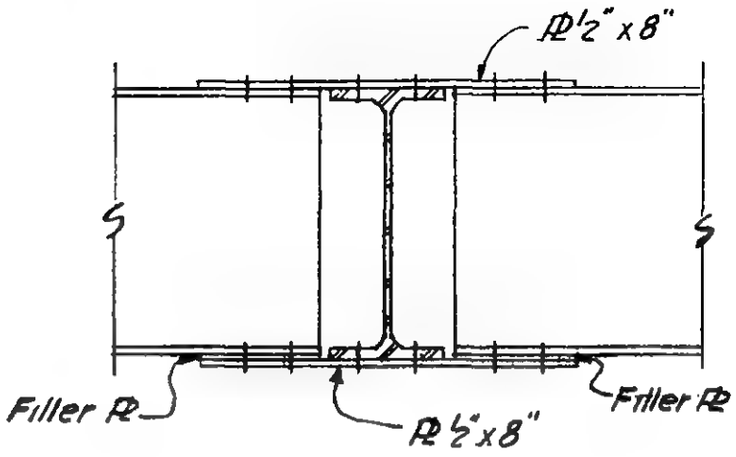

Section a-a
Section c-c, SIMILAR

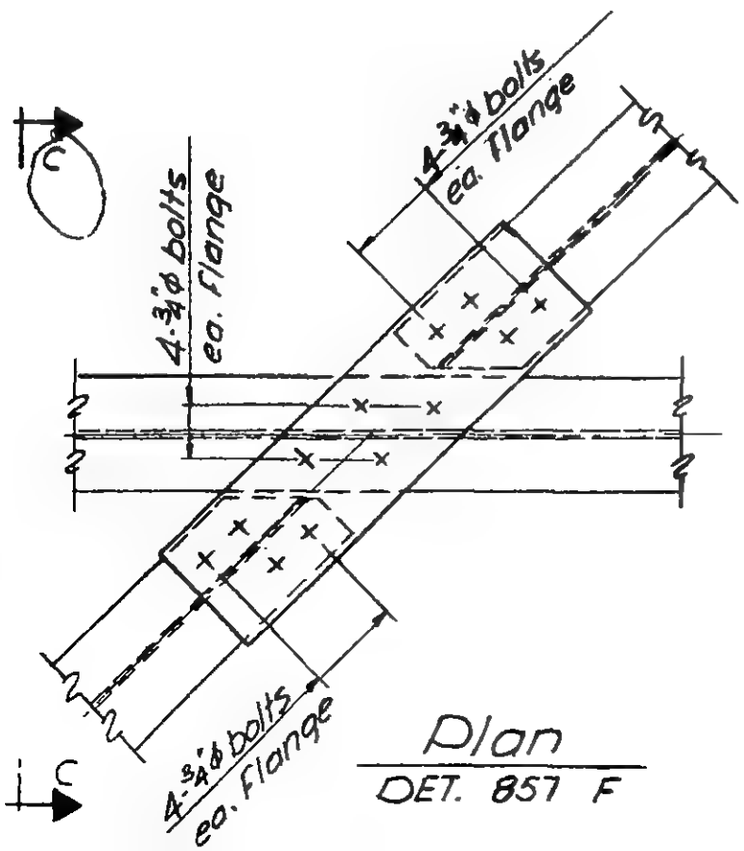

Plan
DET. 857 F

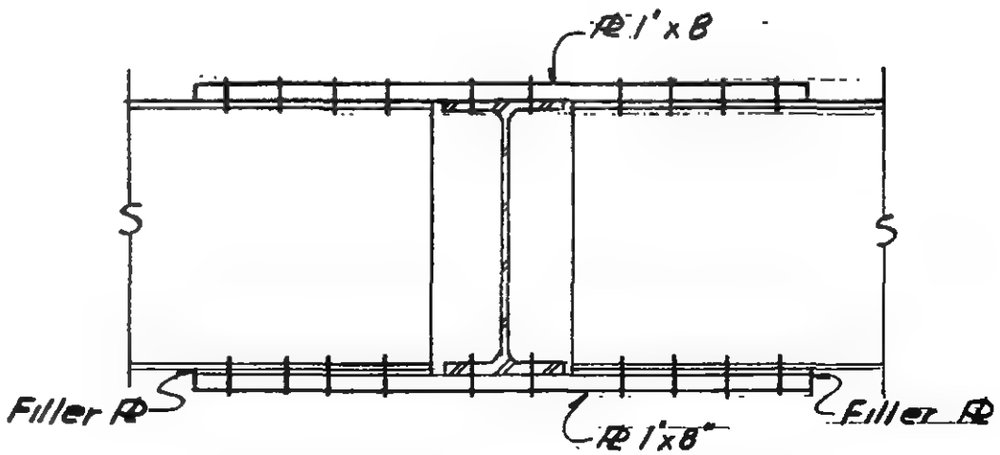

Section b-b

LICENSED PROFESSIONAL ENGINEER
LESLIE E. ROBERTSON
No. 34360
UNIVERSITY OF THE STATE OF NEW YORK

G-AB5-55.1

SKILLING - HELLE - CHRISTIANSEN - ROBERTSON Structural & Civil Engineers

PROJECT THE WORLD TRADE CENTER | TITLE CONNECTION DETAIL 857 G, H & J | DATE 9-29-67

1 REVISIONS

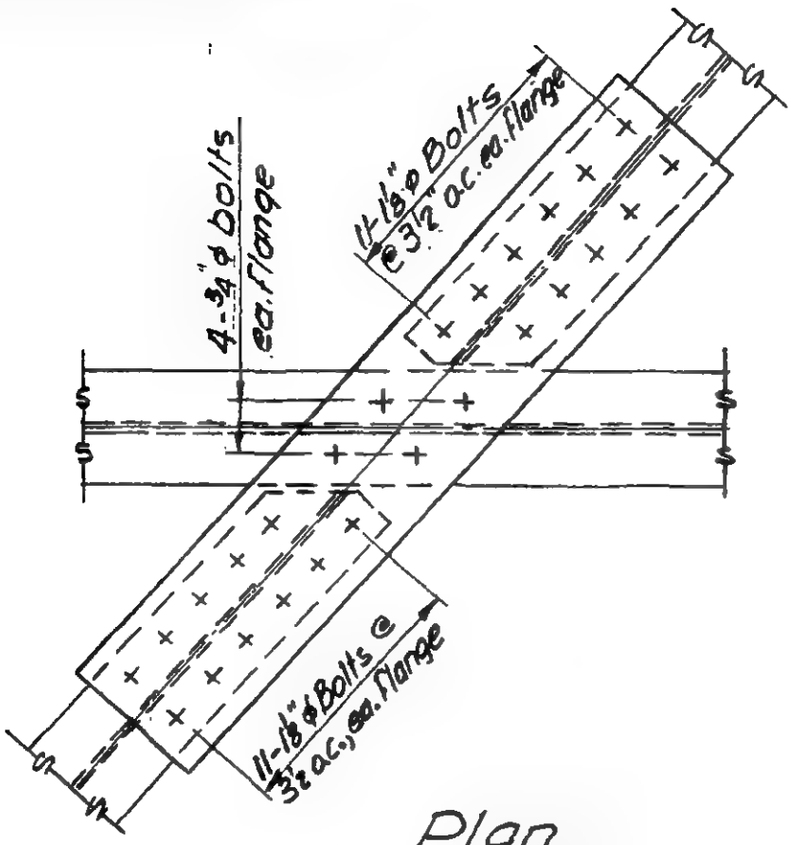

Plan
Det. 857 G

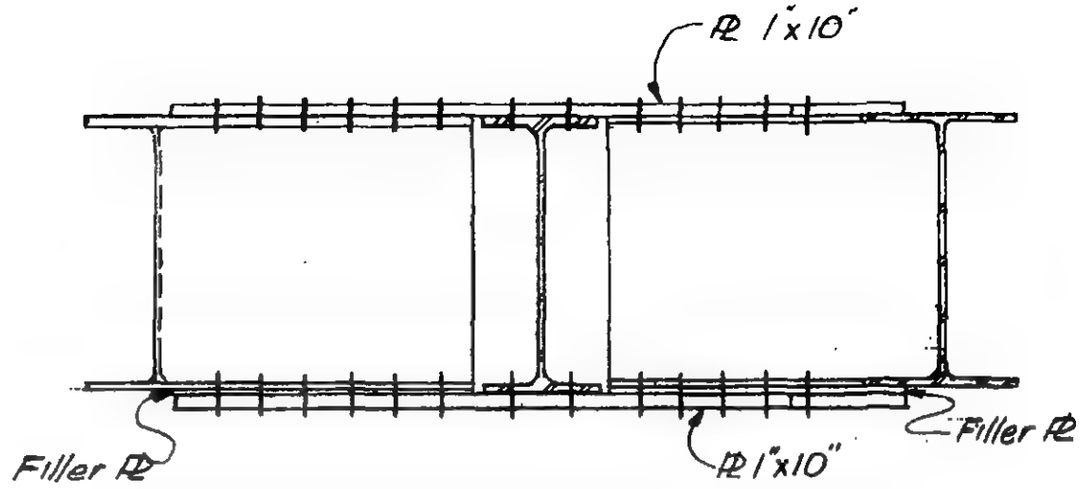

Section a-a

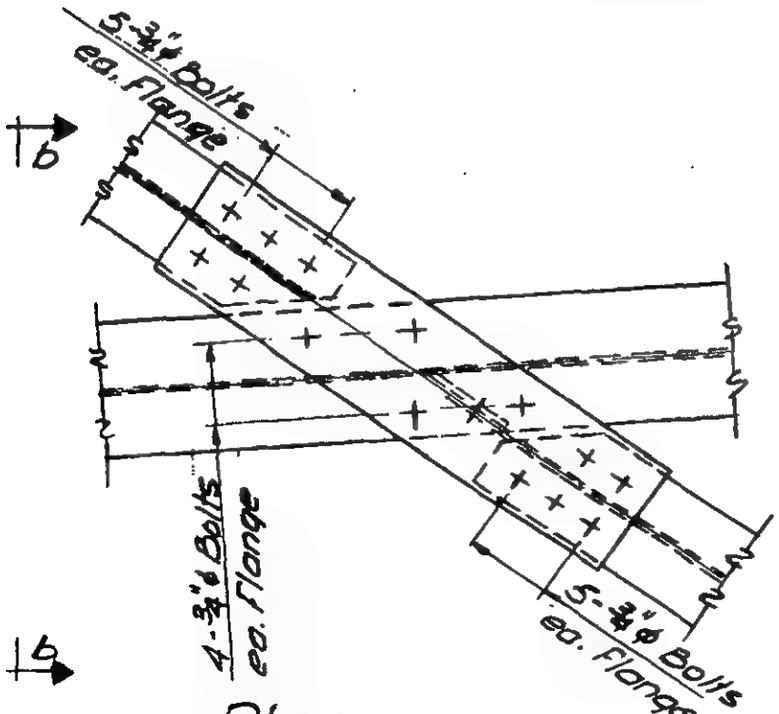

Plan
Det. 857 H & J

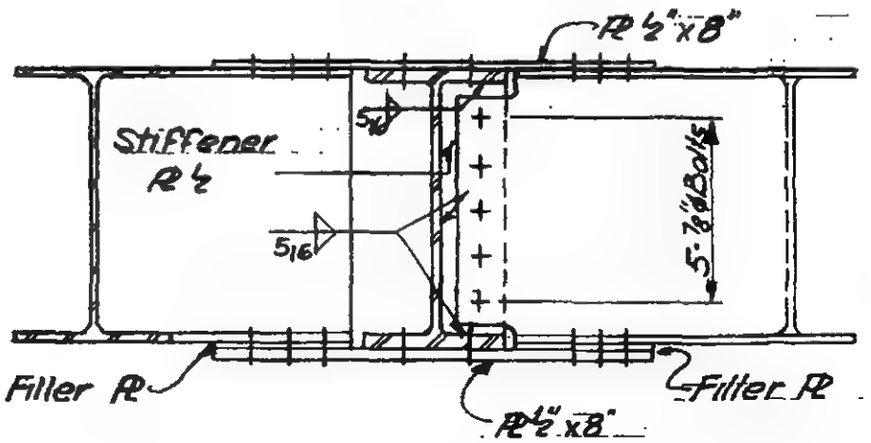

Section b-b

LICENSED PROFESSIONAL ENGINEER
LESLIE E. ROBERTSON
No. 34360
UNIVERSITY OF THE STATE OF NEW YORK

6-AB5-55.2

SKILLING - HELLE - CHRISTIANSEN - ROBERTSON Structural & Civil Engineers

PROJECT THE WORLD TRADE CENTER | TITLE CONNECTION DETAIL 858A | DATE 9-15-67

REVISIONS

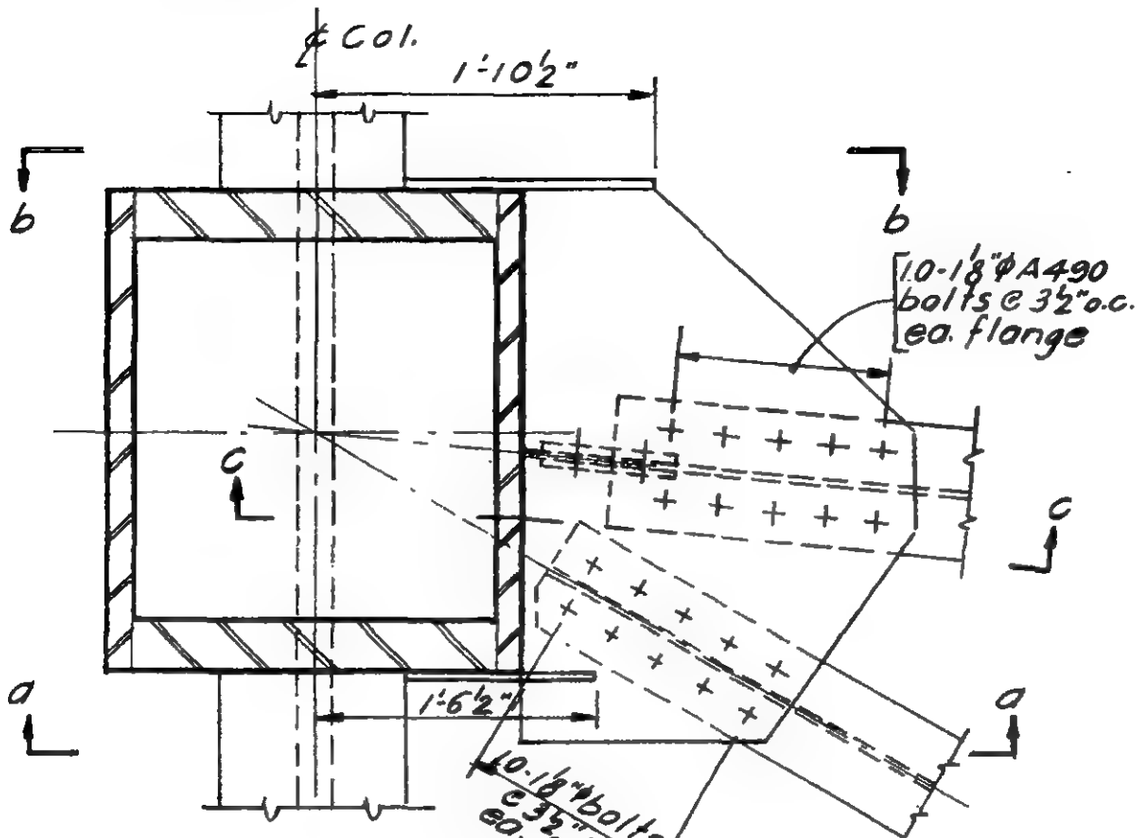

Plan

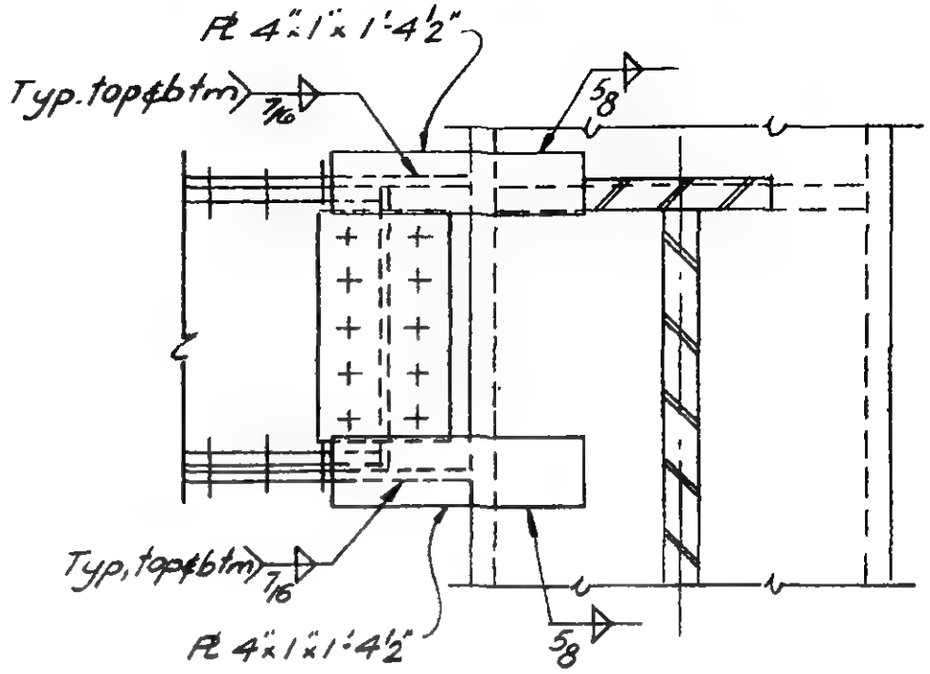

Section b-b

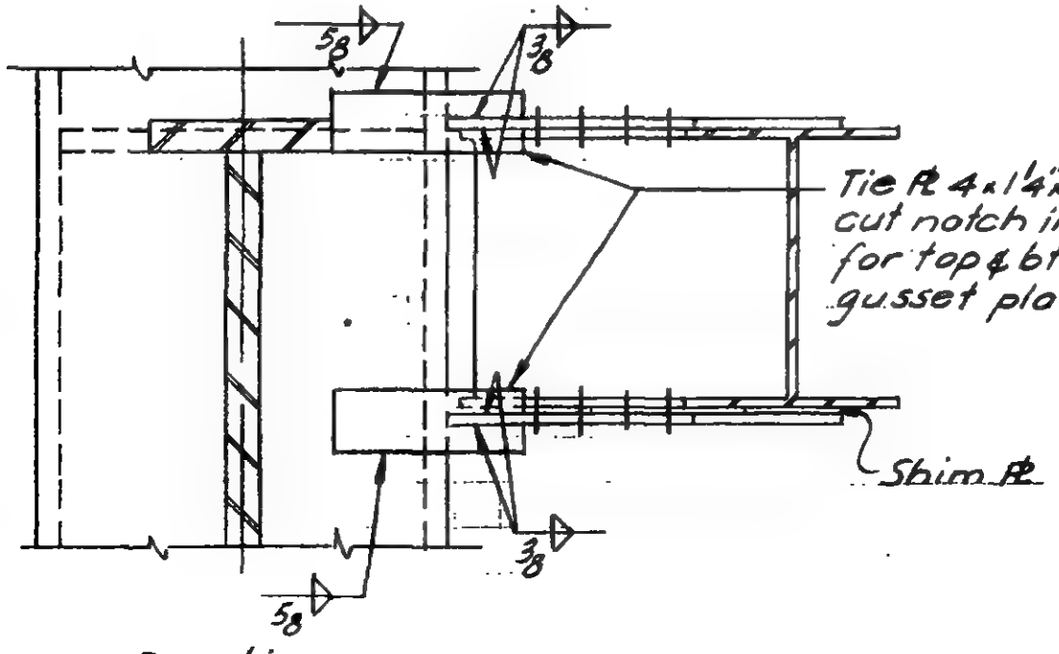

Section a-a

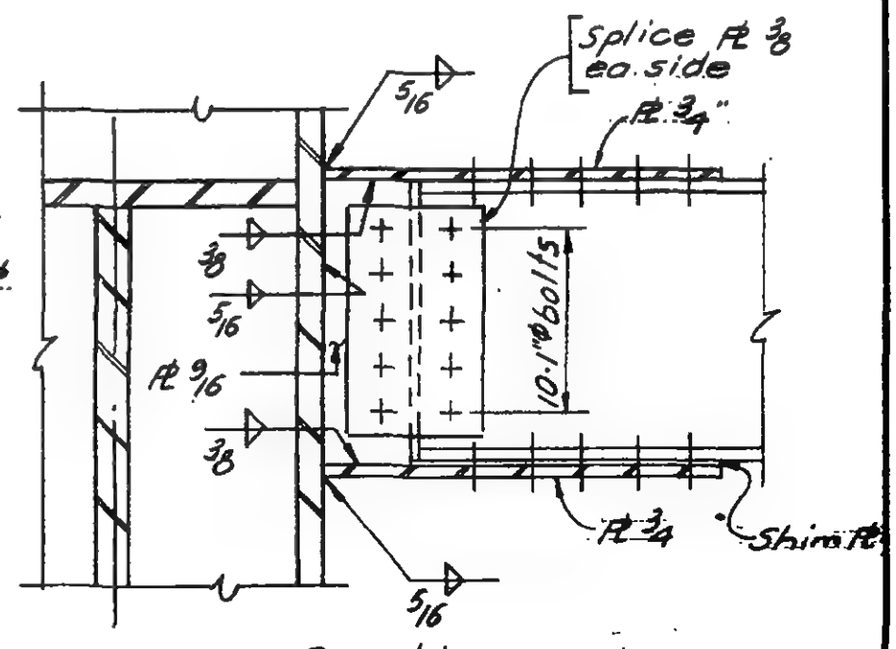

Section c-c

LICENSED PROFESSIONAL ENGINEER
LESLIE E. ROBERTSON
No. 34360
UNIVERSITY OF THE STATE OF NEW YORK

6-AB5-56

SKILLING - HELLE - CHRISTIANSEN - ROBERTSON Structural & Civil Engineers

PROJECT THE WORLD TRADE CENTER | TITLE CONNECTION DETAIL 859A | DATE 9-29-67

REVISIONS

10-31-67

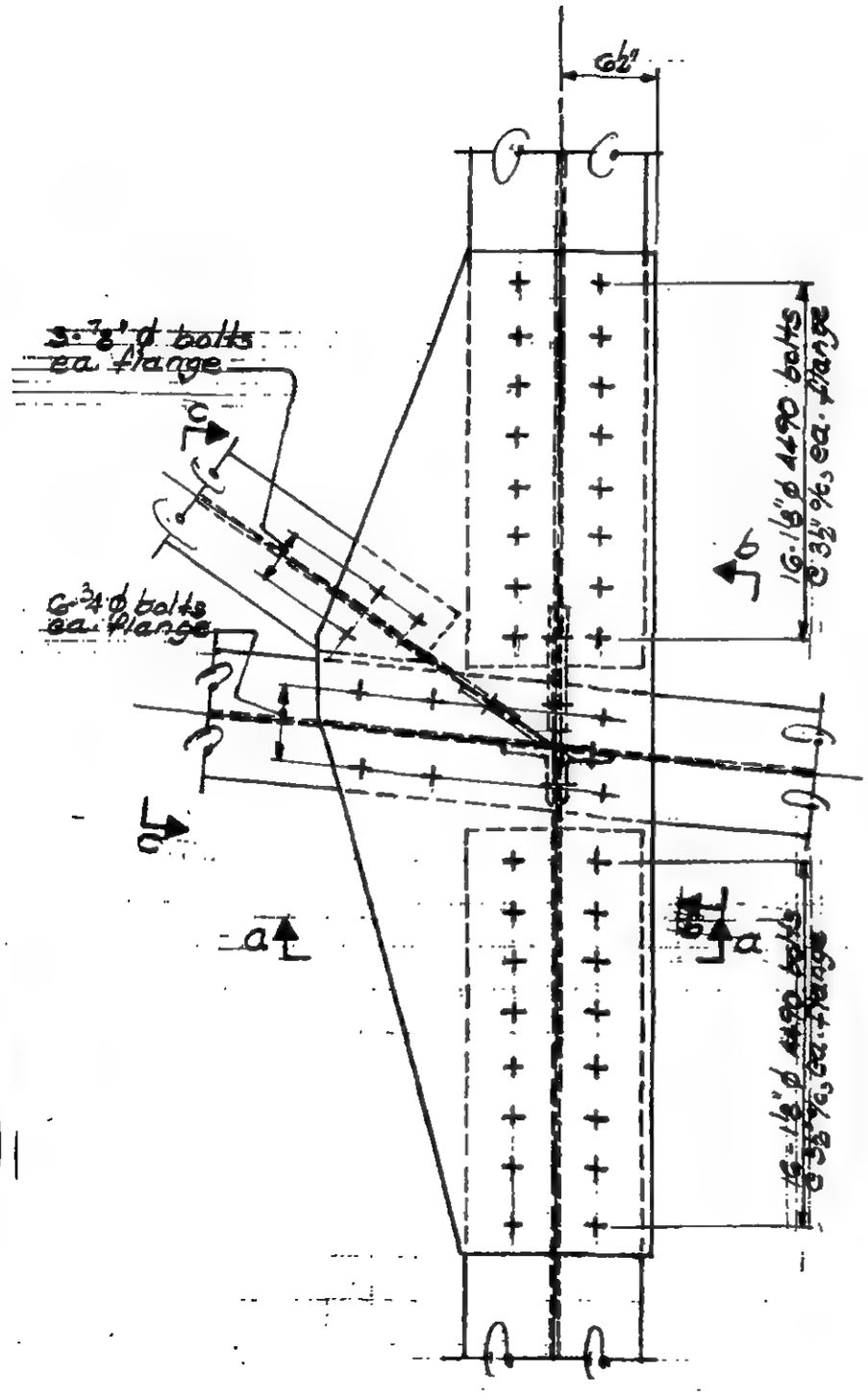

PLAN

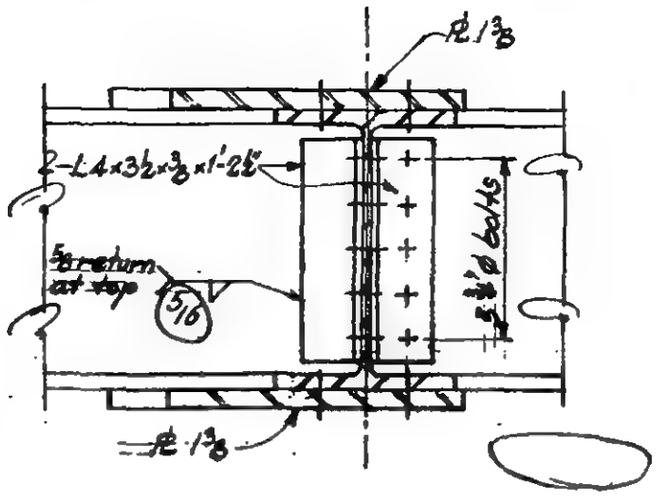

Section a-a

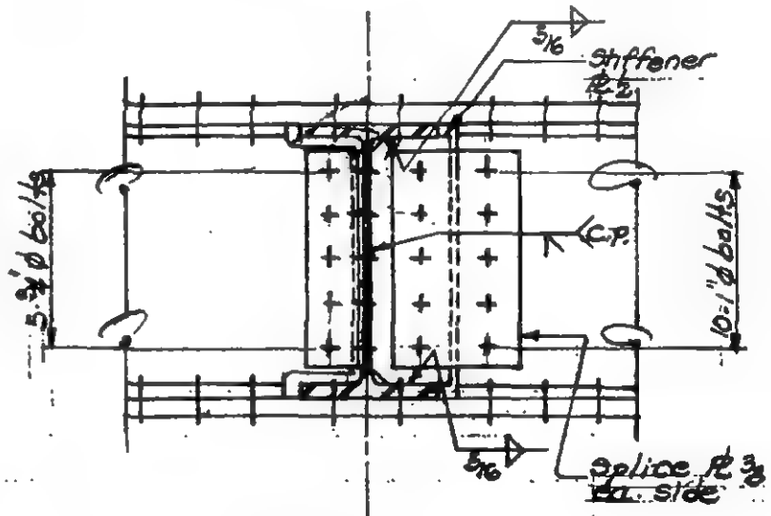

Section b-b

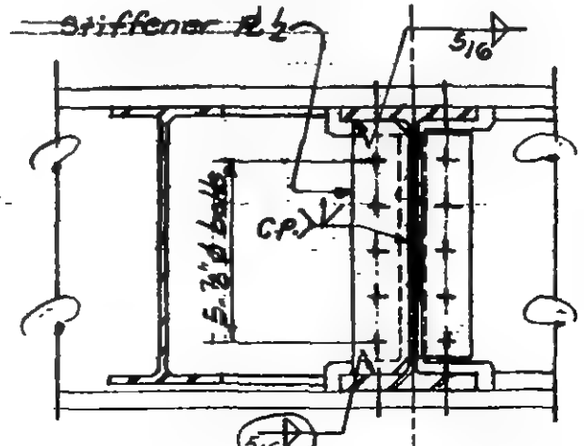

Section c-c

LICENSED PROFESSIONAL ENGINEER
LESLIE E. ROBERTSON
No. 34360
UNIVERSITY OF THE STATE OF NEW YORK

G-485-57

SKILLING - HELLE - CHRISTIANSEN - ROBERTSON Structural & Civil Engineers

PROJECT THE WORLD TRADE CENTER | TITLE CONNECTION DETAIL 859 B | DATE 9-29-67

REVISIONS

10-31 67

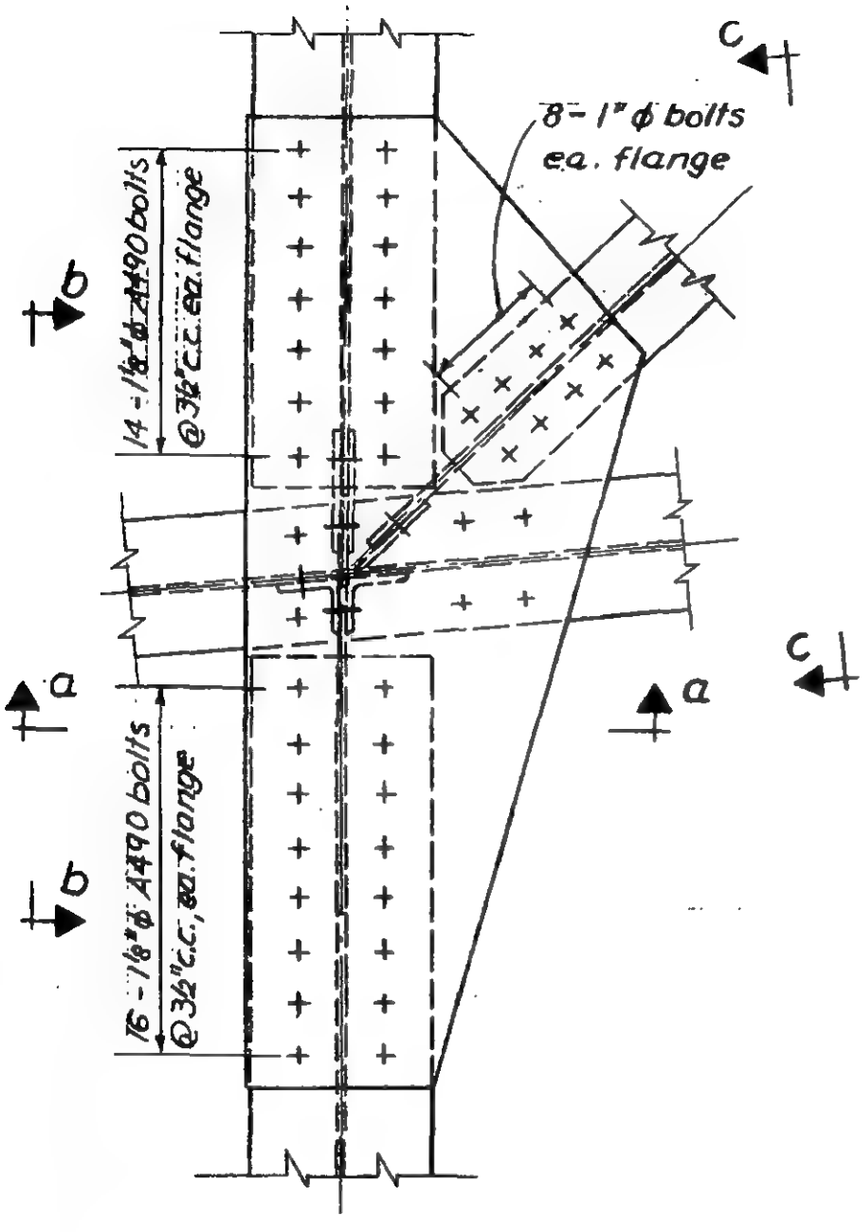

Plan

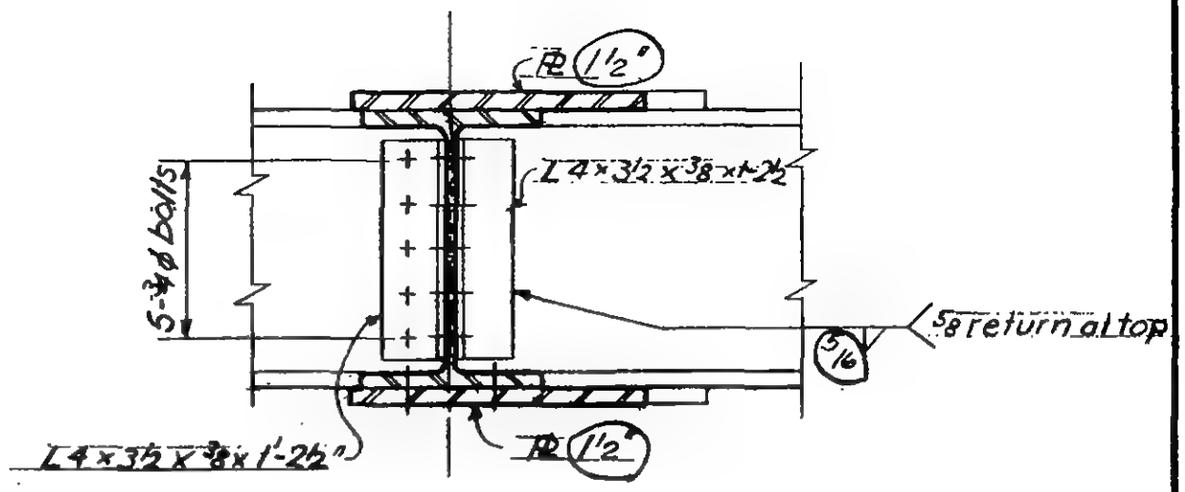

Section a-a

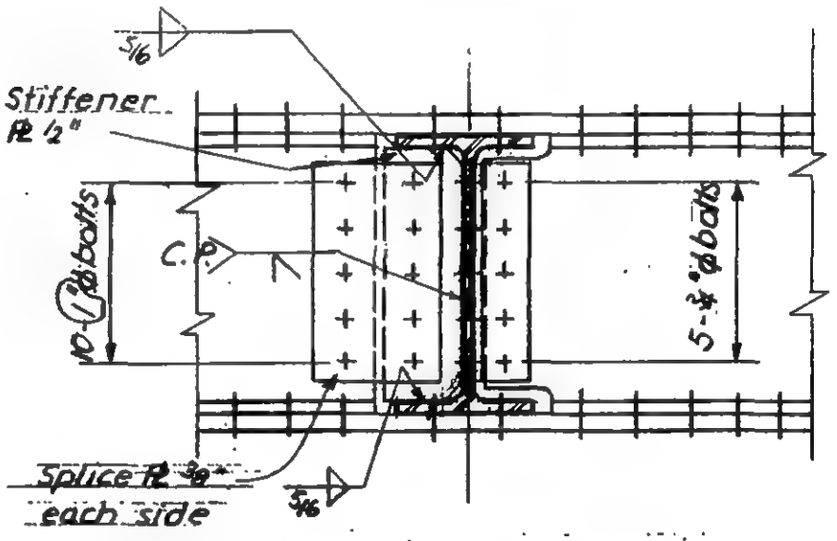

Section b-b

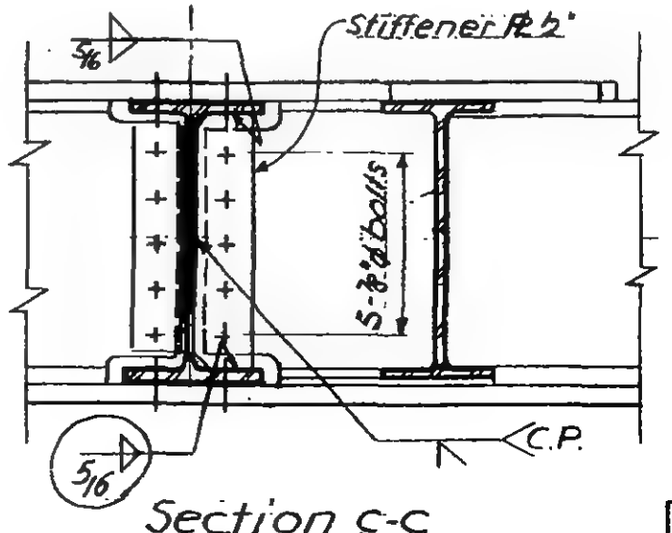

Section c-c

6-AB5-57.1

LICENSED PROFESSIONAL ENGINEER
LESLIE E. ROBERTSON
No. 34360
UNIVERSITY OF THE STATE OF NEW YORK

SKILLING - HELLE - CHRISTIANSEN - ROBERTSON Structural & Civil Engineers

PROJECT: THE WORLD TRADE CENTER | TITLE: CONNECTION DETAIL 860 A, B & C | DATE: 9-29-67

REVISIONS
10-31-67

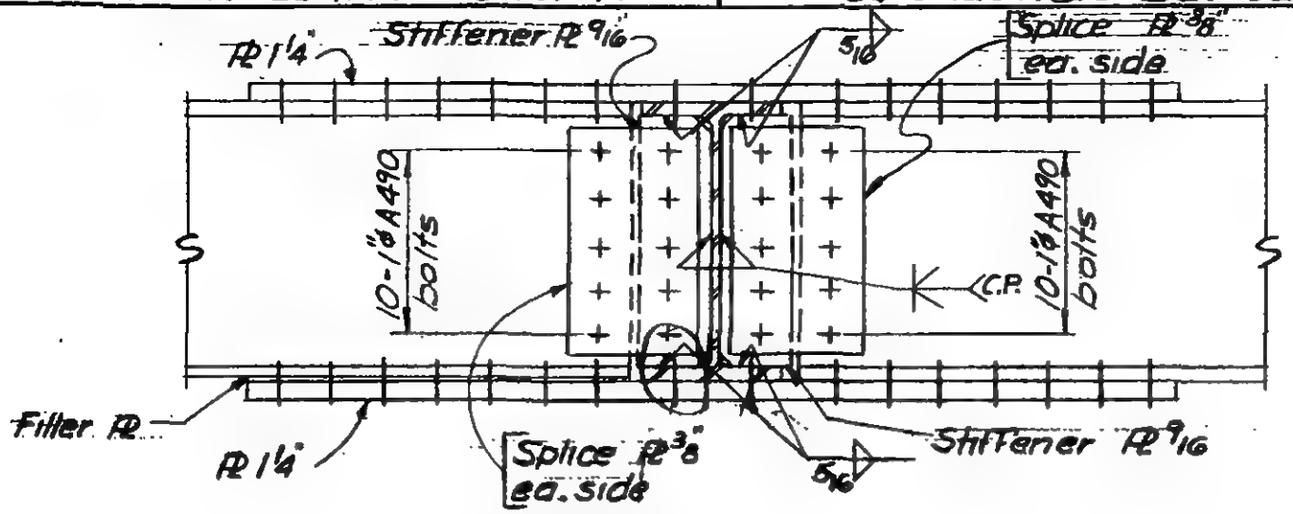

Section a-a

Section b-b SIMILAR

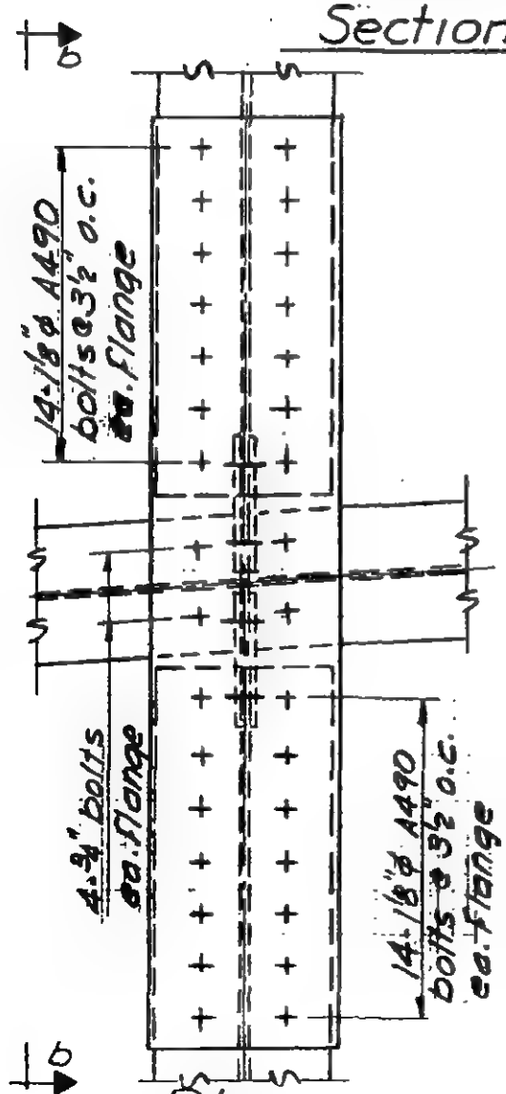

Plan

DET. 860 A - As Shown

DET. 860 B - Opp. Hand

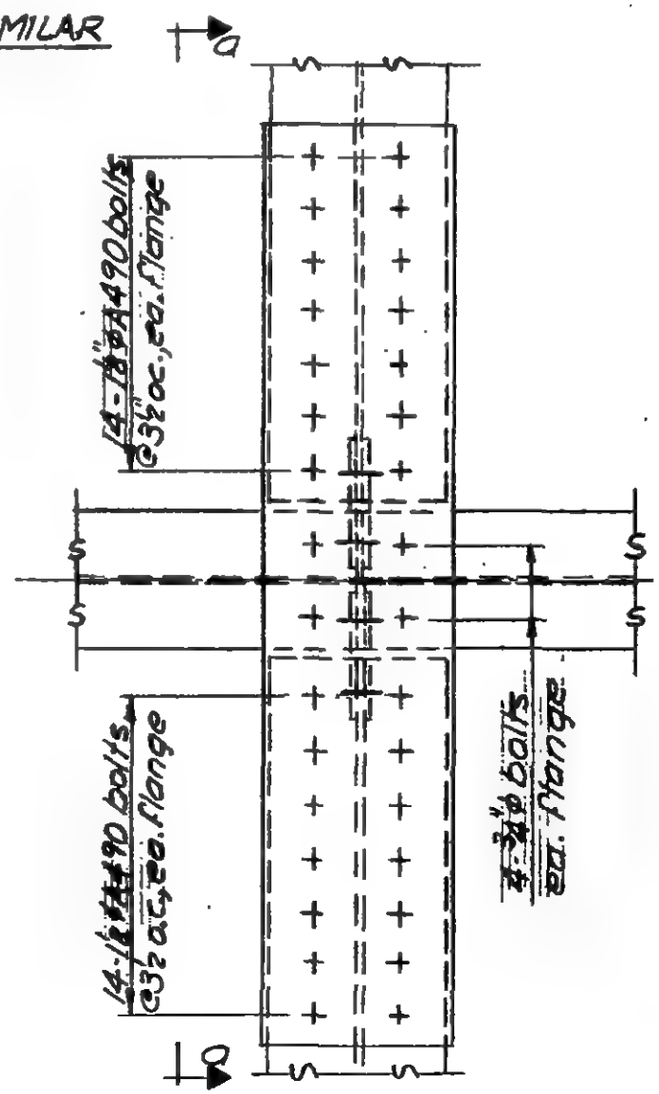

Plan

DET. 860 C

LICENSED PROFESSIONAL ENGINEER
LESLIE E. ROBERTSON
No. 34360
UNIVERSITY OF THE STATE OF NEW YORK

6-AB5-58

SKILLING - HELLE - CHRISTIANSEN - ROBERTSON — Structural & Civil Engineers

PROJECT THE WORLD TRADE CENTER | TITLE CONNECTION DETAIL 861A | DATE 7-14-67

REVISIONS
9-15-67

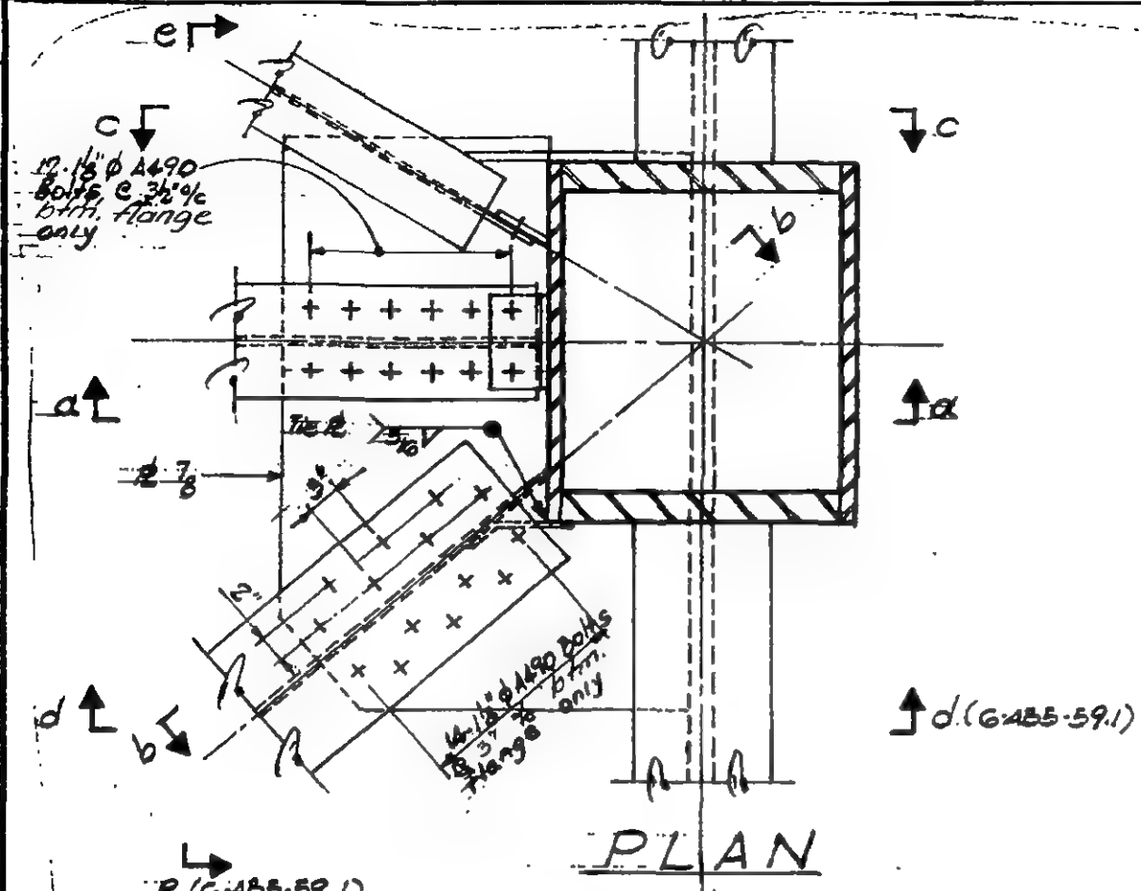

PLAN

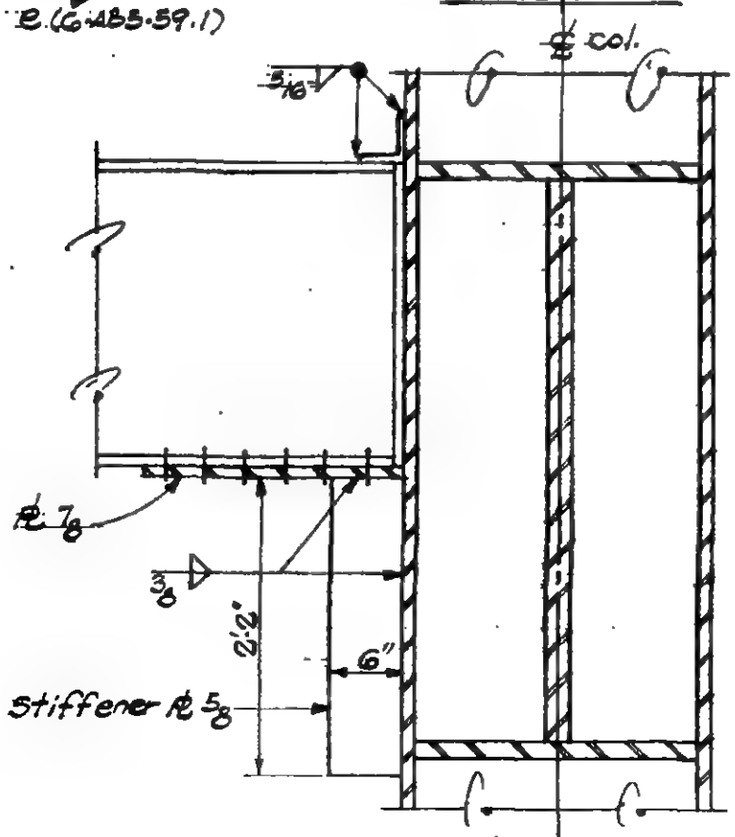

Section a-a

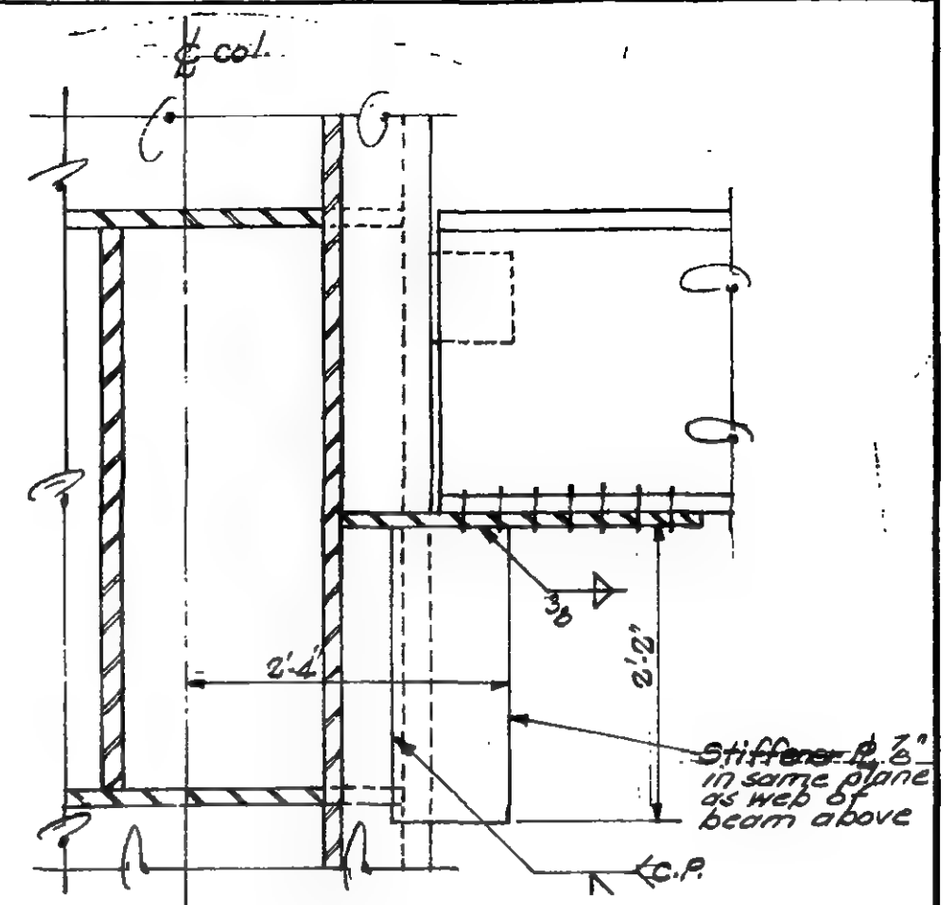

Section b-b

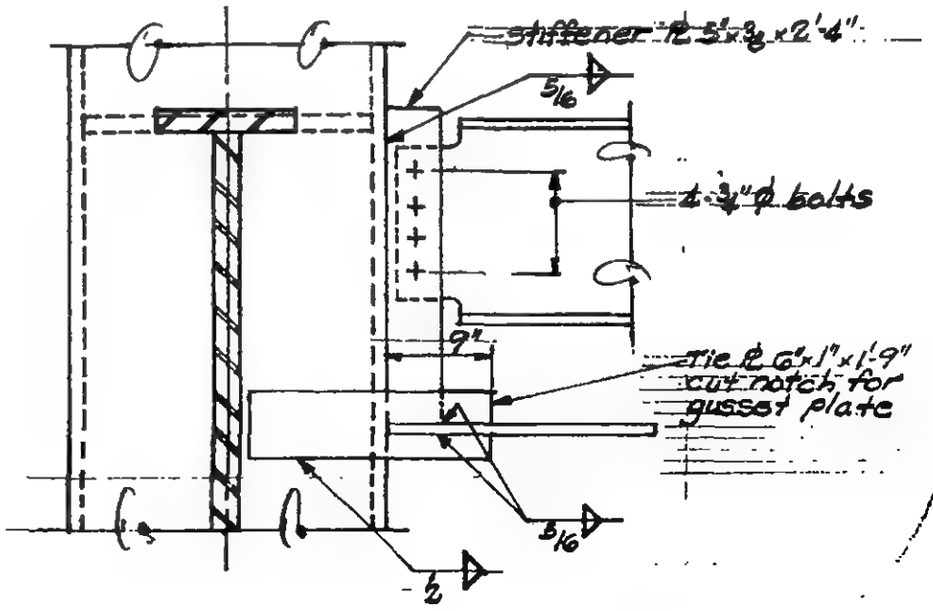

Section c-c

LICENSED PROFESSIONAL ENGINEER
LESLIE E. ROBERTSON
No. 34360
UNIVERSITY OF THE STATE OF NEW

6-ABS-59

SKILLING - HELLE - CHRISTIANSEN - ROBERTSON Structural & Civil Engineers

PROJECT THE WORLD TRADE CENTER | TITLE CONNECTION DETAIL 8GTA | DATE 9-15-67

REVISIONS

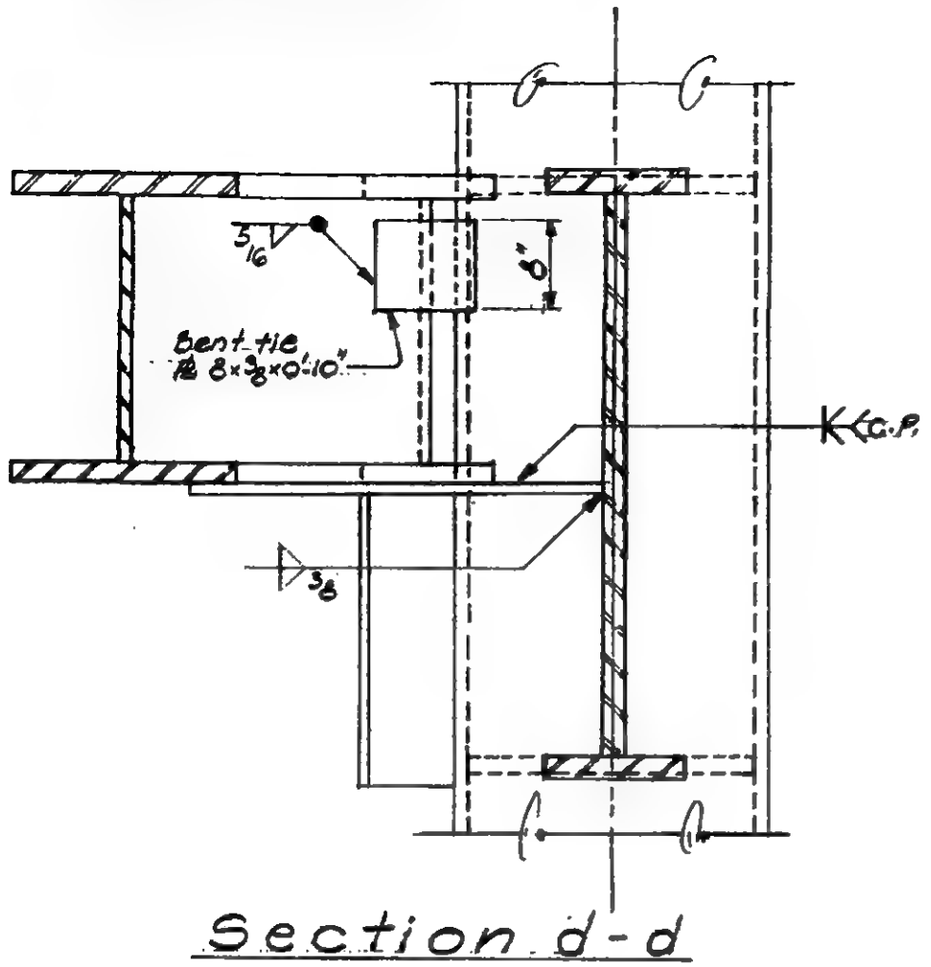

Section d-d

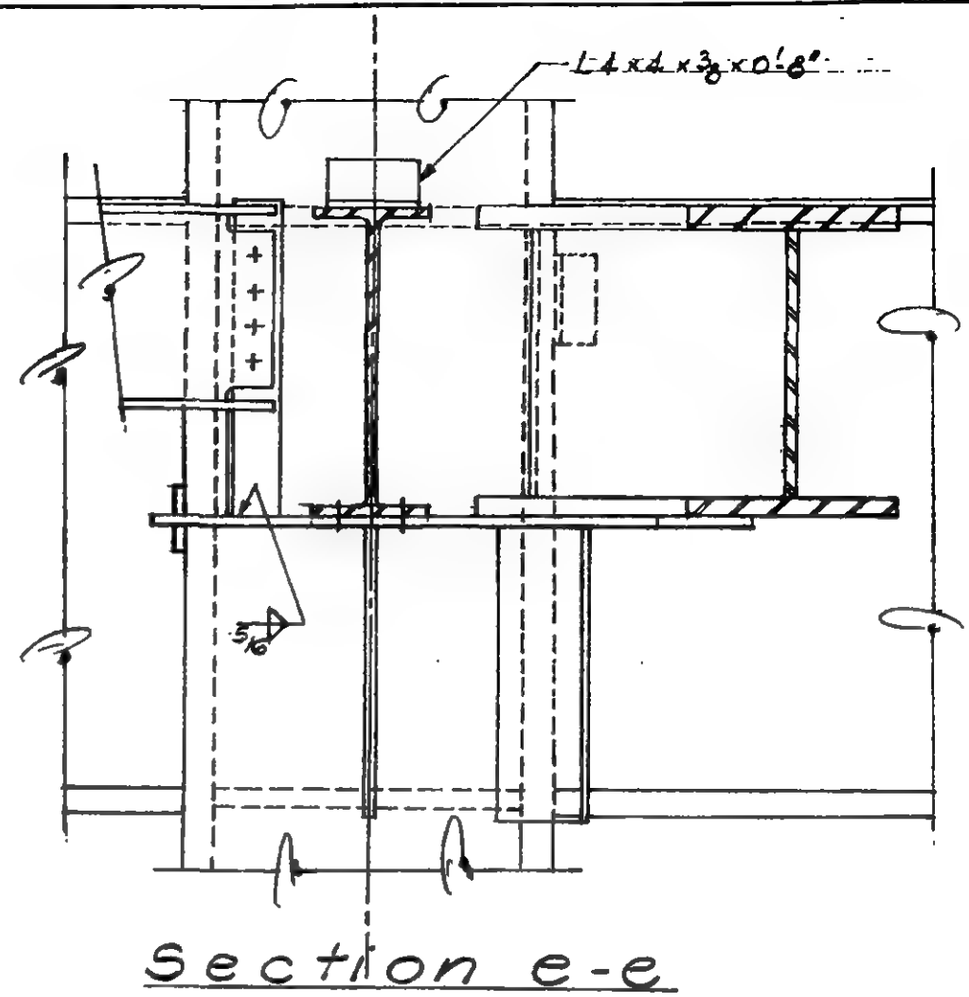

Section e-e

LICENSED PROFESSIONAL ENGINEER
LESLIE E. ROBERTSON
No. 34360
REGISTERED BY THE STATE OF NEW YORK

6-ABS-59.1

WORTHINGTON, SKILLING, HELLE & JACKSON Civil & Structural Engineers

PROJECT THE WORLD TRADE CENTER | TITLE CONNECTION DETAIL 862(A) | DATE 7-14-67

REVISIONS
9-29-67
10-31-67

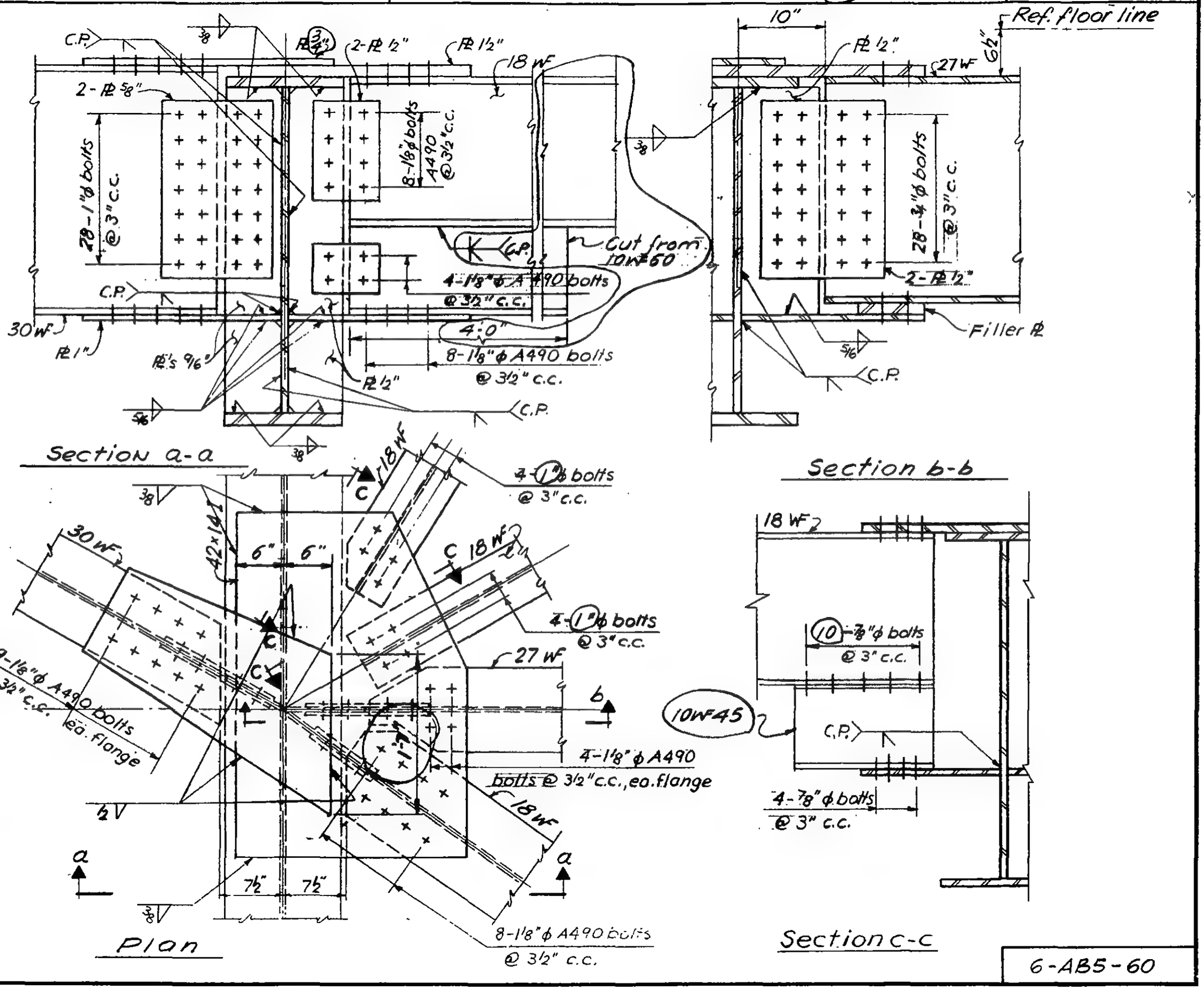

LICENSED PROFESSIONAL ENGINEER
LESLIE E. ROBERTSON
No. 34360
UNIVERSITY OF THE STATE OF NEW YORK

6-AB5-60

WORTHINGTON, SKILLING, HELLE & JACKSON — Civil & Structural Engineers

PROJECT THE WORLD TRADE CENTER | TITLE CONNECTION DETAIL 863 A | DATE 7-14-67

REVISIONS

9-29-67

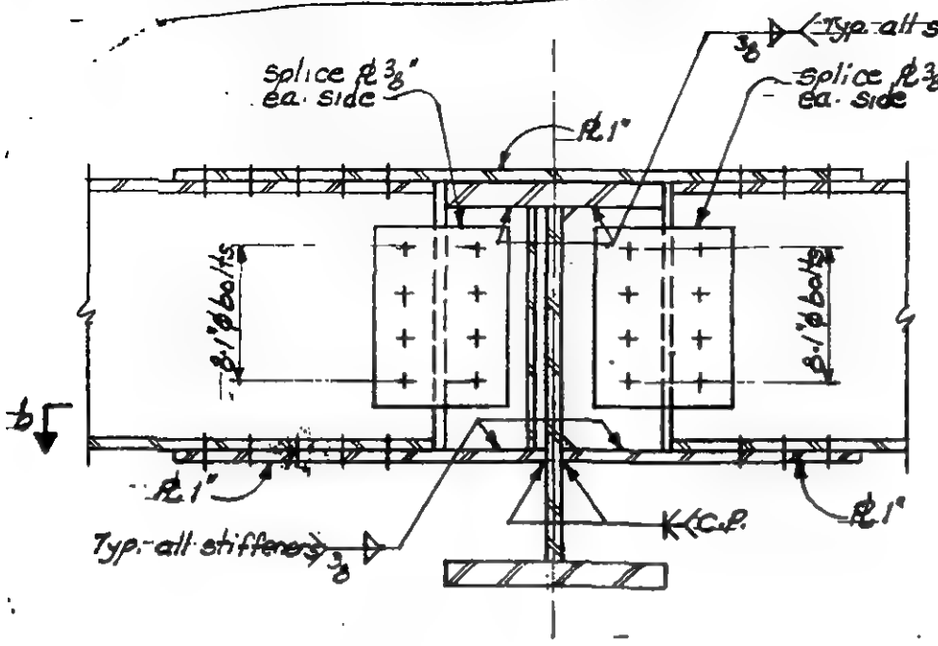

Section a-a

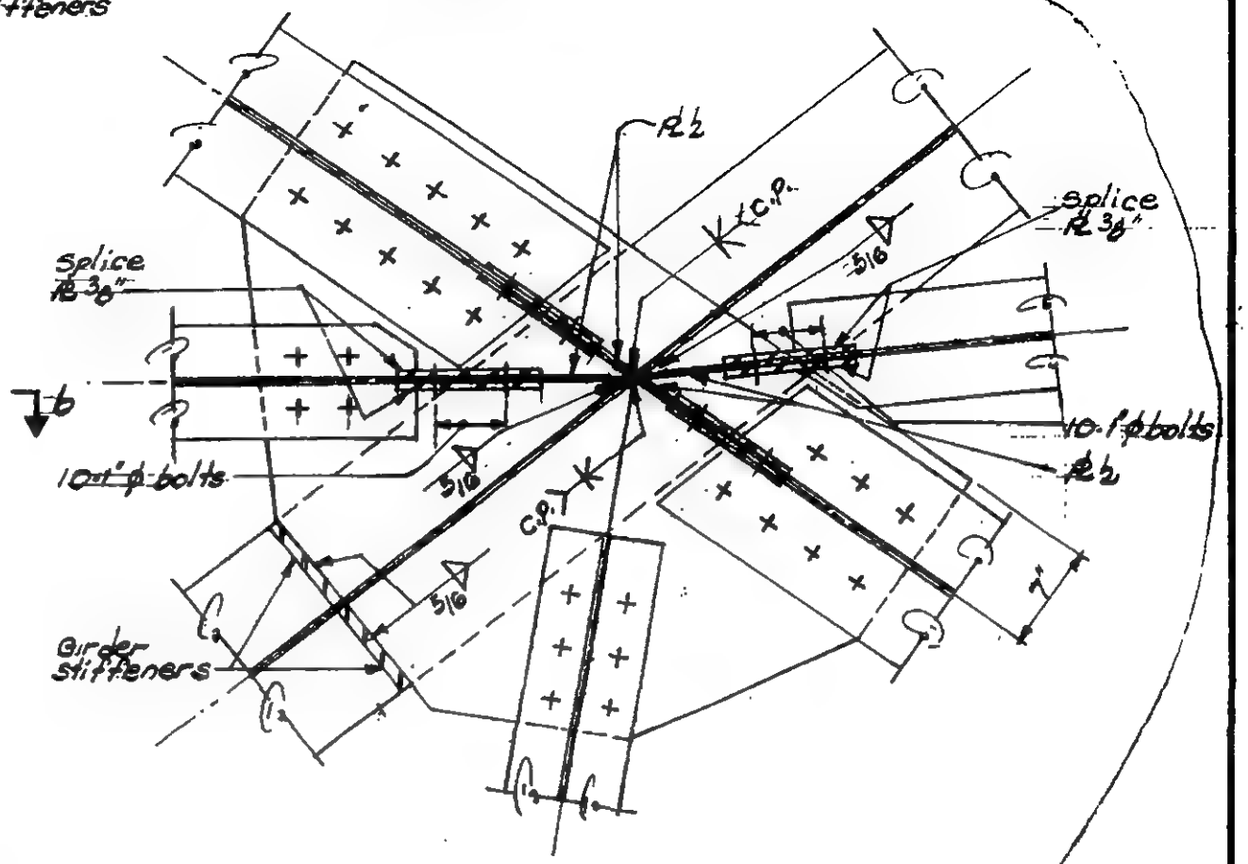

Section b-b

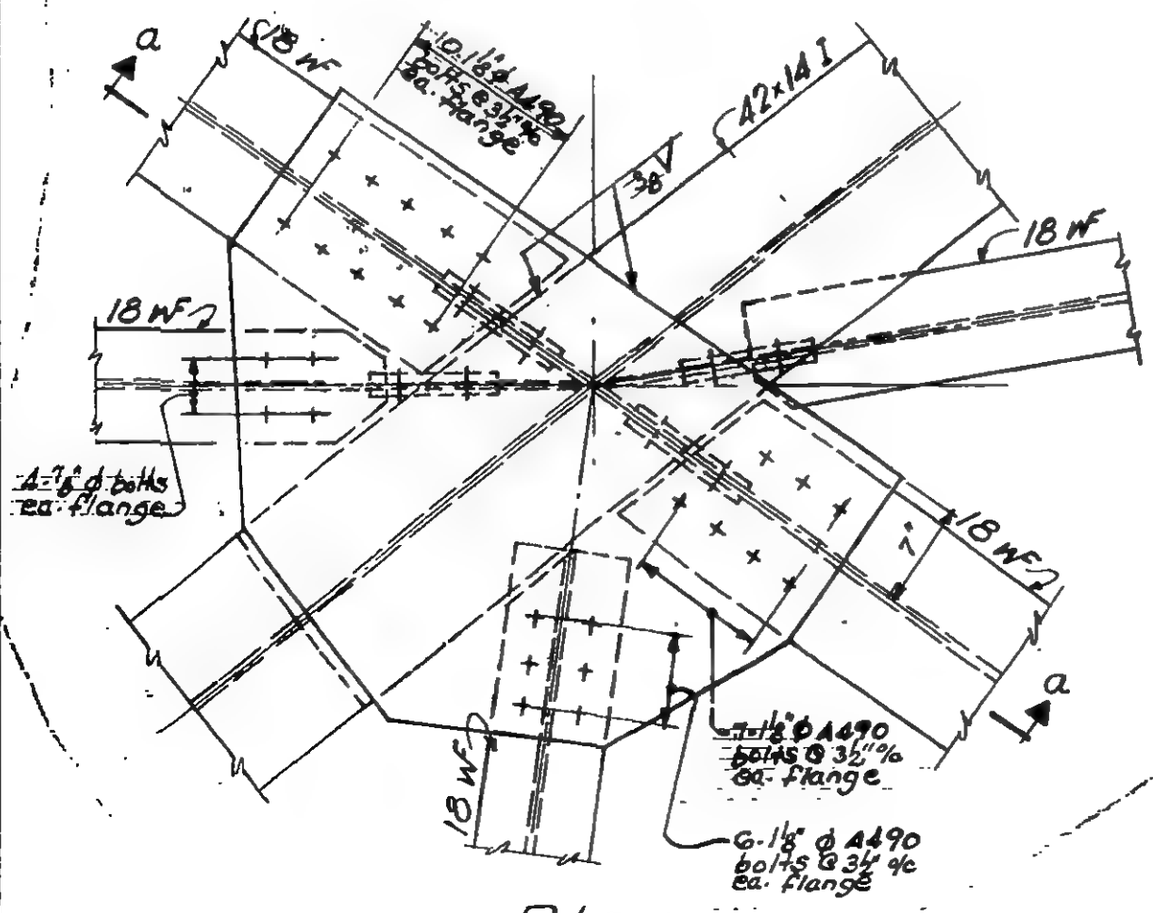

Plan

LICENSED PROFESSIONAL ENGINEER — LESLIE E. ROBERTSON — No. 34360 — STATE OF NEW YORK

6-AB5-61

SKILLING - HELLE - CHRISTIANSEN - ROBERTSON Structural & Civil Engineers

PROJECT THE WORLD TRADE CENTER | TITLE CONNECTION DETAIL BG4A | DATE 9-29-67

REVISIONS

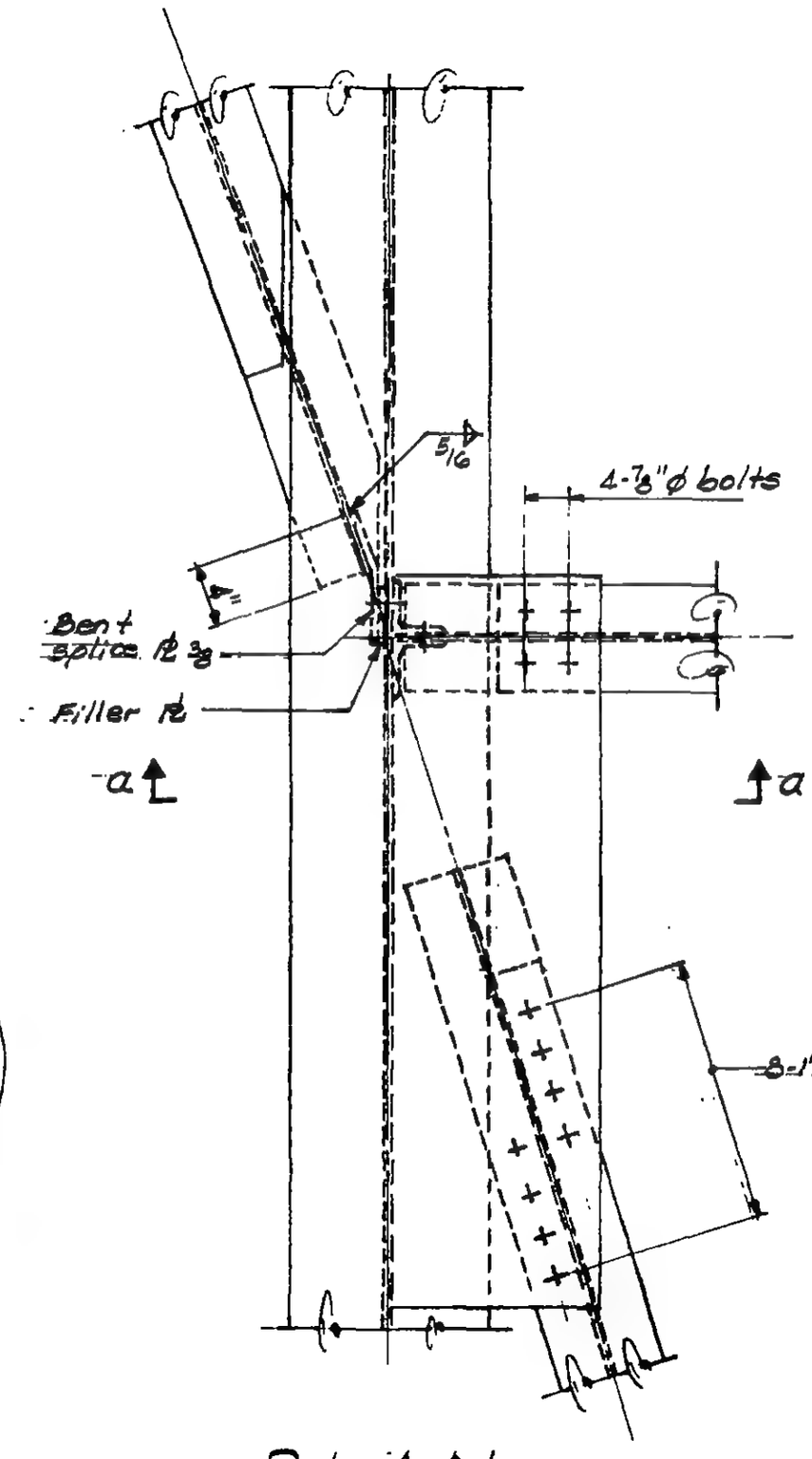

PLAN

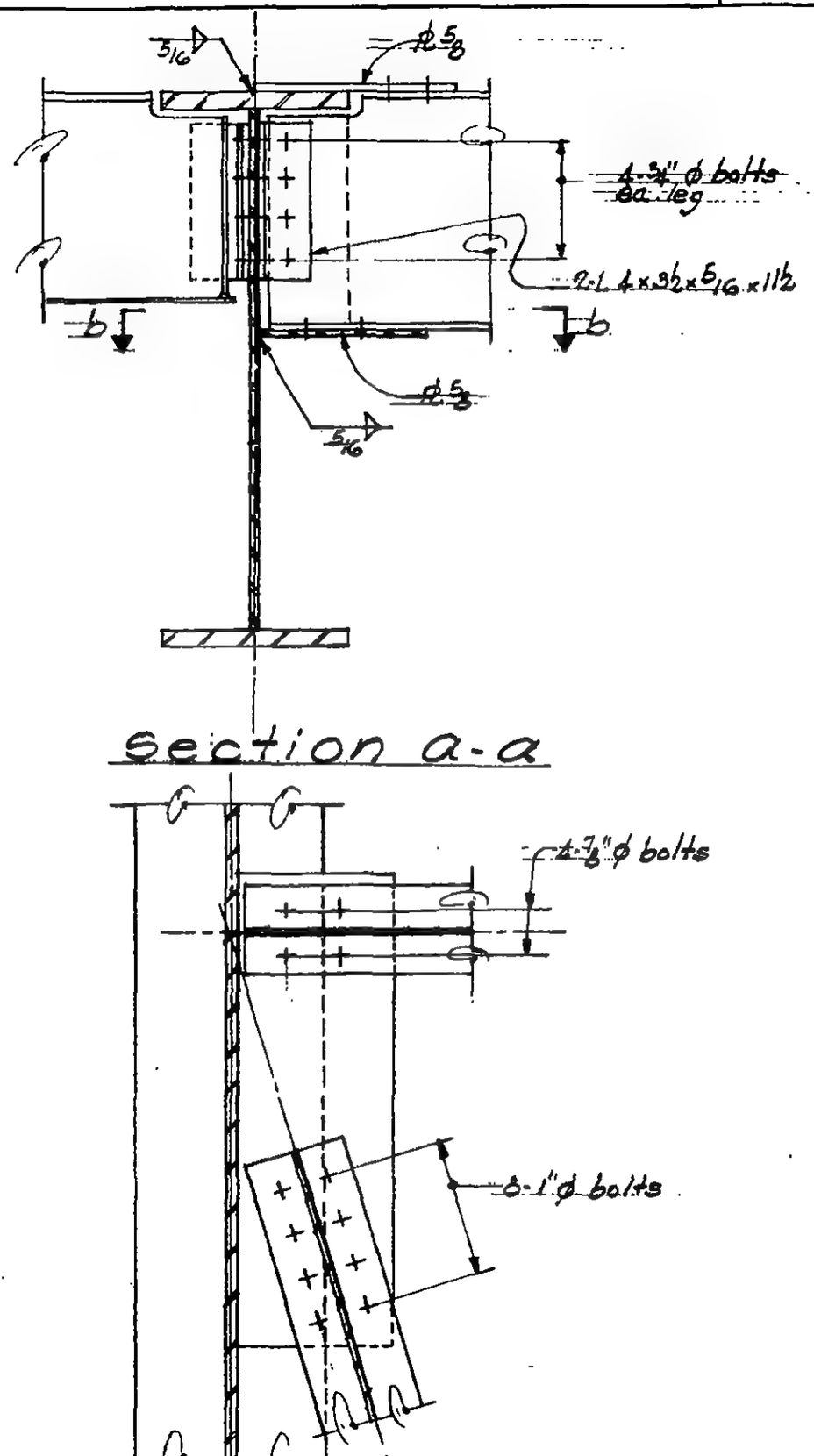

Section a-a

Section b-b

LICENSED PROFESSIONAL ENGINEER
LESLIE E. ROBERTSON
No. 34360
UNIVERSITY OF THE STATE OF NEW YORK

G-AB5-62

WORTHINGTON, SKILLING, HELLE & JACKSON — Civil & Structural Engineers

PROJECT: THE WORLD TRADE CENTER | TITLE: CONNECTION DETAIL 865A | DATE: 7-14-67

REVISIONS
9-29-67
10-31-67

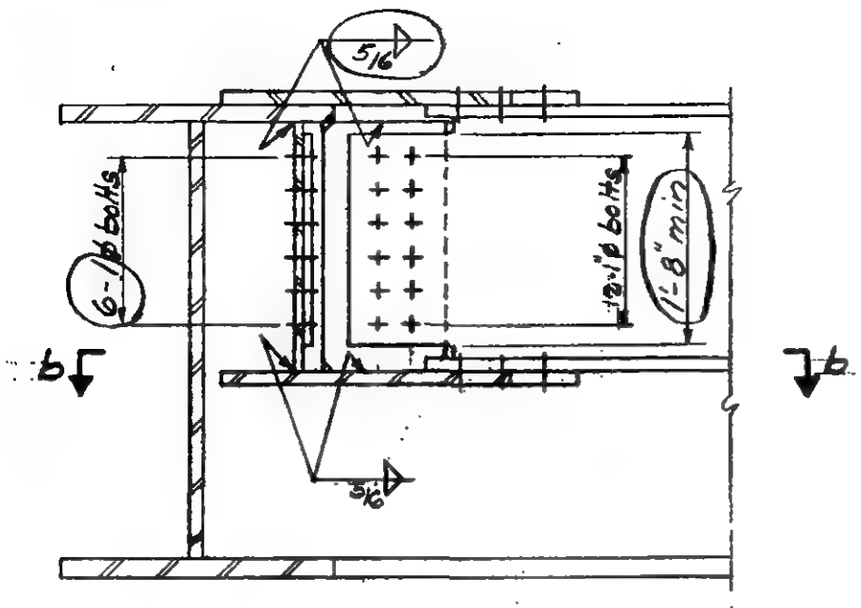

Section a-a

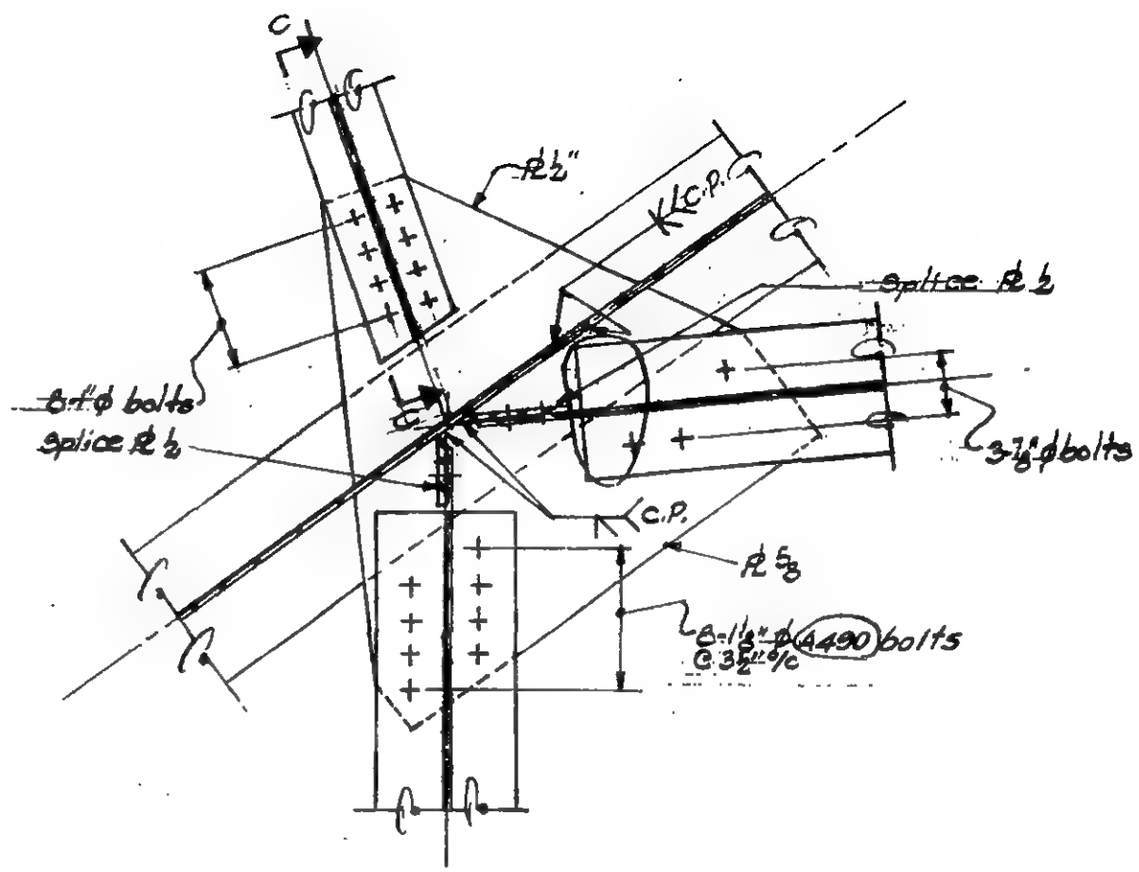

Section b-b

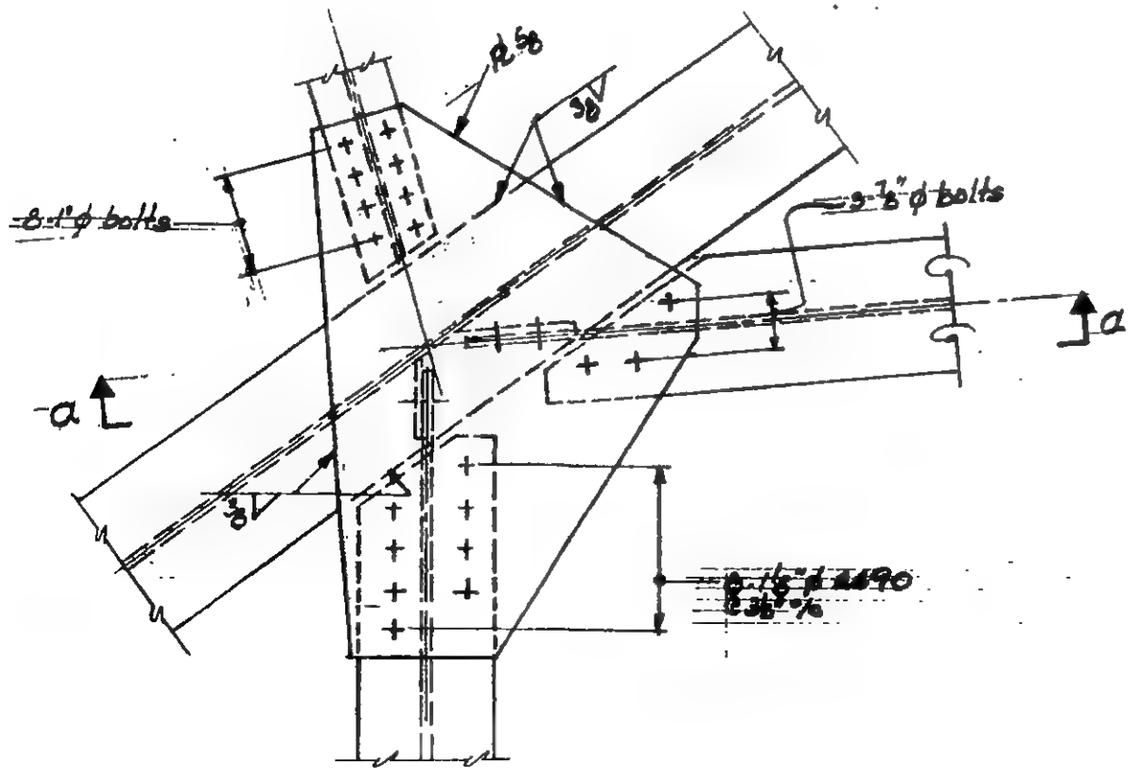

Plan

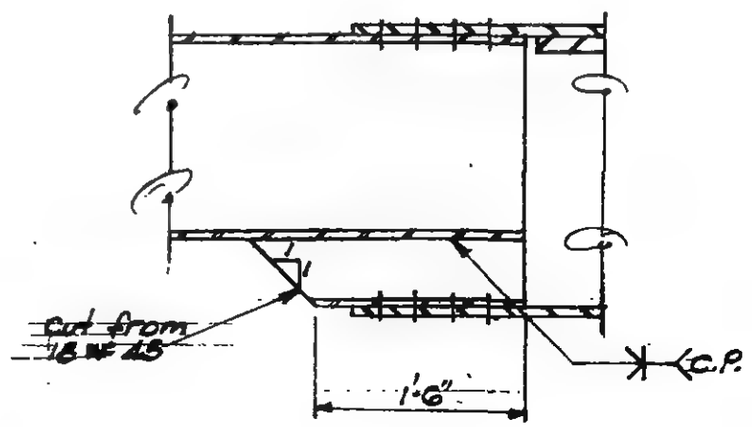

Section c-c

6-AB5-63

LICENSED PROFESSIONAL ENGINEER
LESLIE E. ROBERTSON
No. 24360
UNIVERSITY OF THE STATE OF NEW YORK

SKILLING - HELLE - CHRISTIANSEN - ROBERTSON Structural & Civil Engineers

PROJECT THE WORLD TRADE CENTER | TITLE CONNECTION DETAIL 866A | DATE 9-29-67

REVISIONS

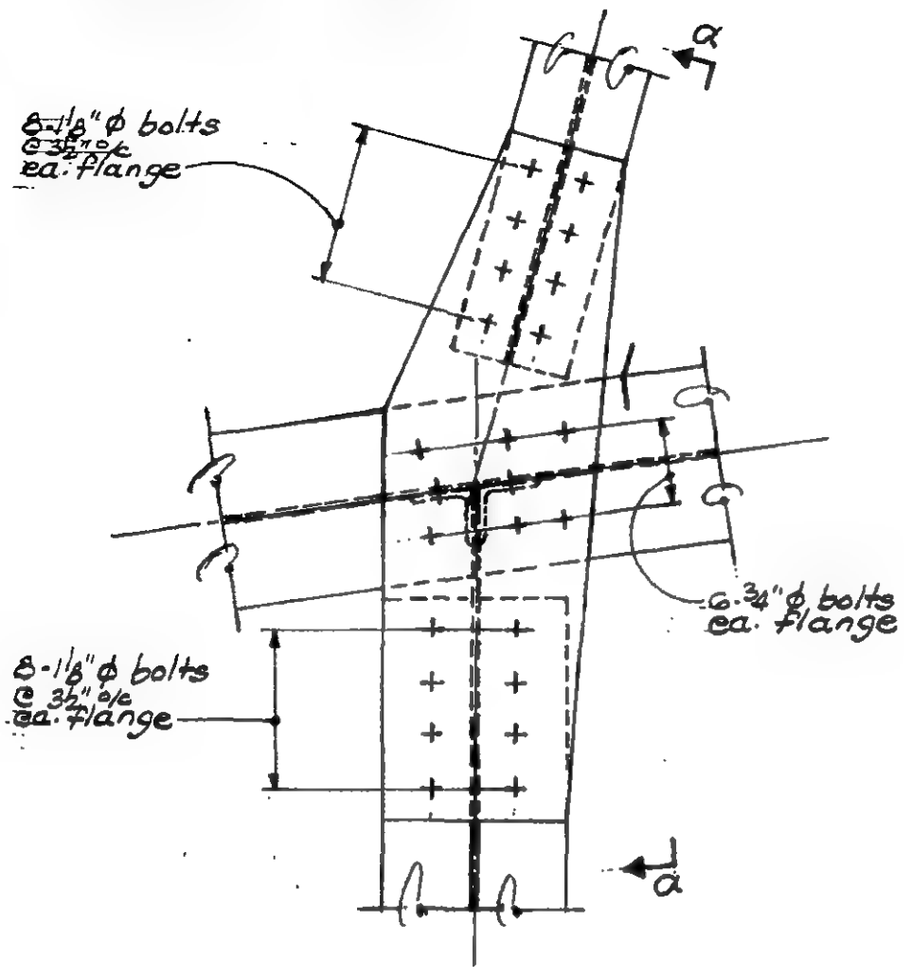

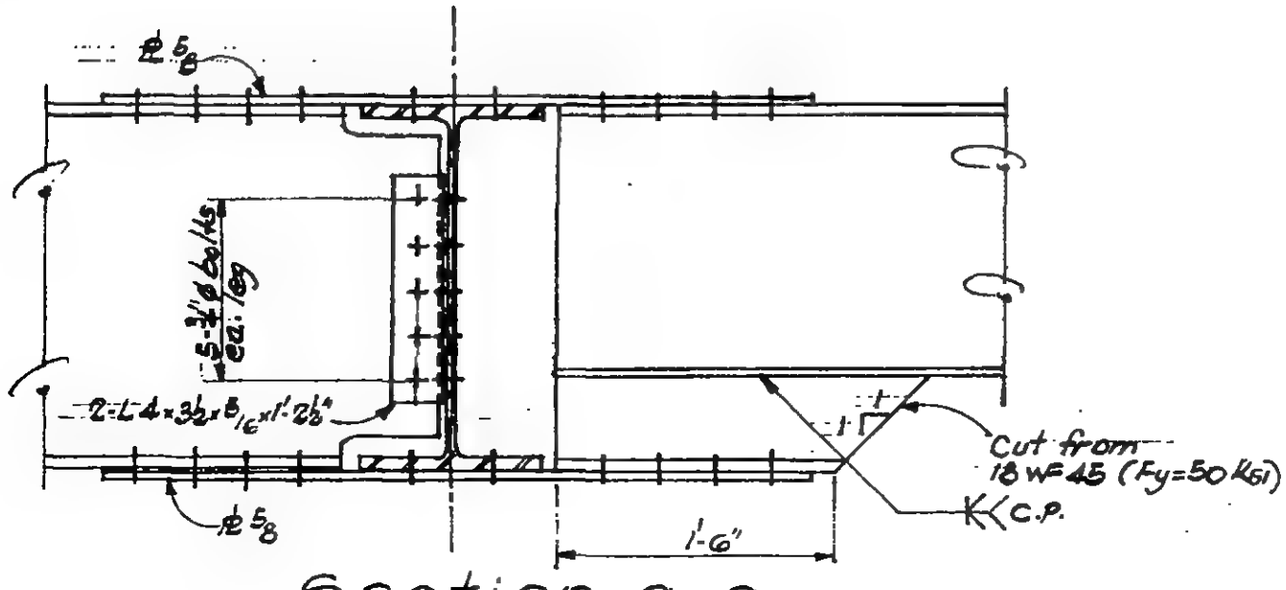

Section a-a

LICENSED PROFESSIONAL ENGINEER LESLIE E. ROBERTSON No. 34360 UNIVERSITY OF THE STATE OF NEW YORK

6-AB5-64

SKILLING - HELLE - CHRISTIANSEN - ROBERTSON — Structural & Civil Engineers

PROJECT THE WORLD TRADE CENTER | TITLE CONNECTION DETAIL 867A | DATE 9-15-67

REVISIONS

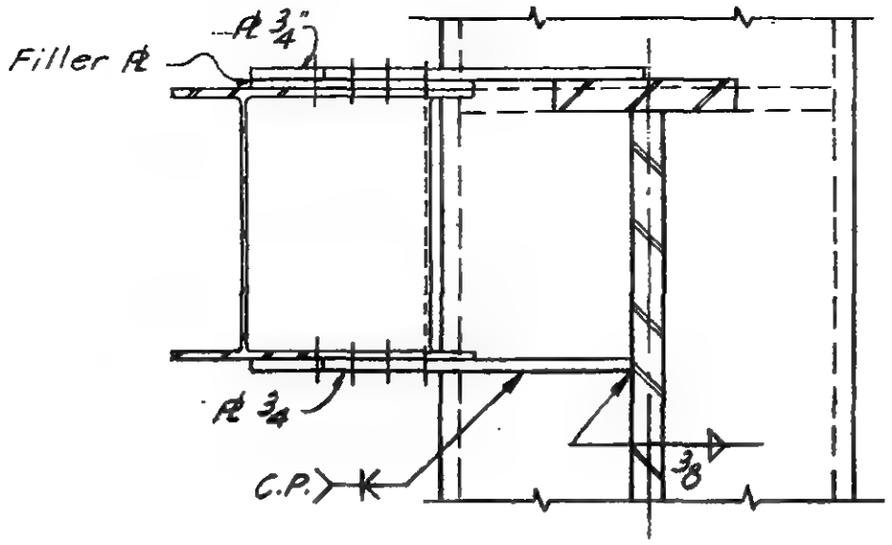

Section a-a

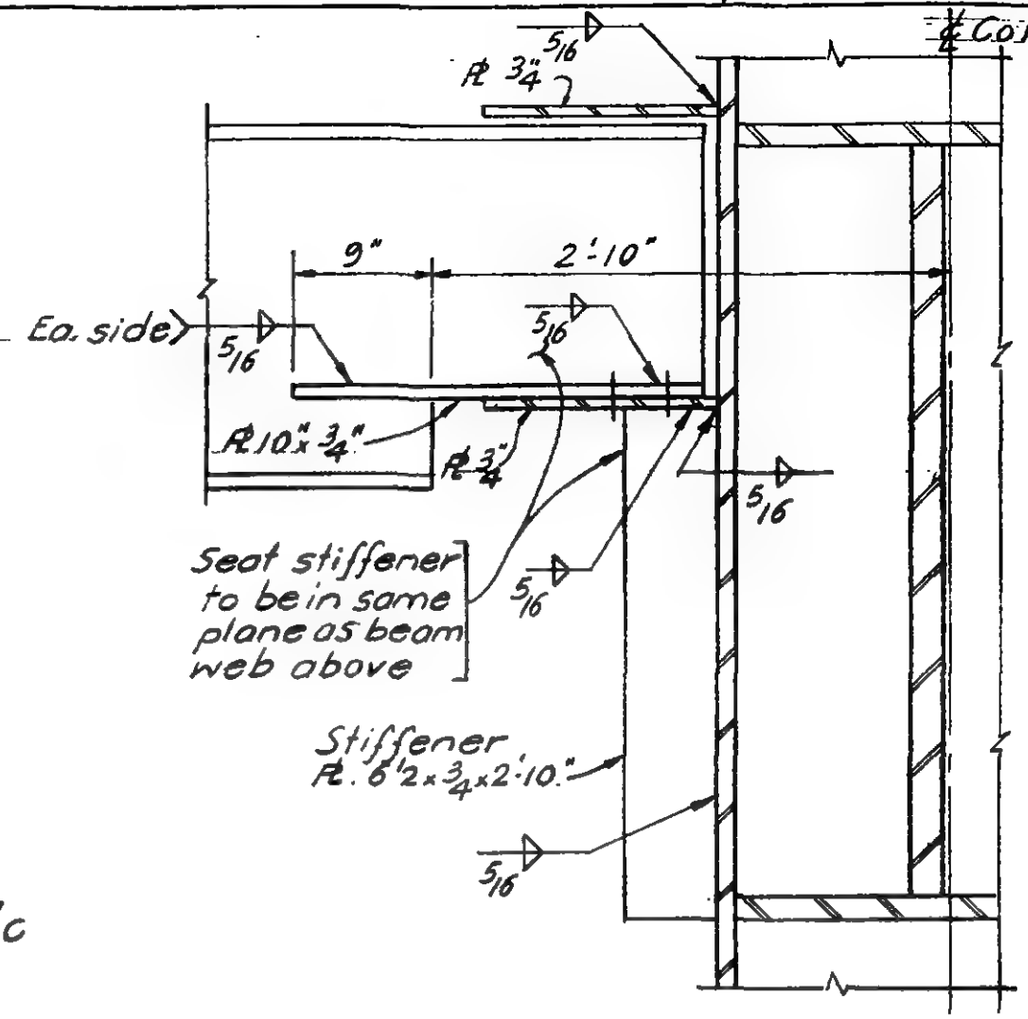

Section b-b

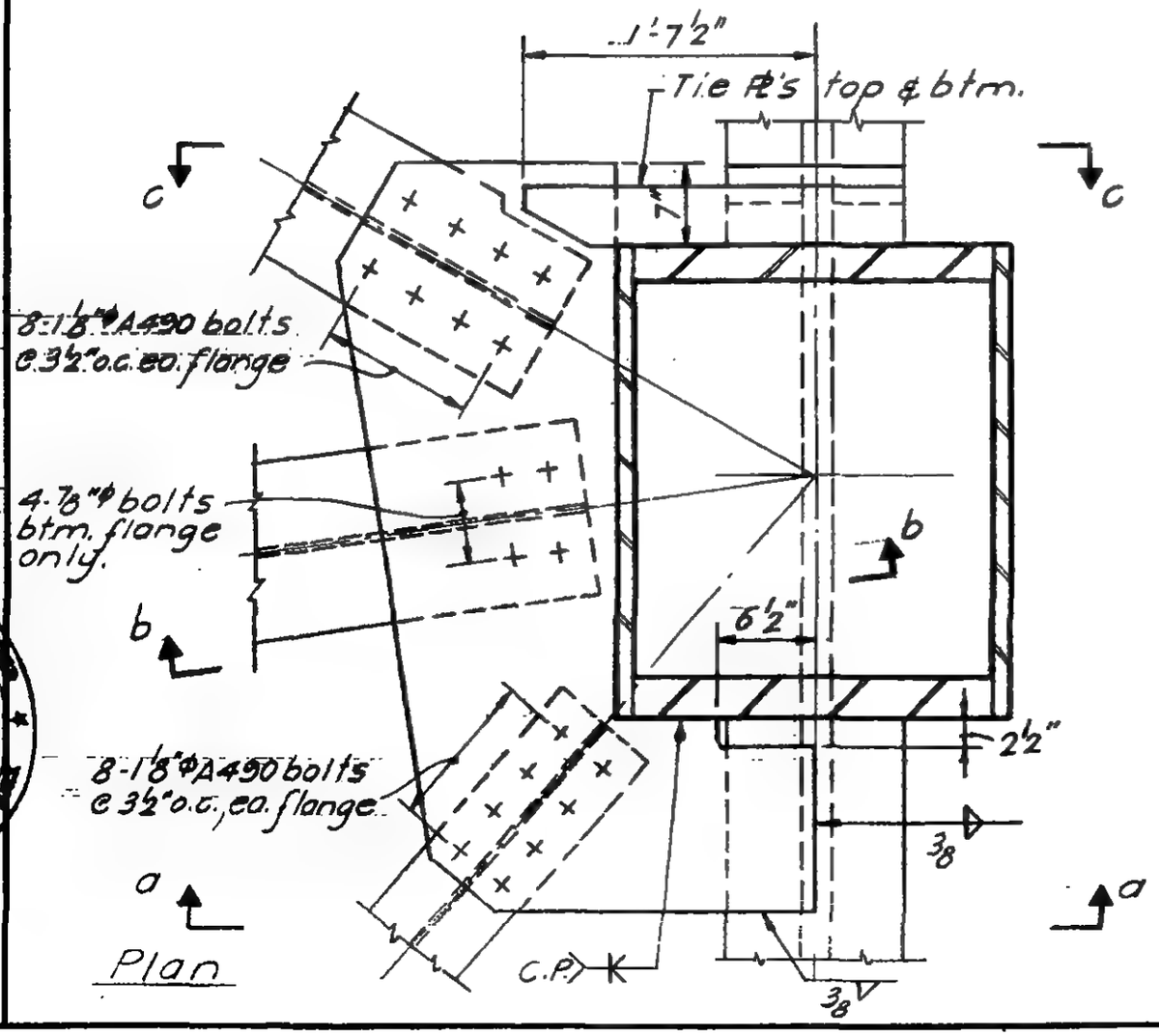

Plan

LICENSED PROFESSIONAL ENGINEER
LESLIE E. ROBERTSON
No. 34369
STATE OF NEW YORK

6-AB5-65

SKILLING - HELLE - CHRISTIANSEN - ROBERTSON — Structural & Civil Engineers

PROJECT THE WORLD TRADE CENTER | TITLE CONNECTION DETAIL 867A | DATE 9-15-67

REVISIONS

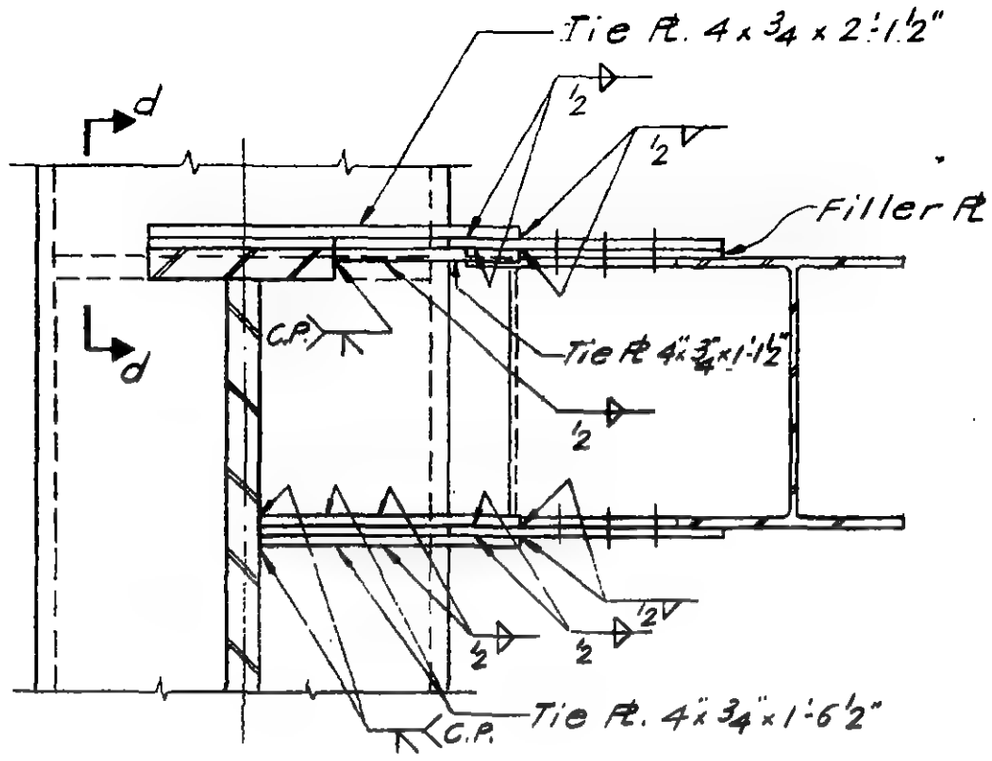

Section c-c

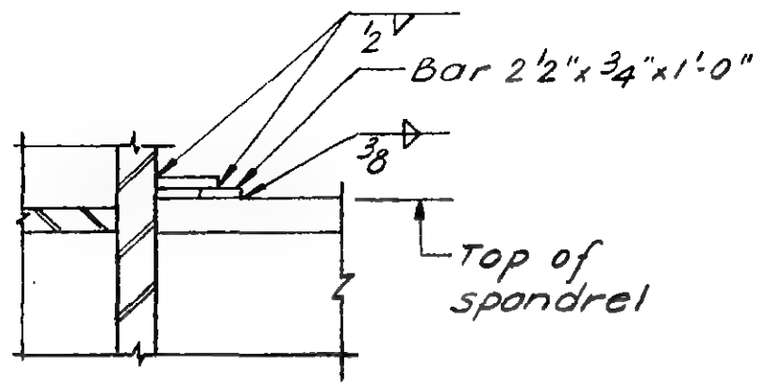

Section d-d

LICENSED PROFESSIONAL ENGINEER
LESLIE E. ROBERTSON
No. 34360
UNIVERSITY OF THE STATE OF NEW YORK

6-AB5-65.1

WORTHINGTON, SKILLING, HELLE & JACKSON Civil & Structural Engineers

PROJECT THE WORLD TRADE CENTER | TITLE CONNECTION DETAIL 868 A | DATE 7-14-67

REVISIONS

9-29-67

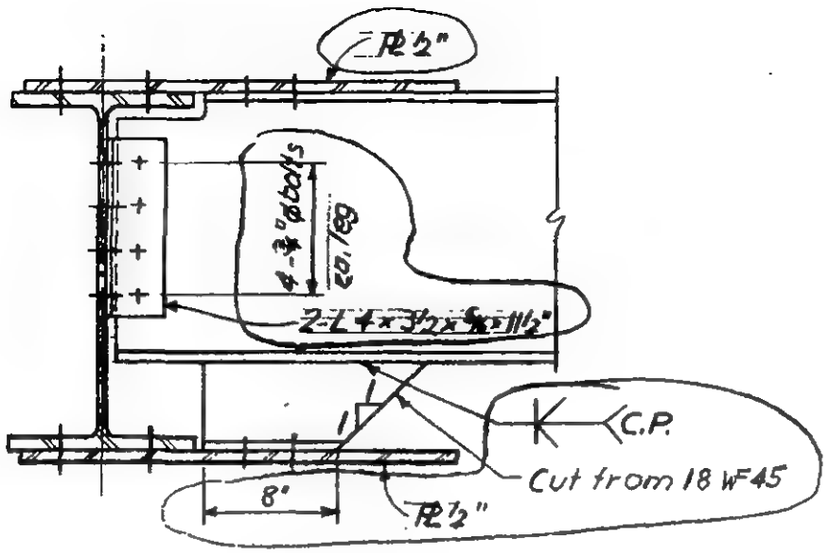

Section a-a

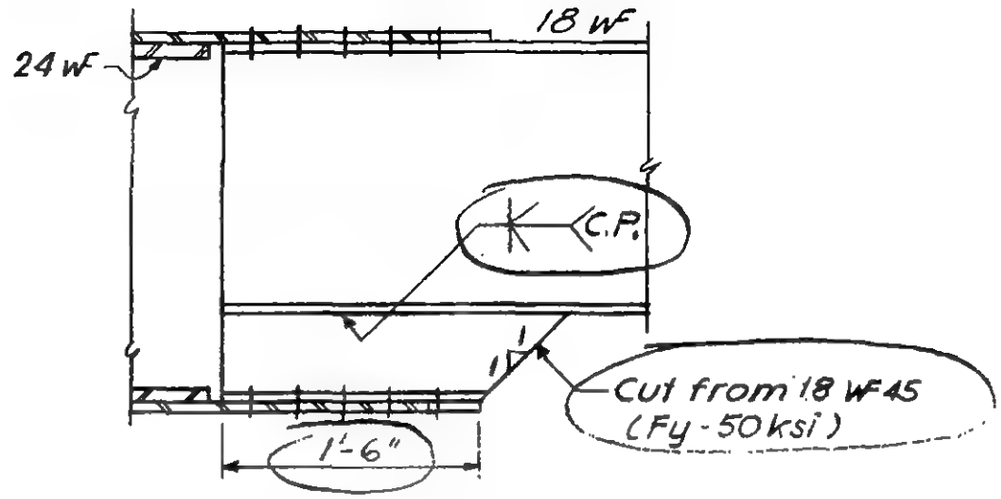

Section b-b

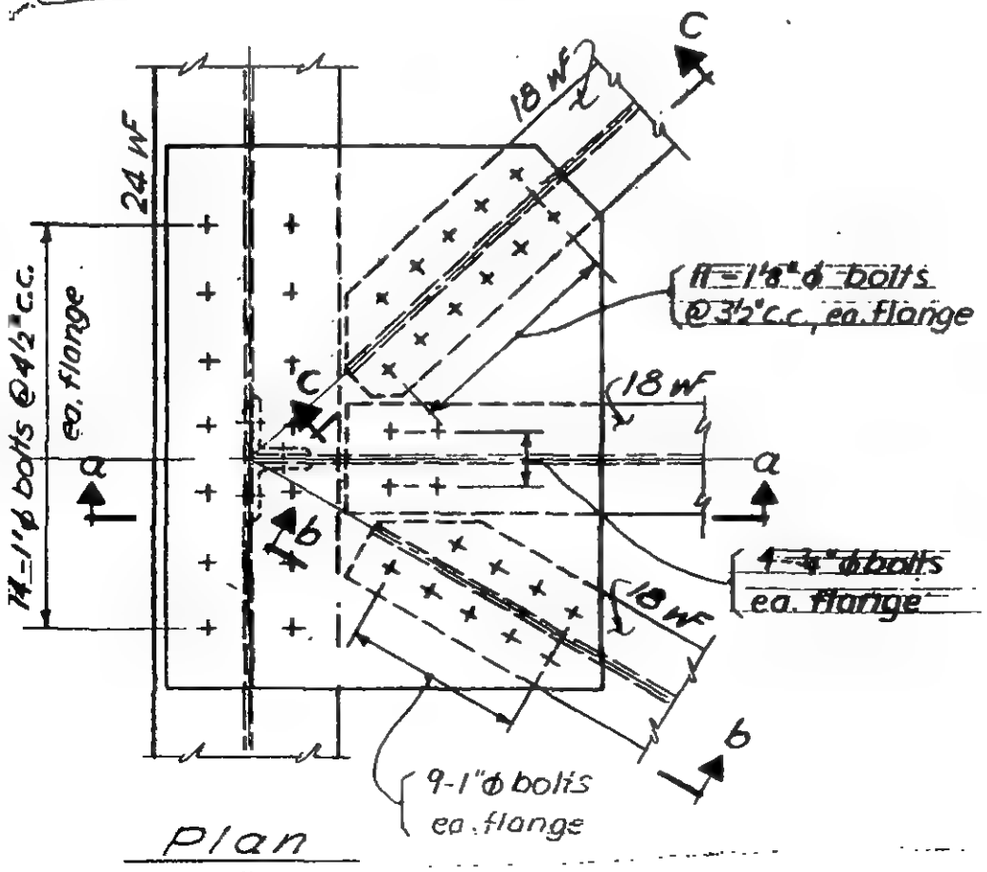

Plan

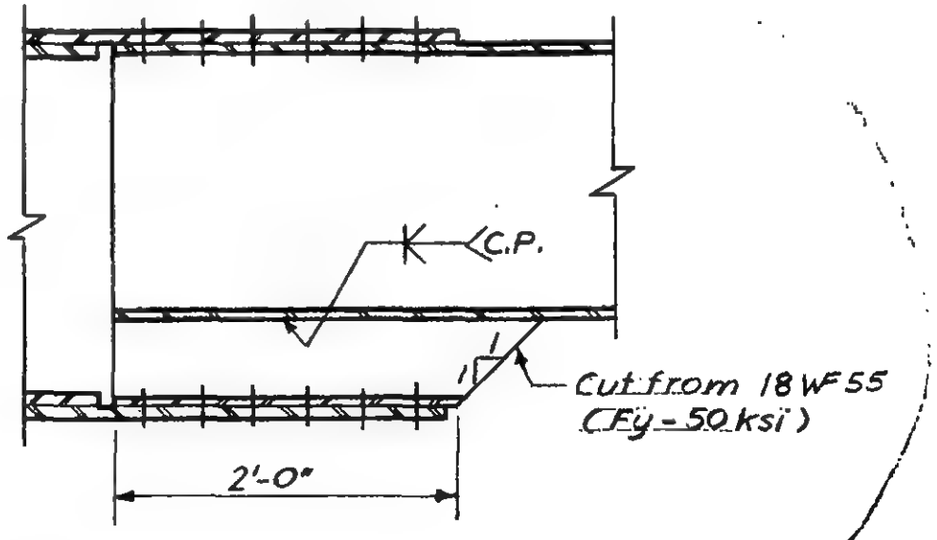

Section c-c

LICENSED PROFESSIONAL ENGINEER
LESLIE E. ROBERTSON
No. 34360
UNIVERSITY OF THE STATE OF NEW YORK

6-AB5-66

WORTHINGTON, SKILLING, HELLE & JACKSON Civil & Structural Engineers

PROJECT THE WORLD TRADE CENTER | TITLE CONNECTION DETAIL 869 A | DATE 7-14-67

REVISIONS

9-29-67

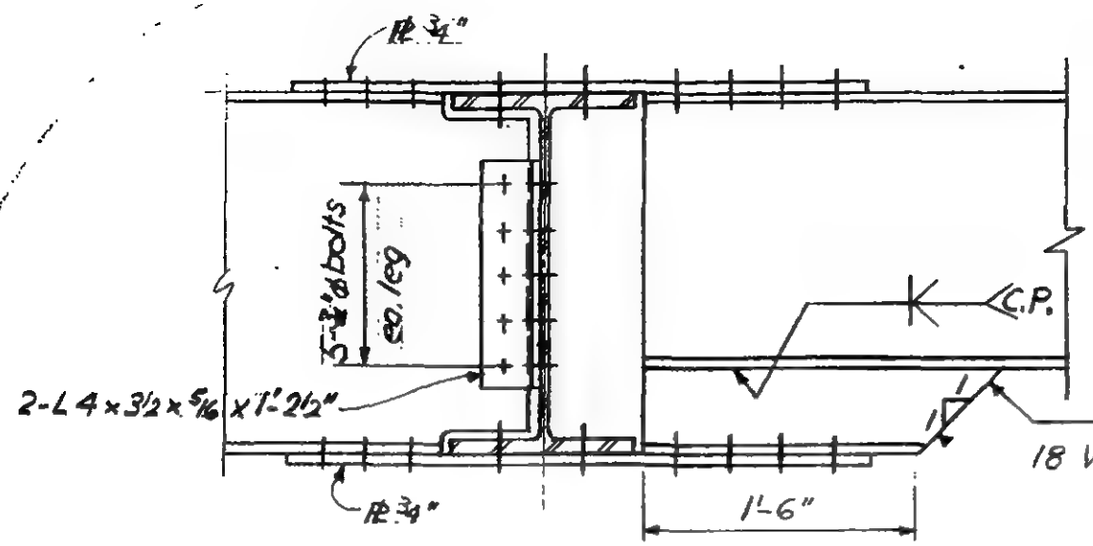

Section a-a

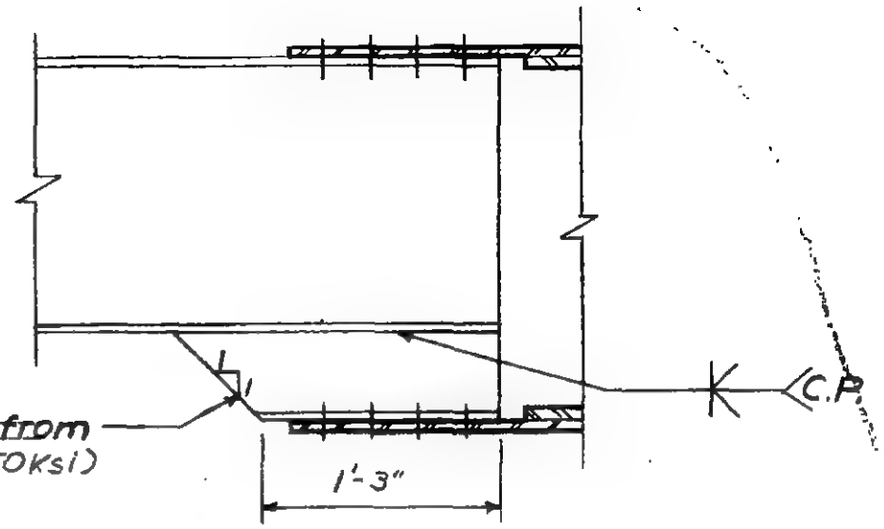

Section b-b

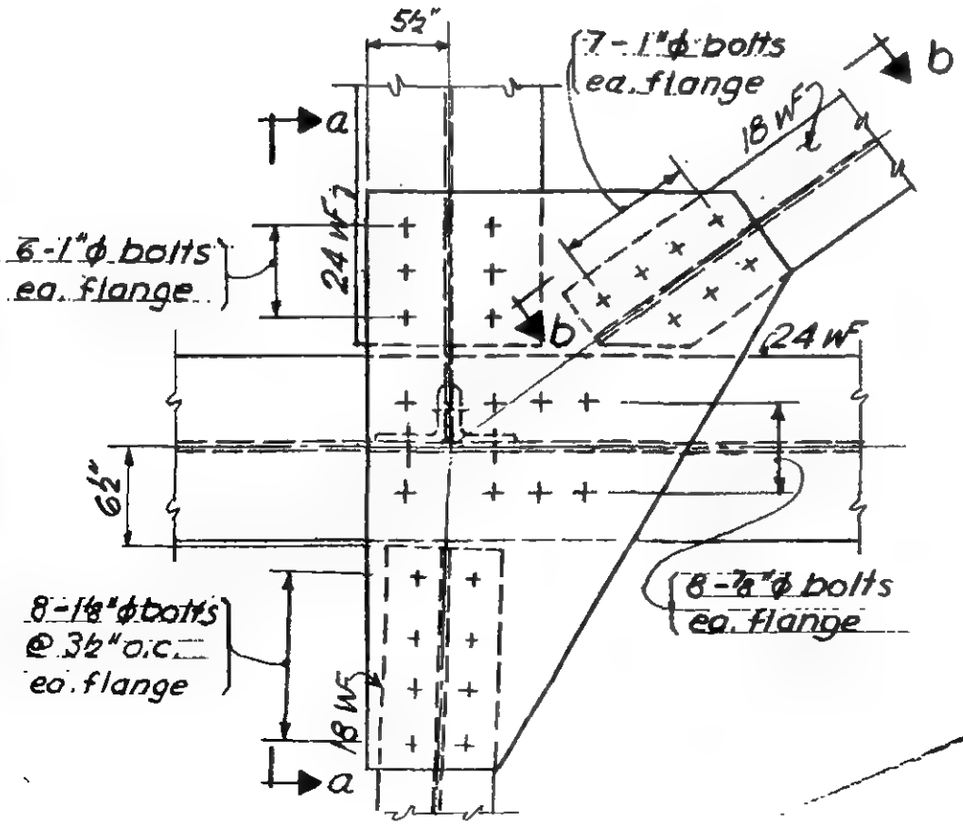

Plan

LICENSED PROFESSIONAL ENGINEER
LESLIE E. ROBERTSON
No. 34360
UNIVERSITY OF THE STATE OF NEW YORK

6-AB5-67

WORTHINGTON, SKILLING, HELLE & JACKSON — Civil & Structural Engineers

PROJECT THE WORLD TRADE CENTER | TITLE CONNECTION DETAIL 870A | DATE 7-14-67

REVISIONS

9-15-67

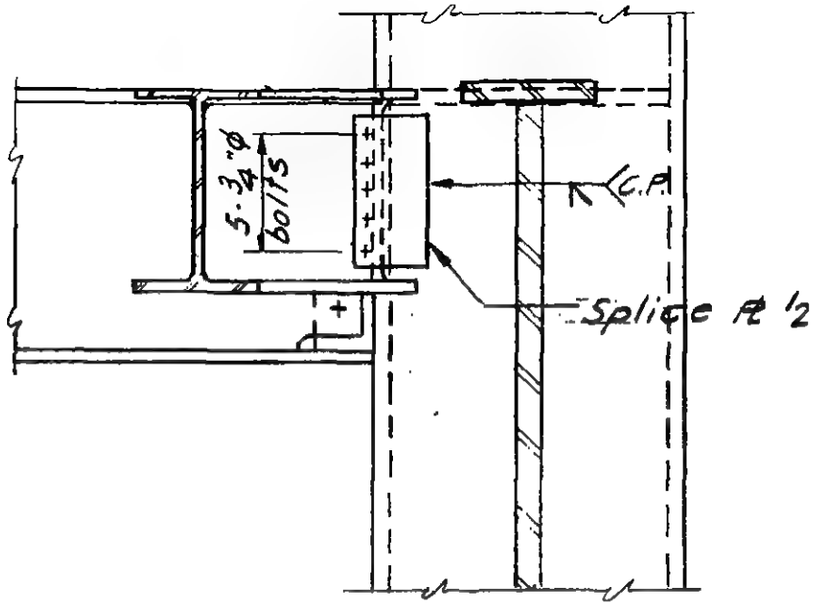

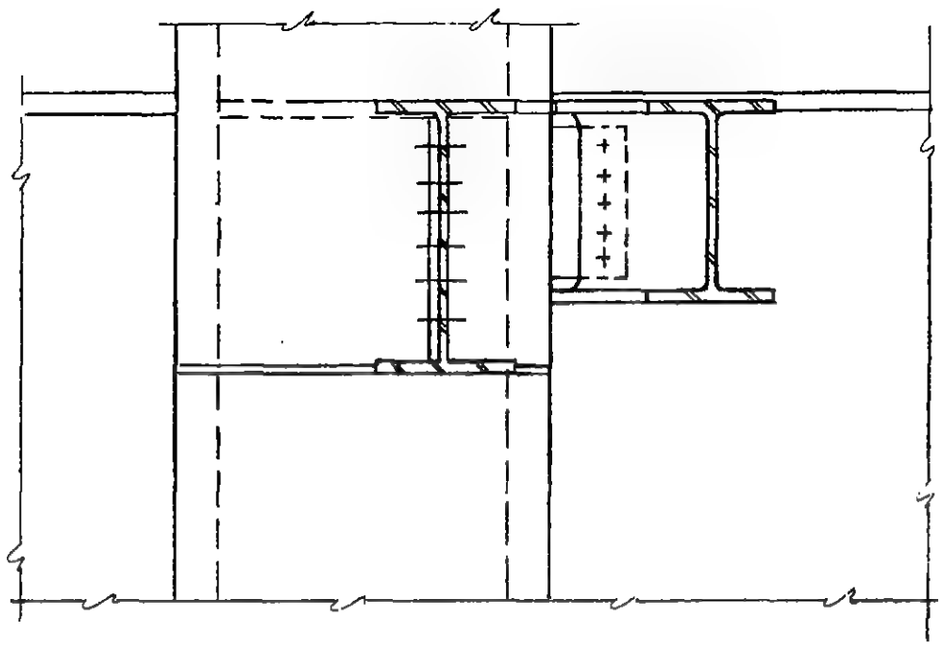

Section a-a

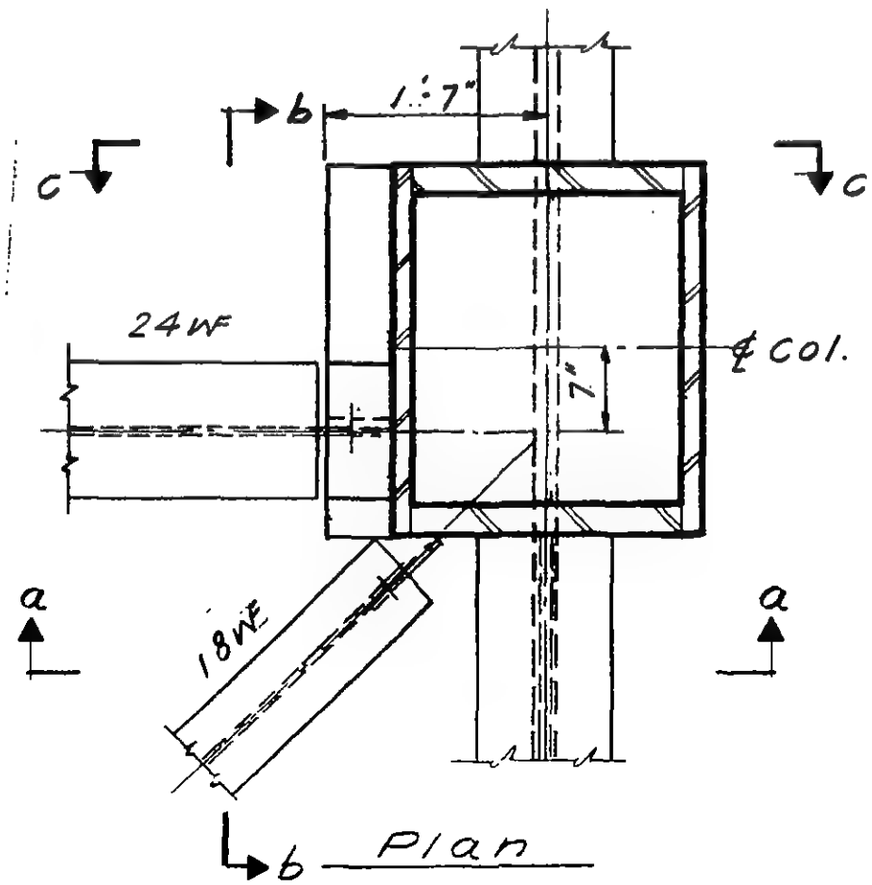

Plan

Section b-b

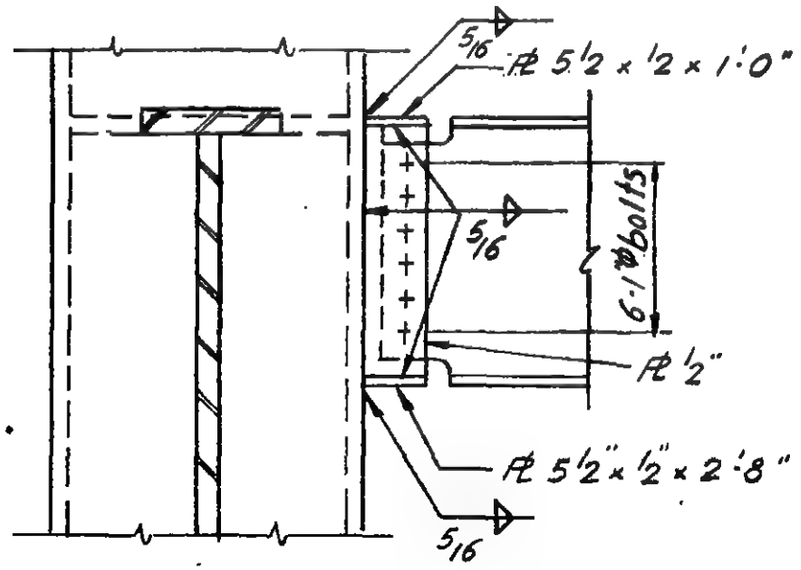

Section c-c

LICENSED PROFESSIONAL ENGINEER
LESLIE E. ROBERTSON
No. 34360
UNIVERSITY OF THE STATE OF NEW YORK

6-AR5-6°

WORTHINGTON, SKILLING, HELLE & JACKSON — Civil & Structural Engineers

PROJECT THE WORLD TRADE CENTER | TITLE CONNECTION DETAIL 871 A | DATE 7-14-67

EVISIONS

9-29-67

10-4-67

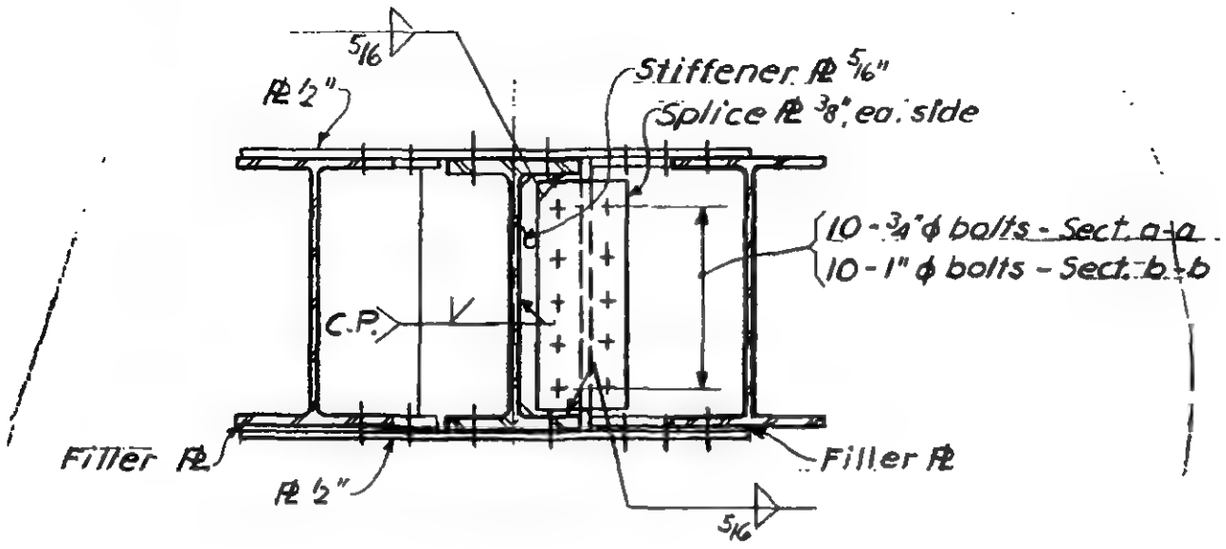

Section a-a

Section b-b, opp. hand

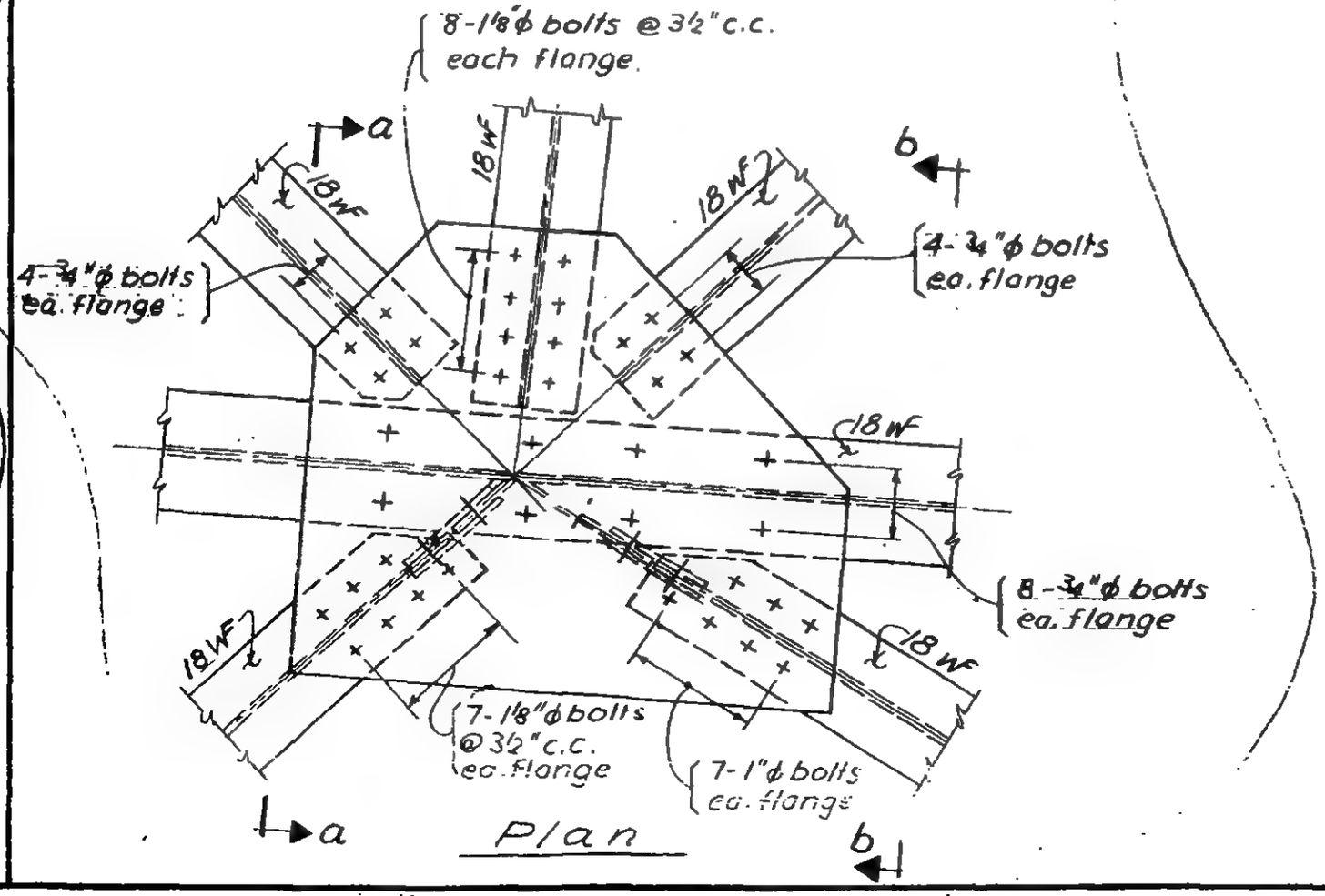

Plan

REGISTERED PROFESSIONAL ENGINEER
LESLIE E. ROBERTSON
No. 34360
UNIVERSITY OF THE STATE OF NEW YORK

6-AB5-69

SKILLING - HELLE - CHRISTIANSEN - ROBERTSON Structural & Civil Engineers

PROJECT THE WORLD TRADE CENTER | TITLE CONNECTION DETAIL 872A | DATE 9-15-67

REVISIONS

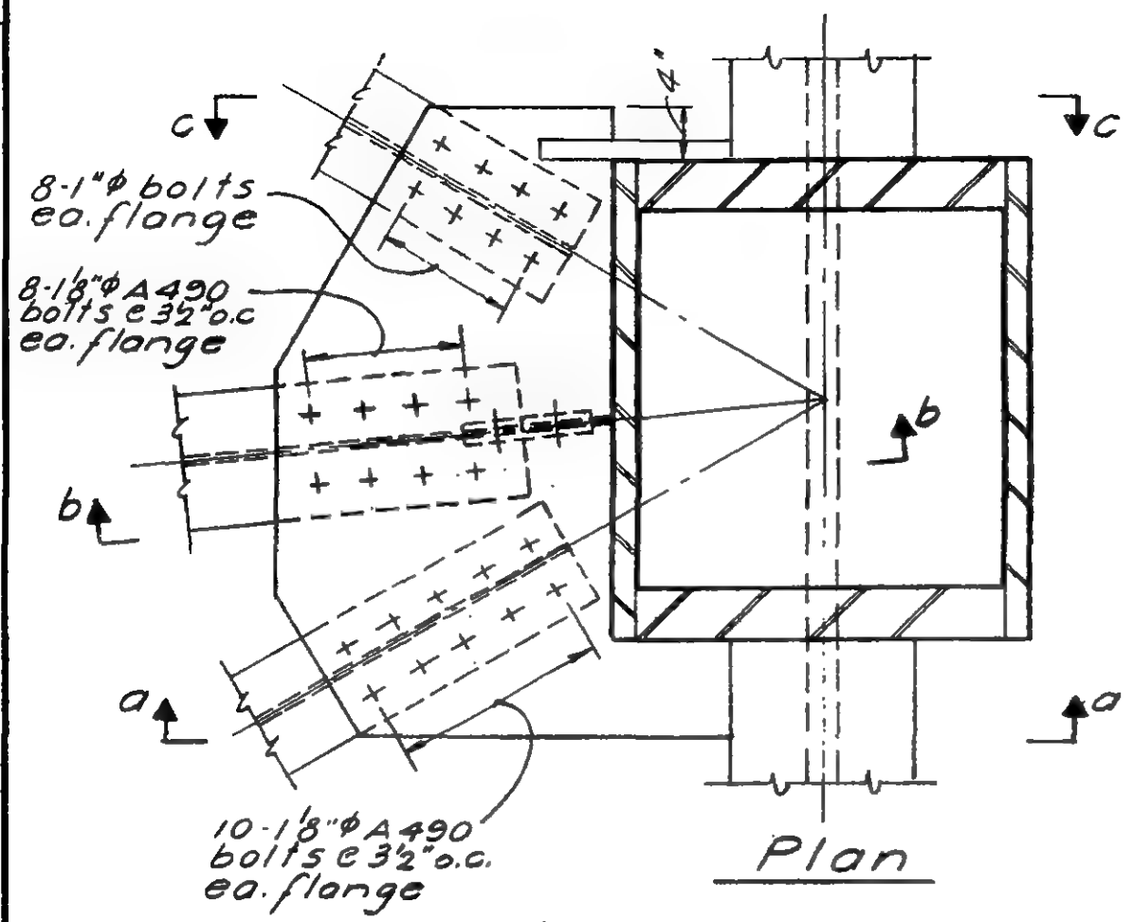

Plan

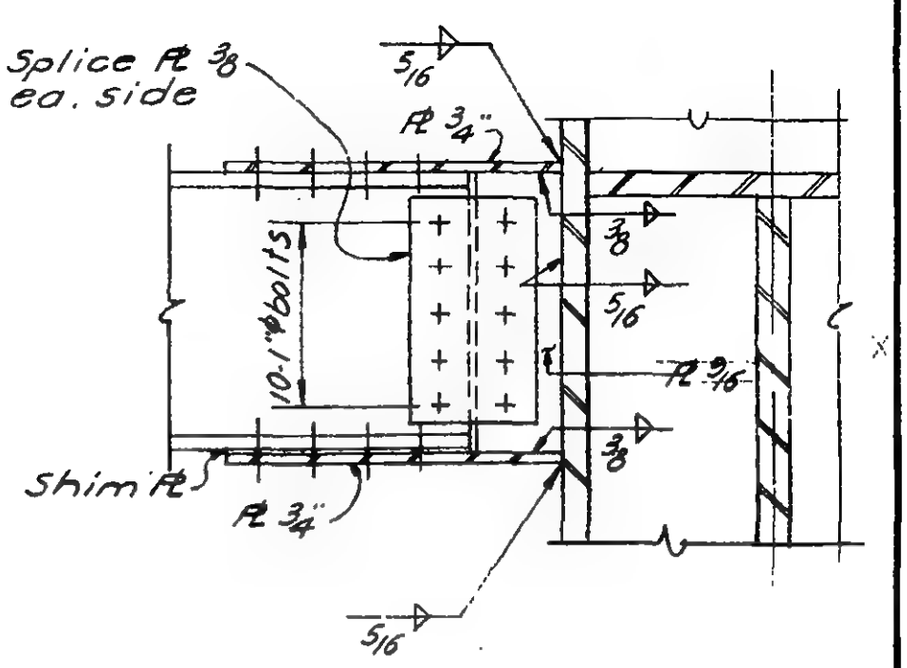

Section b-b

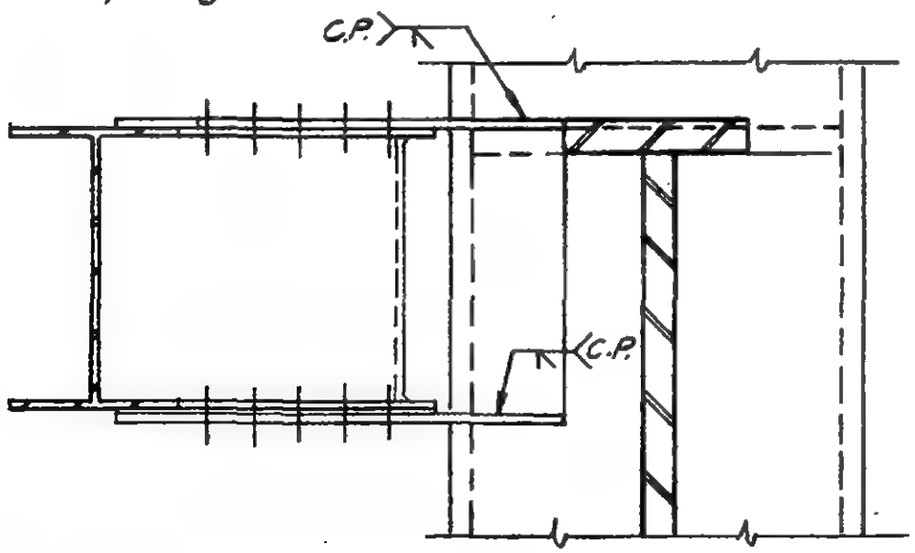

Section a-a

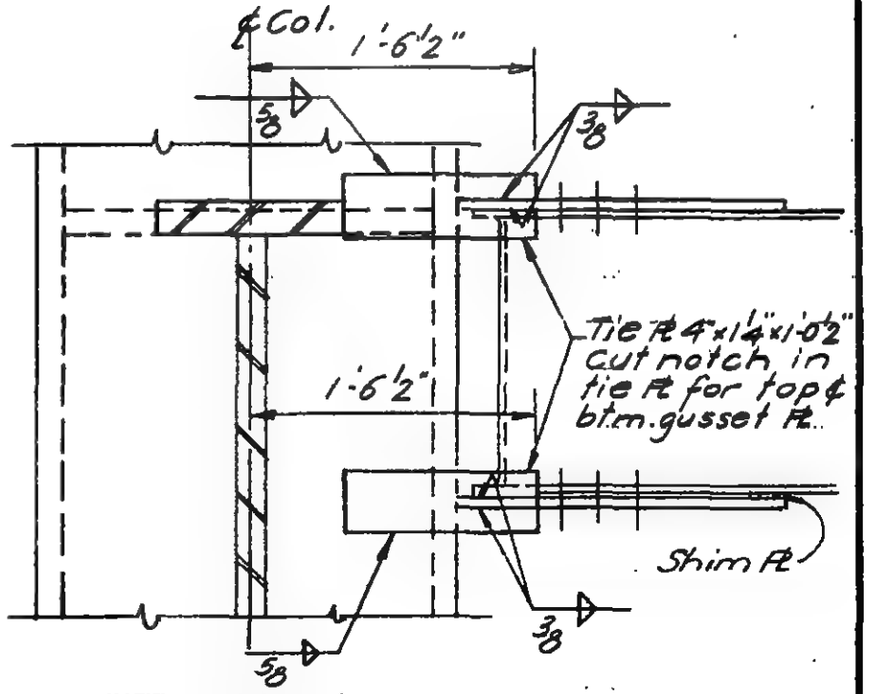

Section c-c

LICENSED PROFESSIONAL ENGINEER
LESLIE E. ROBERTSON
No. 34360
UNIVERSITY OF THE STATE OF NEW YORK

6-AB5-70

WORTHINGTON, SKILLING, HELLE & JACKSON Civil & Structural Engineers

PROJECT THE WORLD TRADE CENTER | TITLE CONNECTION DETAIL 873 A | DATE 7-14-67

REVISIONS

9-29-67

10-31-67

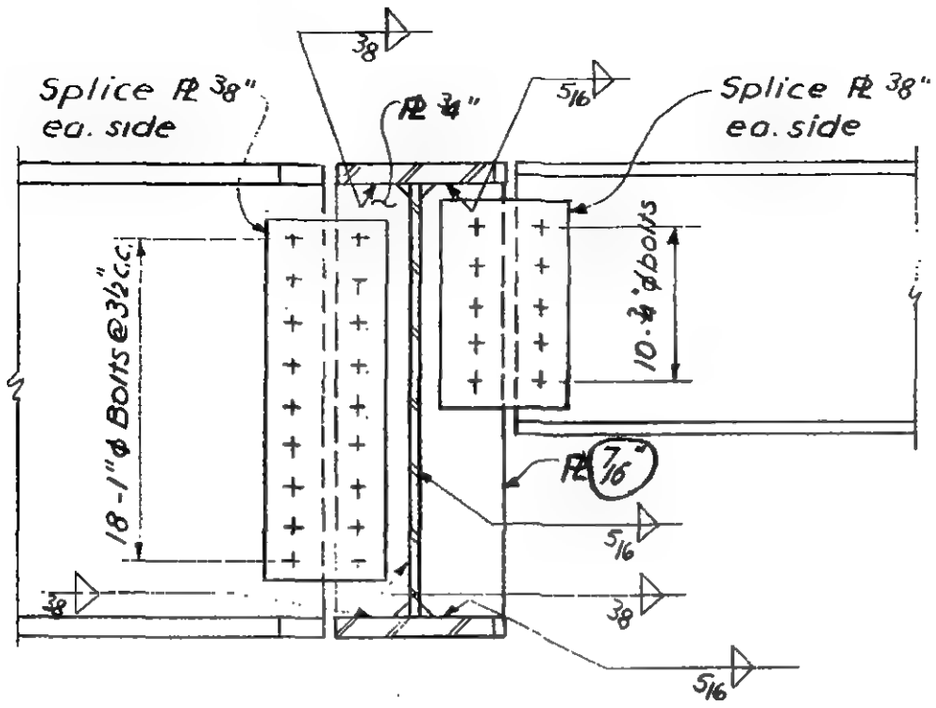

Section a-a

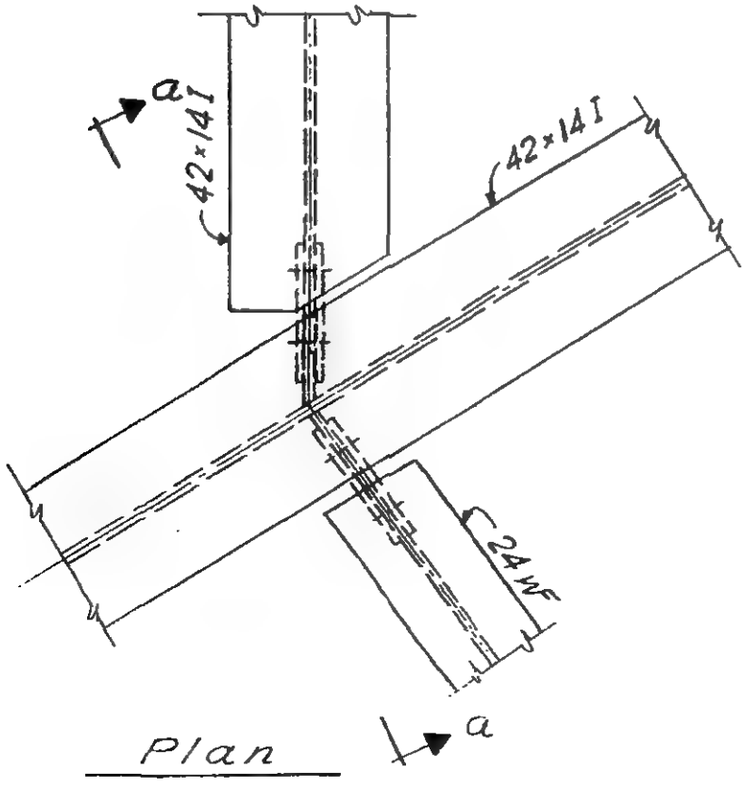

Plan

LICENSED PROFESSIONAL ENGINEER
LESLIE E. ROBERTSON
NO. [illegible]
STATE OF NEW YORK

6-AB5-71

WORTHINGTON, SKILLING, HELLE & JACKSON Civil & Structural Engineers

PROJECT THE WORLD TRADE CENTER | TITLE CONNECTION DETAIL 874 A | DATE 7-14-67

REVISIONS

9-29-67

10-4-67

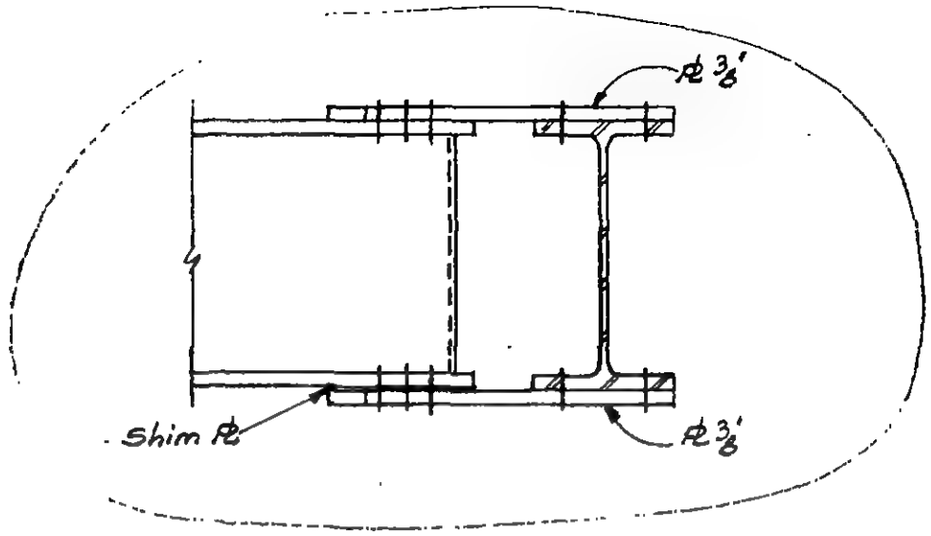

Section a-a

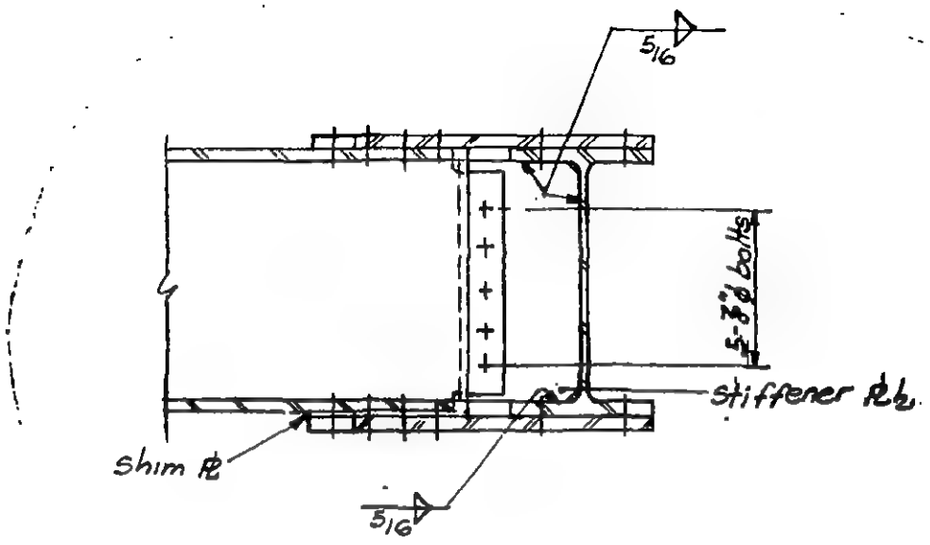

Section b-b

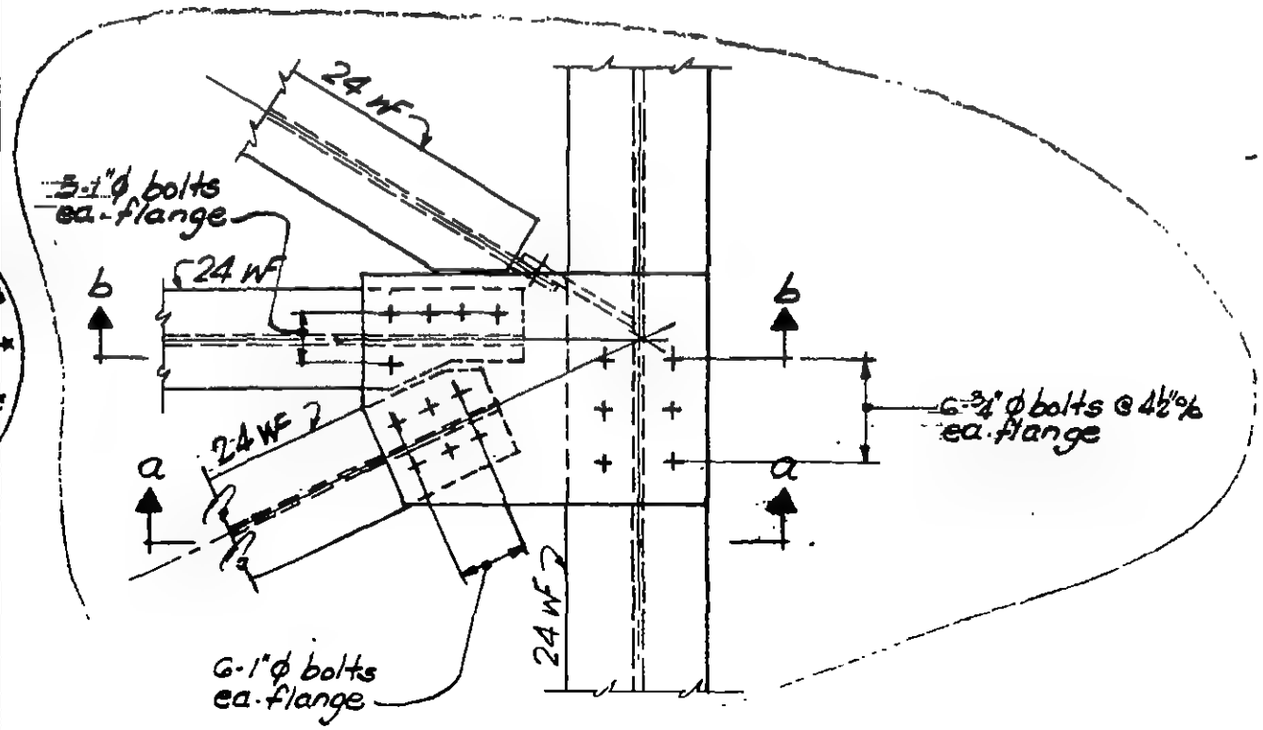

Plan

LICENSED PROFESSIONAL ENGINEER
LESLIE E. ROBERTSON
NEW YORK
UNIVERSITY OF THE STATE OF

6-AB5-72

WORTHINGTON, SKILLING, HELLE & JACKSON . Civil & Structural Engineers

PROJECT THE WORLD TRADE CENTER | TITLE CONNECTION DETAIL 875A | DATE 7-14-67

REVISIONS

9-29-67

10-4-67

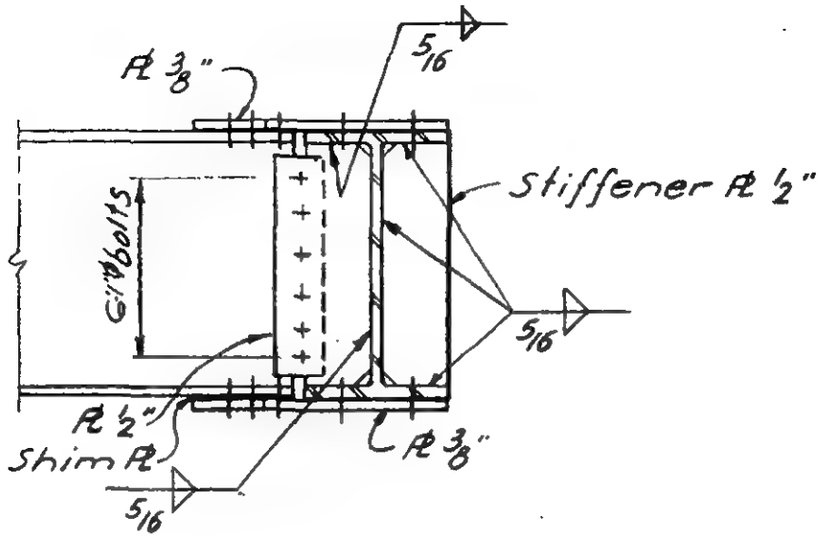

Section a-a
Section b-b, opp. hand

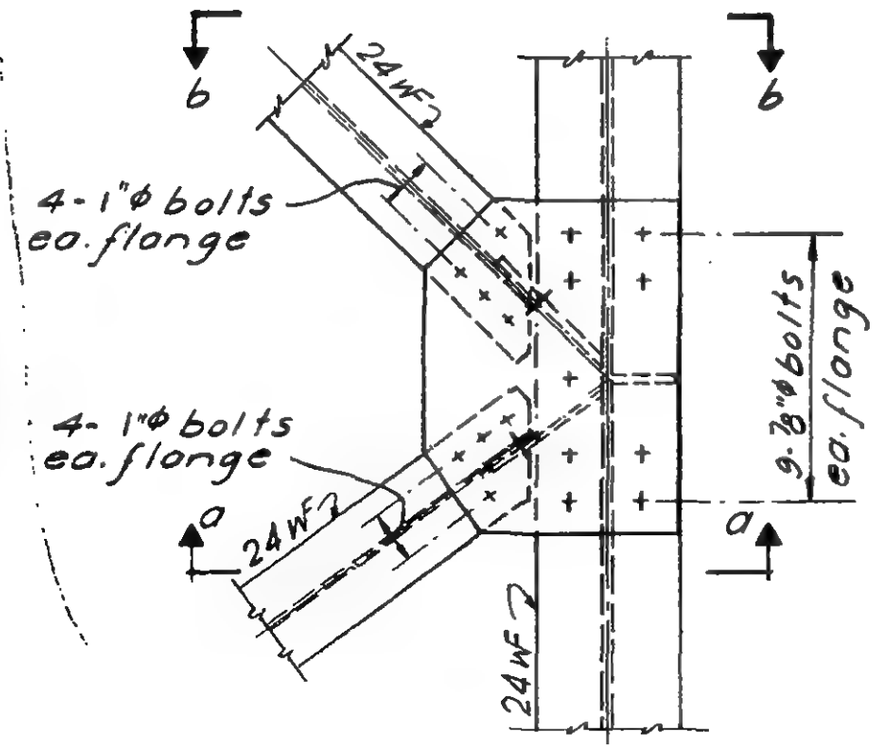

Plan

LICENSED PROFESSIONAL ENGINEER
LESLIE E. ROBERTSON
No. 34360
UNIVERSITY OF THE STATE OF NEW YORK

6-AB5-73

SKILLING - HELLE - CHRISTIANSEN - ROBERTSON Structural & Civil Engineers

PROJECT THE WORLD TRADE CENTER | TITLE CONNECTION DETAIL 876 A | DATE 9-29-67

REVISIONS

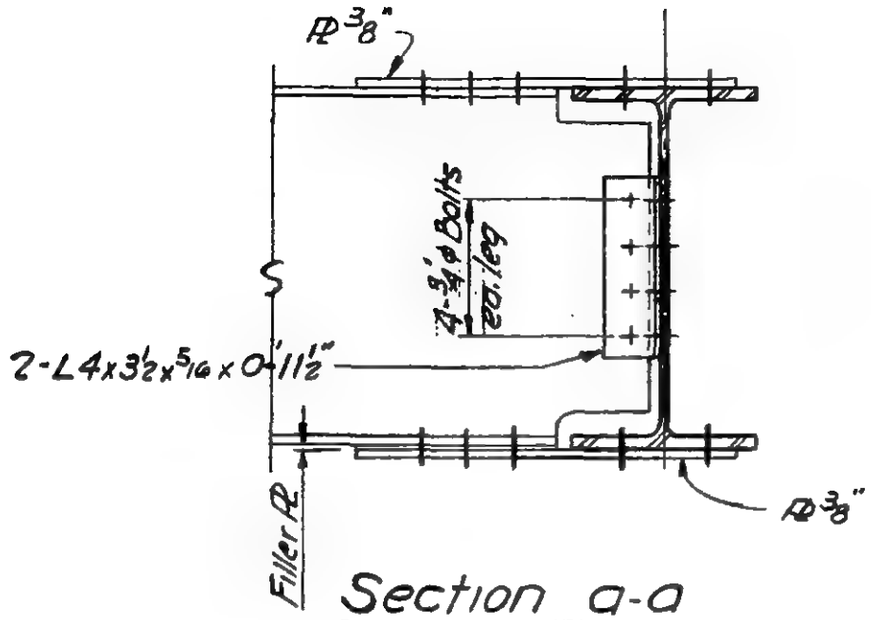

Section a-a

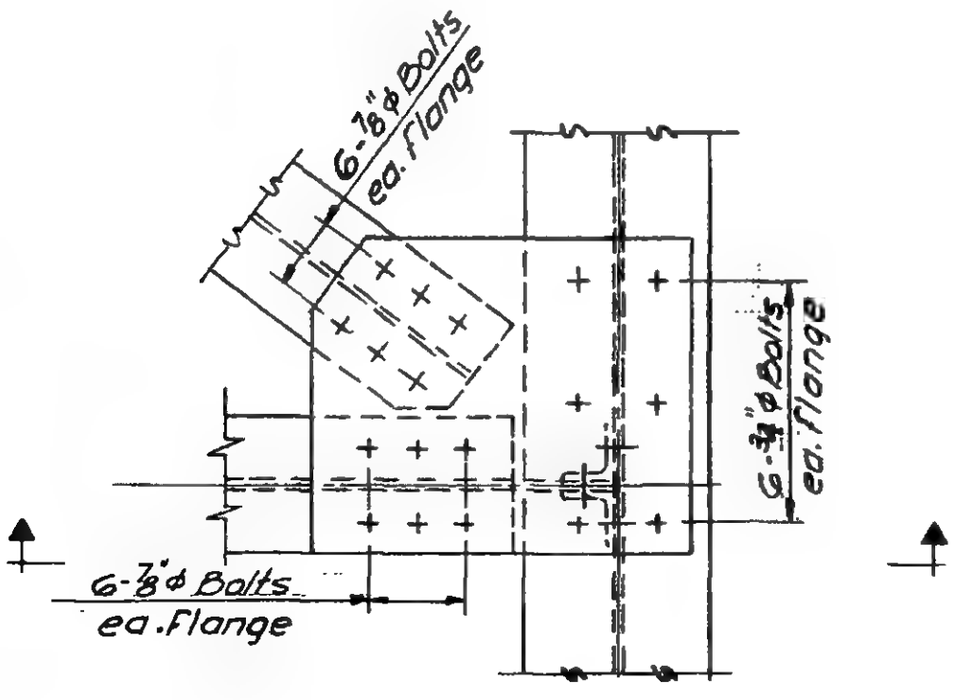

Plan

LICENSED PROFESSIONAL ENGINEER
LESLIE E. ROBERTSON
No. 34360
UNIVERSITY OF THE STATE OF NEW YORK

6-AB5-74

WORTHINGTON, SKILLING, HELLE & JACKSON — Civil & Structural Engineers

PROJECT THE WORLD TRADE CENTER | TITLE CONNECTION DETAIL 877A | DATE 7-14-67

REVISIONS

9-20-67

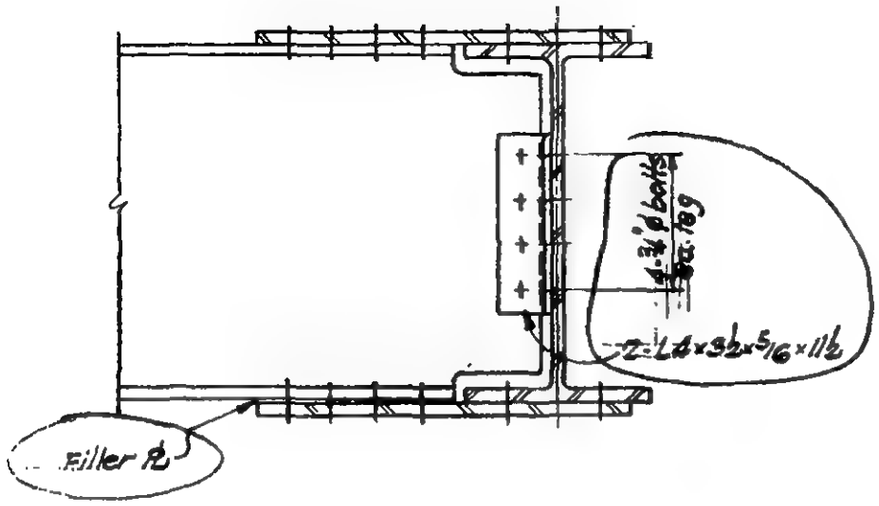

Section a-a

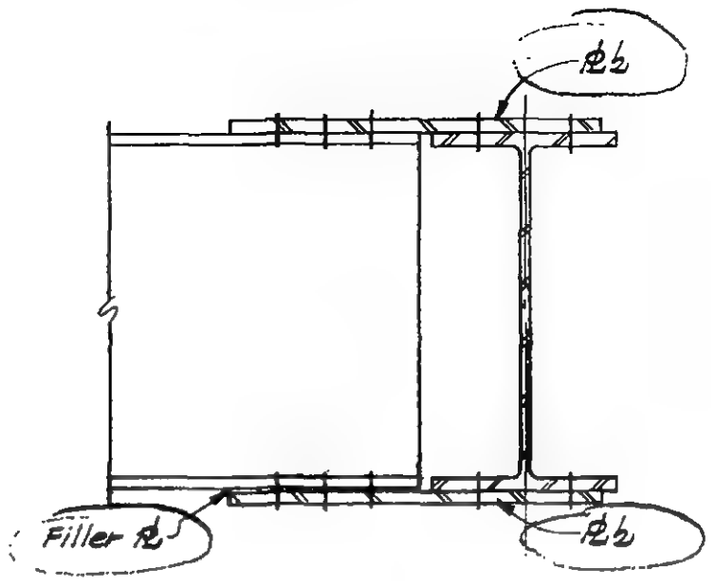

Section b-b

Section c-c, oppisite hand

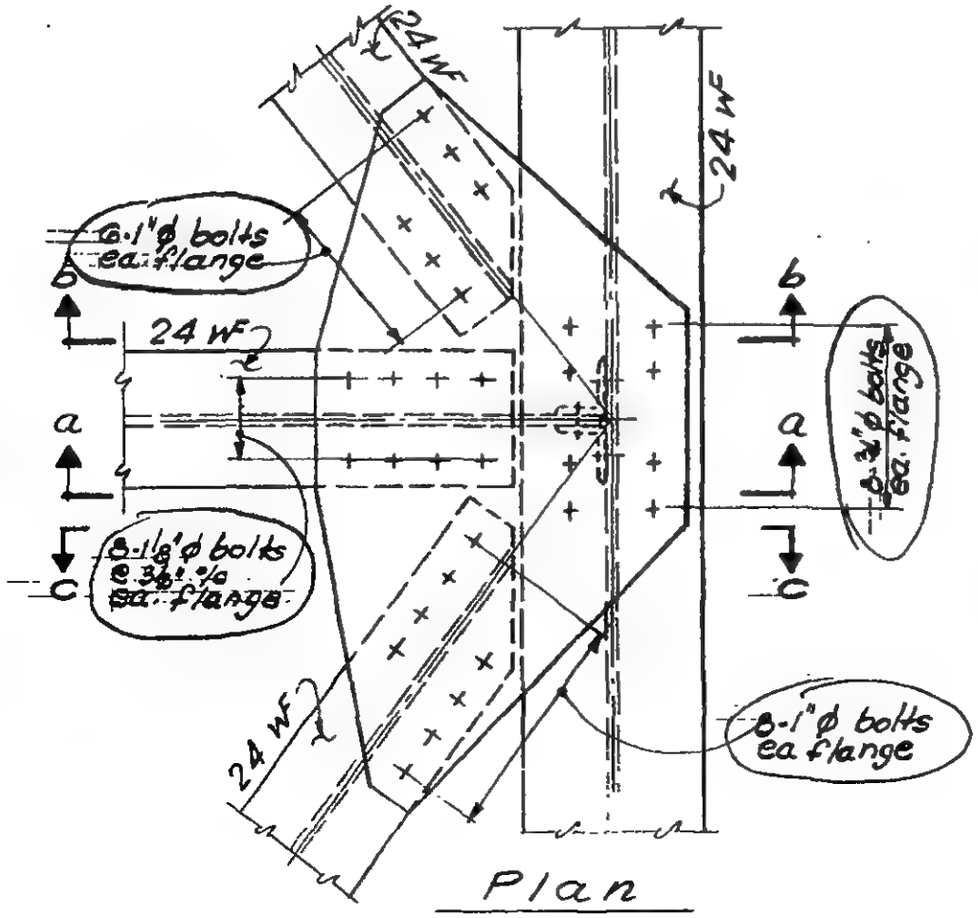

Plan

LICENSED PROFESSIONAL ENGINEER
LESLIE E. ROBERTSON
No. 34360
UNIVERSITY OF THE STATE OF NEW YORK

6-AB5-75

WORTHINGTON, SKILLING, HELLE & JACKSON Civil & Structural Engineers

PROJECT	TITLE	DATE
THE WORLD TRADE CENTER	CONNECTION DETAIL 878A	7-14-67

REVISIONS
9-29-67
10-31-67

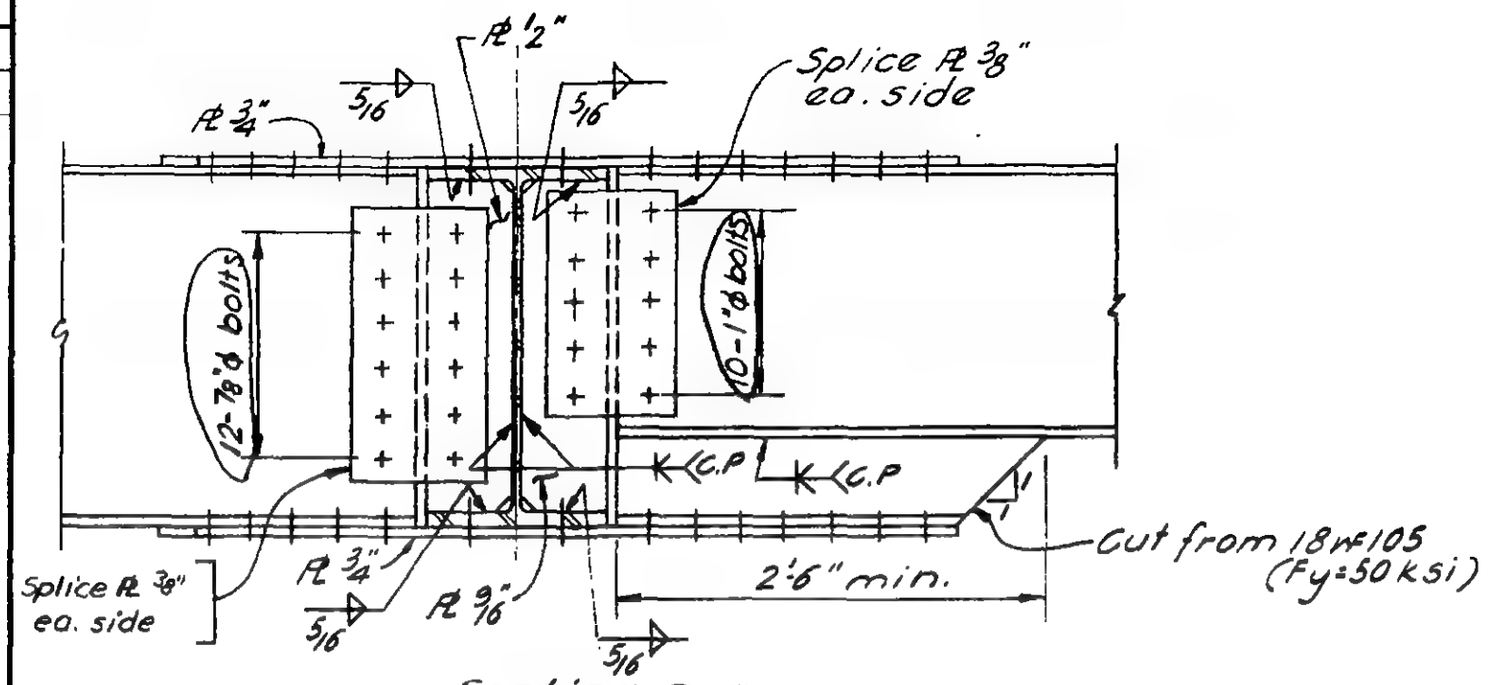

Section a-a

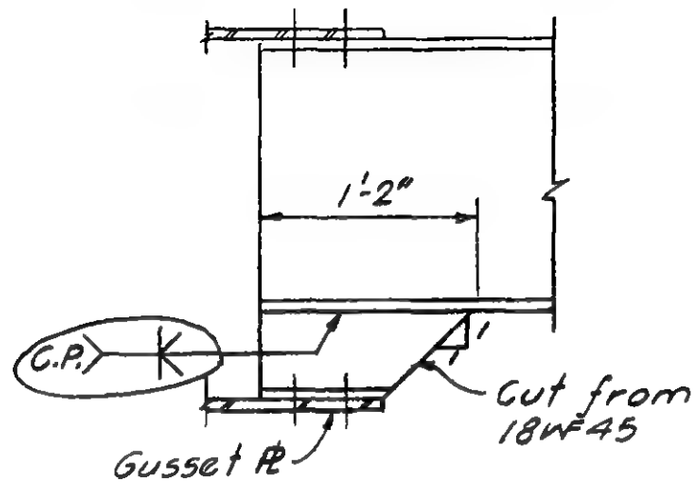

Section b-b

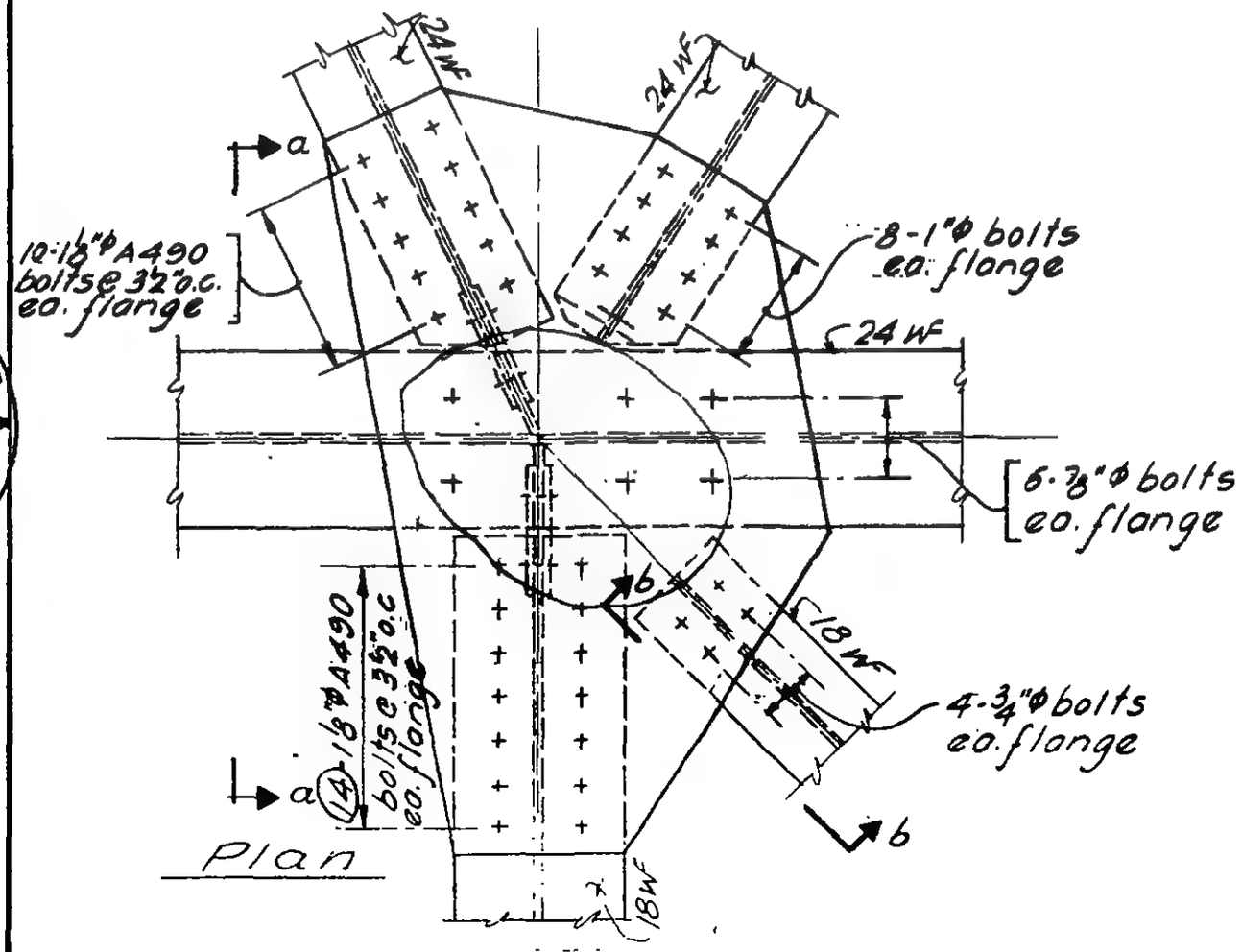

Plan

LICENSED PROFESSIONAL ENGINEER
LESLIE E. ROBERTSON
No. 34360
UNIVERSITY OF THE STATE OF NEW YORK

6-AB5-76

SKILLING - HELLE - CHRISTIANSEN - ROBERTSON Structural & Civil Engineers

PROJECT THE WORLD TRADE CENTER | TITLE CONNECTION DETAIL 879(A) | DATE 9-29-67

REVISIONS

10-31-67

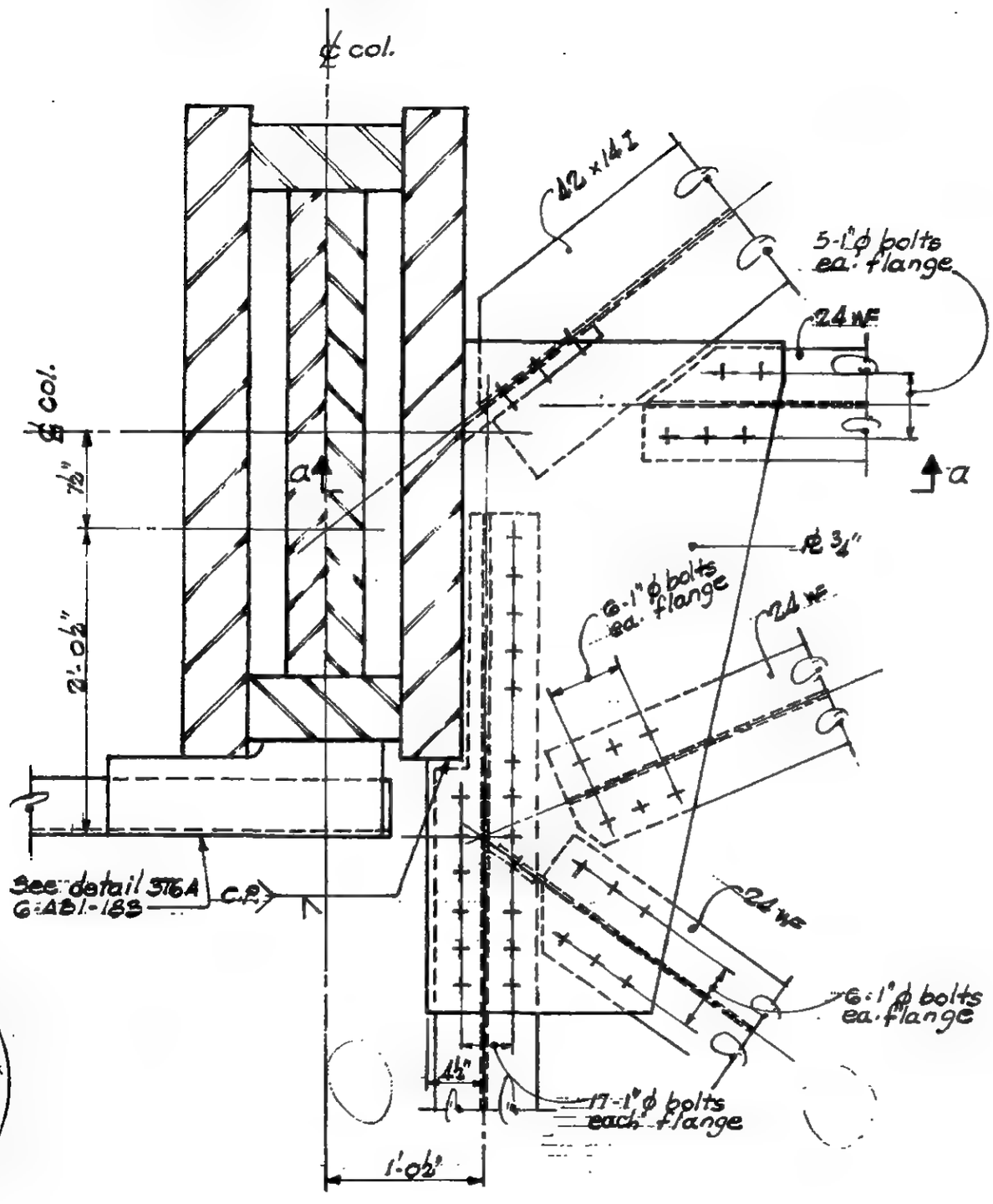

PLAN

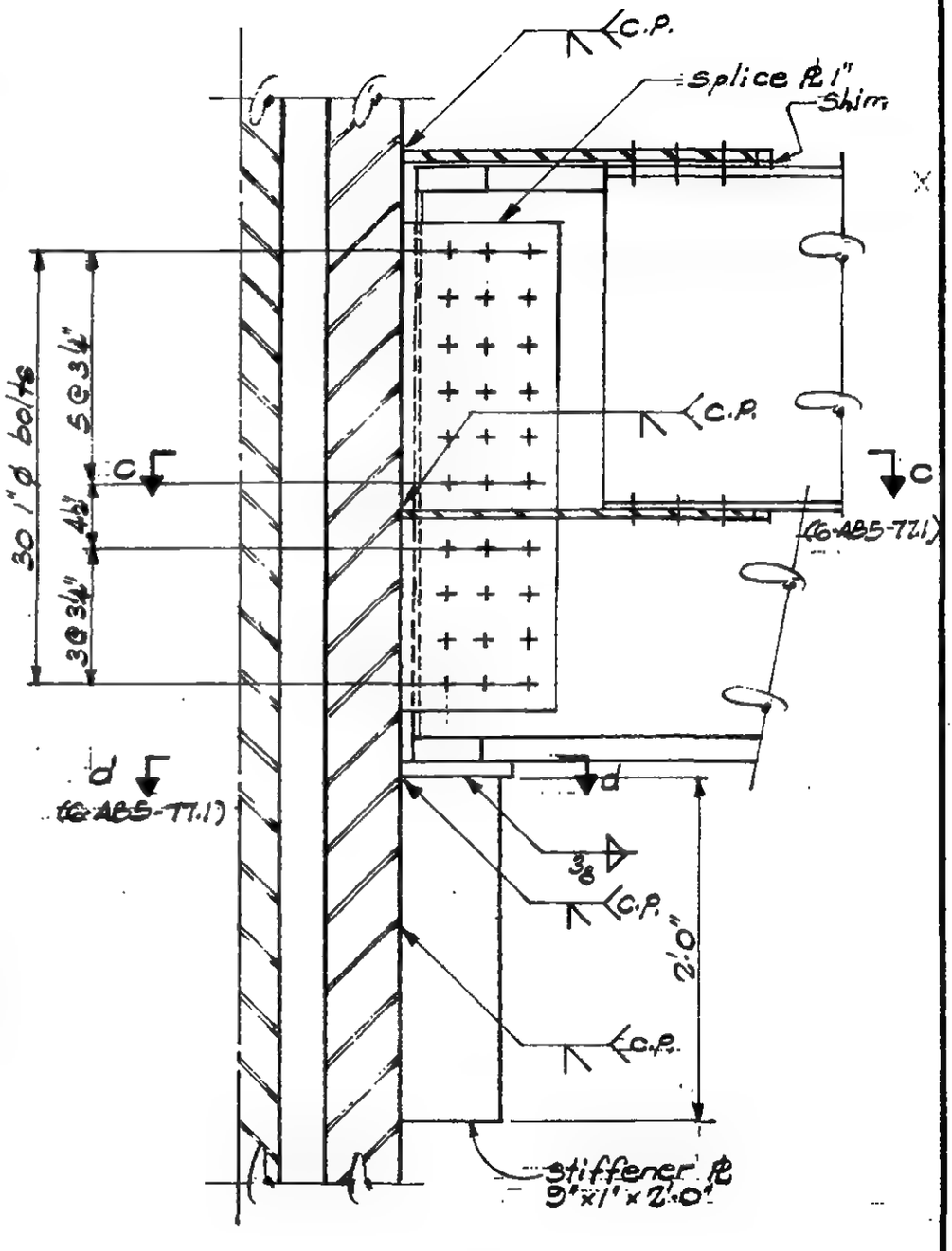

Section a-a

LICENSED PROFESSIONAL ENGINEER
LESLIE E. ROBERTSON
No. 34360
UNIVERSITY OF THE STATE OF NEW YORK

SKILLING - HELLE - CHRISTIANSEN - ROBERTSON Structural & Civil Engineers

PROJECT THE WORLD TRADE CENTER | TITLE CONNECTION DETAIL 879(A) | DATE 9-29-67

REVISIONS

10-31-67

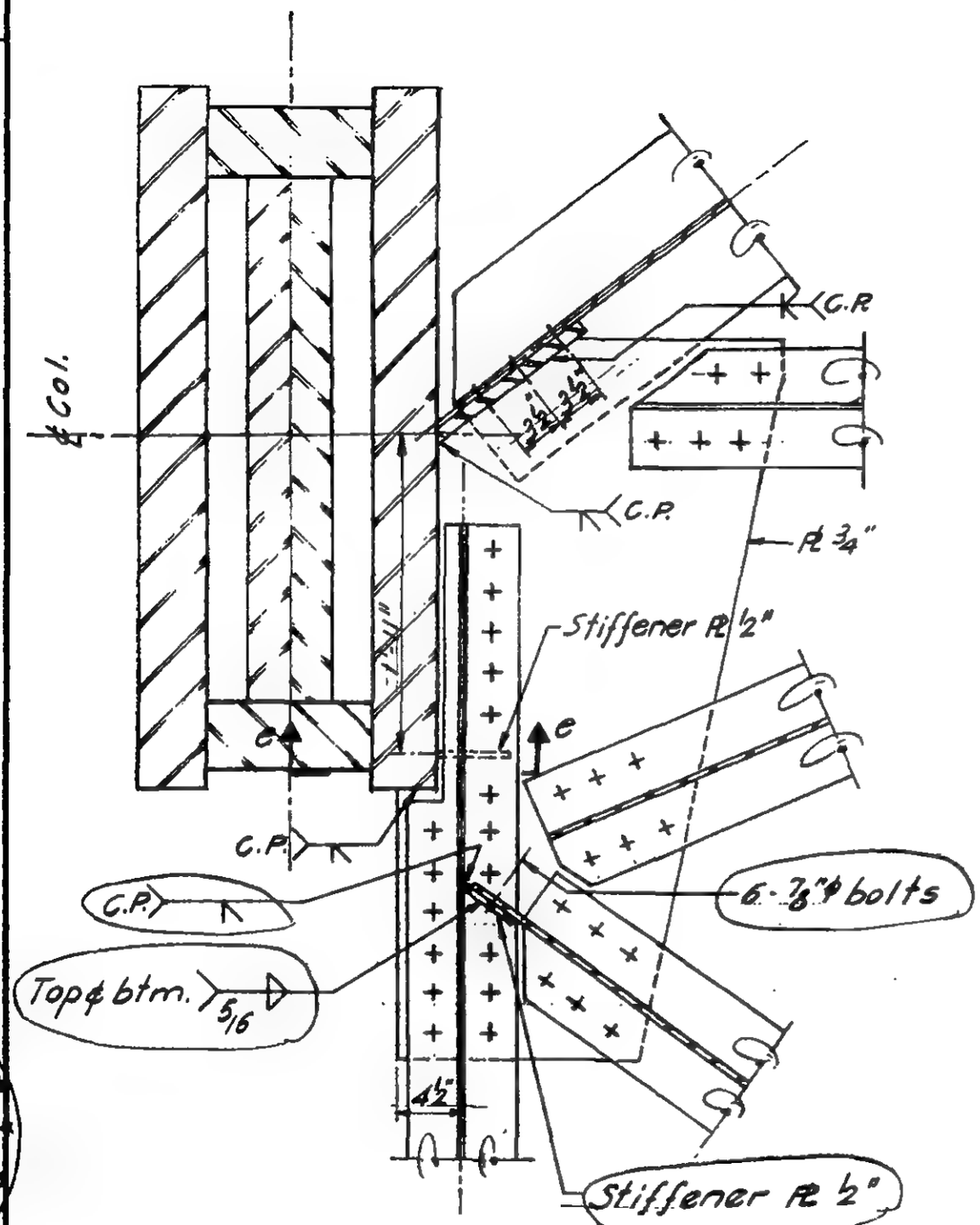

Section c-c

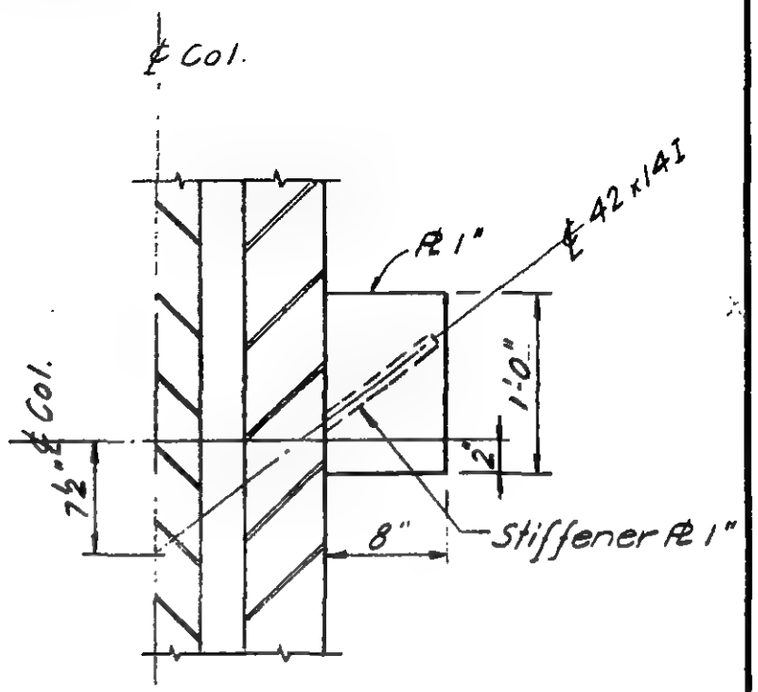

Section d-d

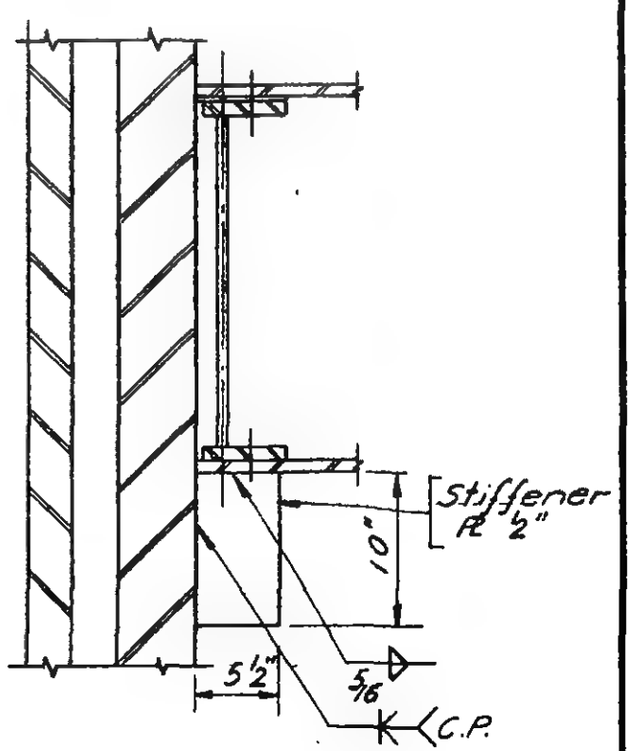

Section e-e

LICENSED PROFESSIONAL ENGINEER
LESLIE E. ROBERTSON
No. 34360
UNIVERSITY OF THE STATE OF NEW YORK

6-AB5-77.1

WORTHINGTON, SKILLING, HELLE & JACKSON — Civil & Structural Engineers

PROJECT THE WORLD TRADE CENTER | TITLE CONNECTION DETAIL 880(A) | DATE 7-14-67

REVISIONS
9-29-67
10-31-67

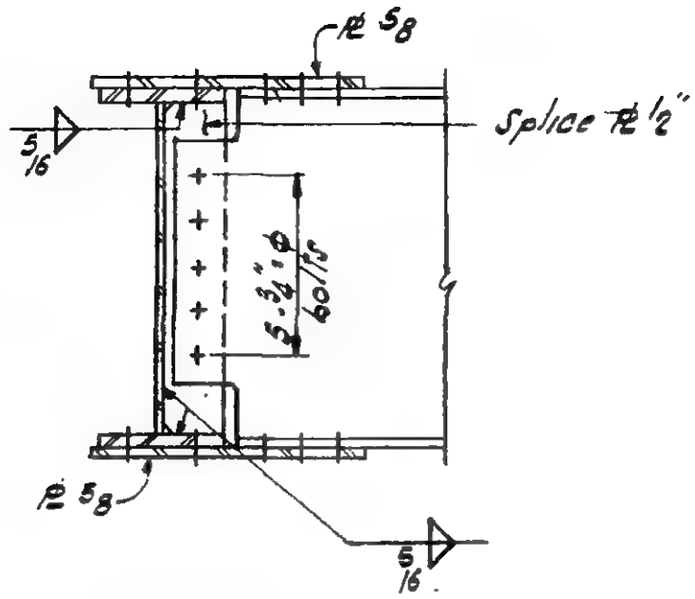

Section a-a

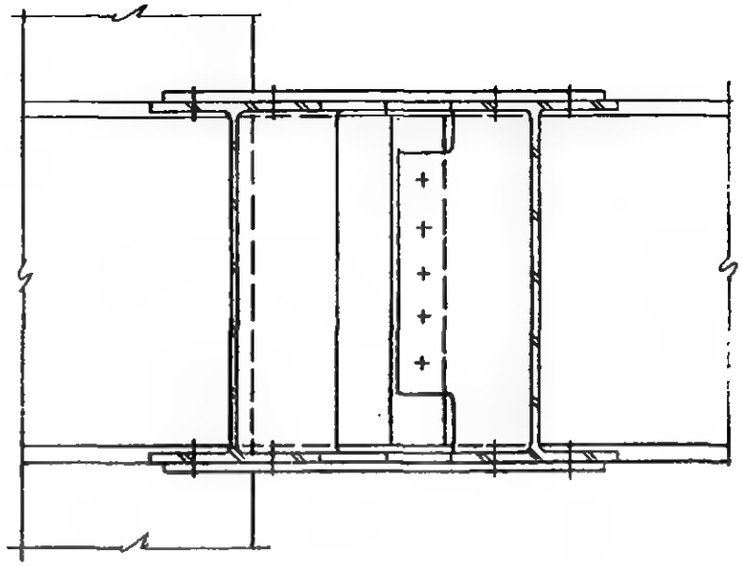

Section b-b

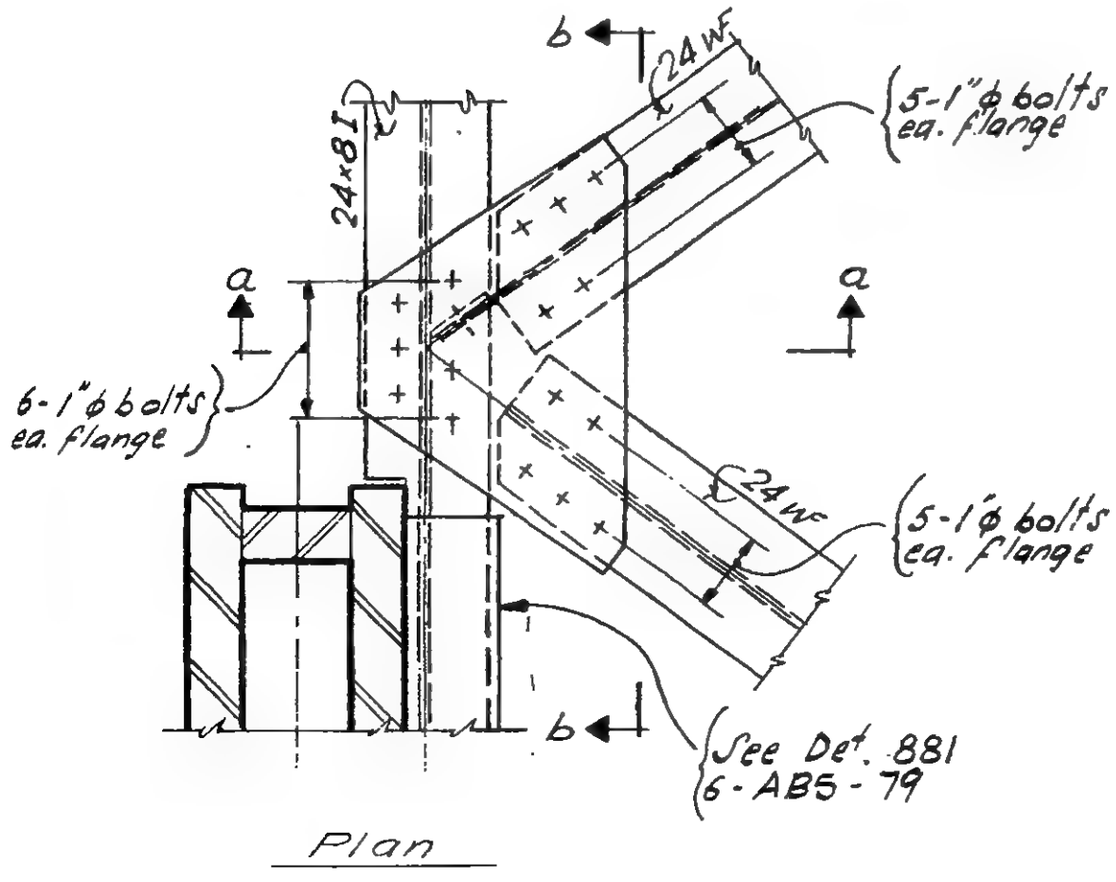

Plan

LICENSED PROFESSIONAL ENGINEER LESLIE E. ROBERTSON No. 24260 UNIVERSITY OF THE STATE OF NEW YORK

6-AB5-78

SKILLING - HELLE - CHRISTIANSEN - ROBERTSON — Structural & Civil Engineers

PROJECT: THE WORLD TRADE CENTER | TITLE: CONNECTION DETAIL 881(A) | DATE: 7-14-67

REVISIONS
8-14-67
9-21-67
10-31-67

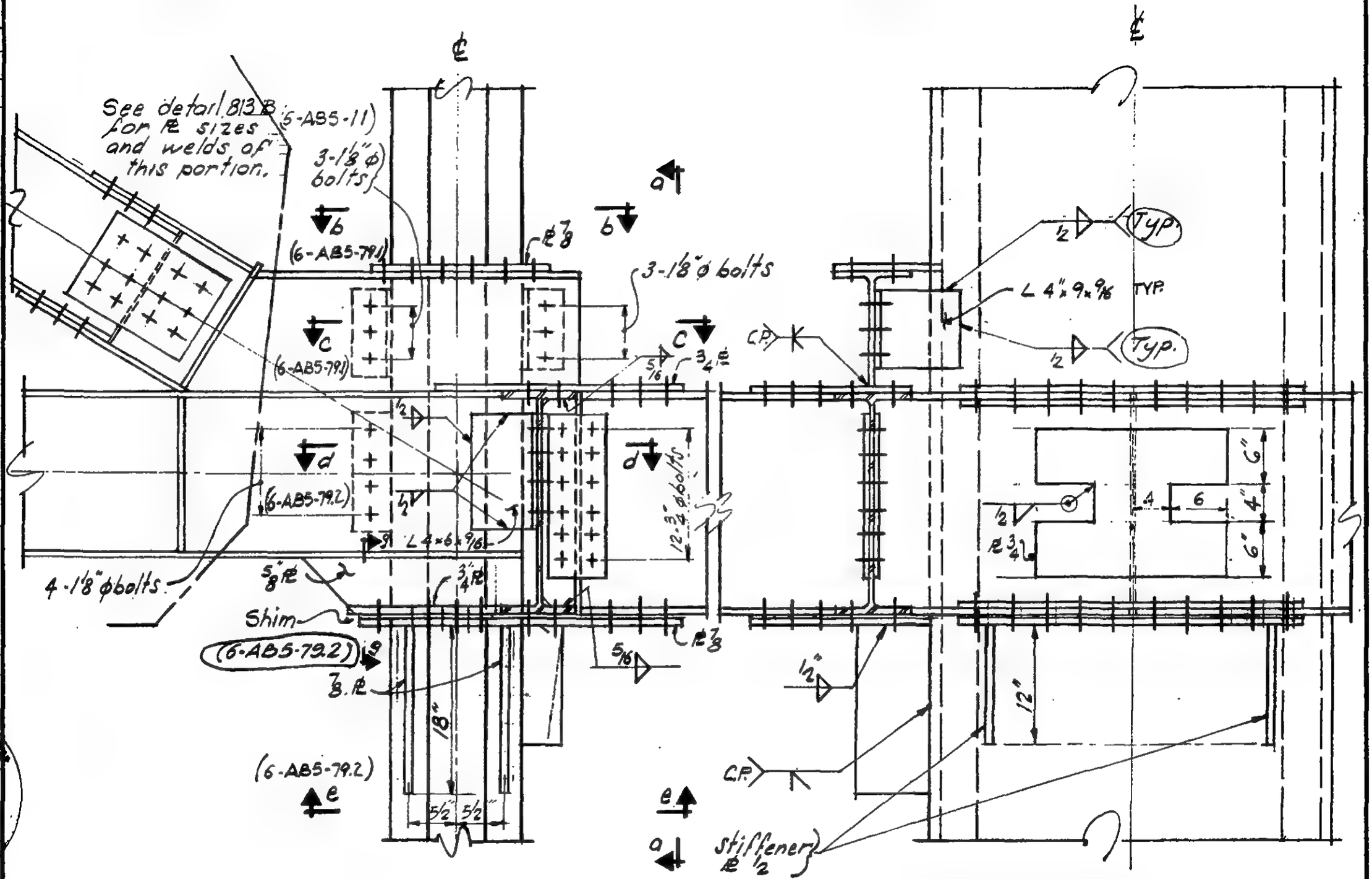

Section a-a

LICENSED PROFESSIONAL ENGINEER — LESLIE E. ROBERTSON — No. 34360 — UNIVERSITY OF THE STATE OF NEW YORK

6-ABS-79

SKILLING - HELLE - CHRISTIANSEN - ROBERTSON Structural & Civil Engineers

PROJECT THE WORLD TRADE CENTER | TITLE CONNECTION DETAIL 88(A) | DATE 9-29-67

REVISIONS

10-31-67

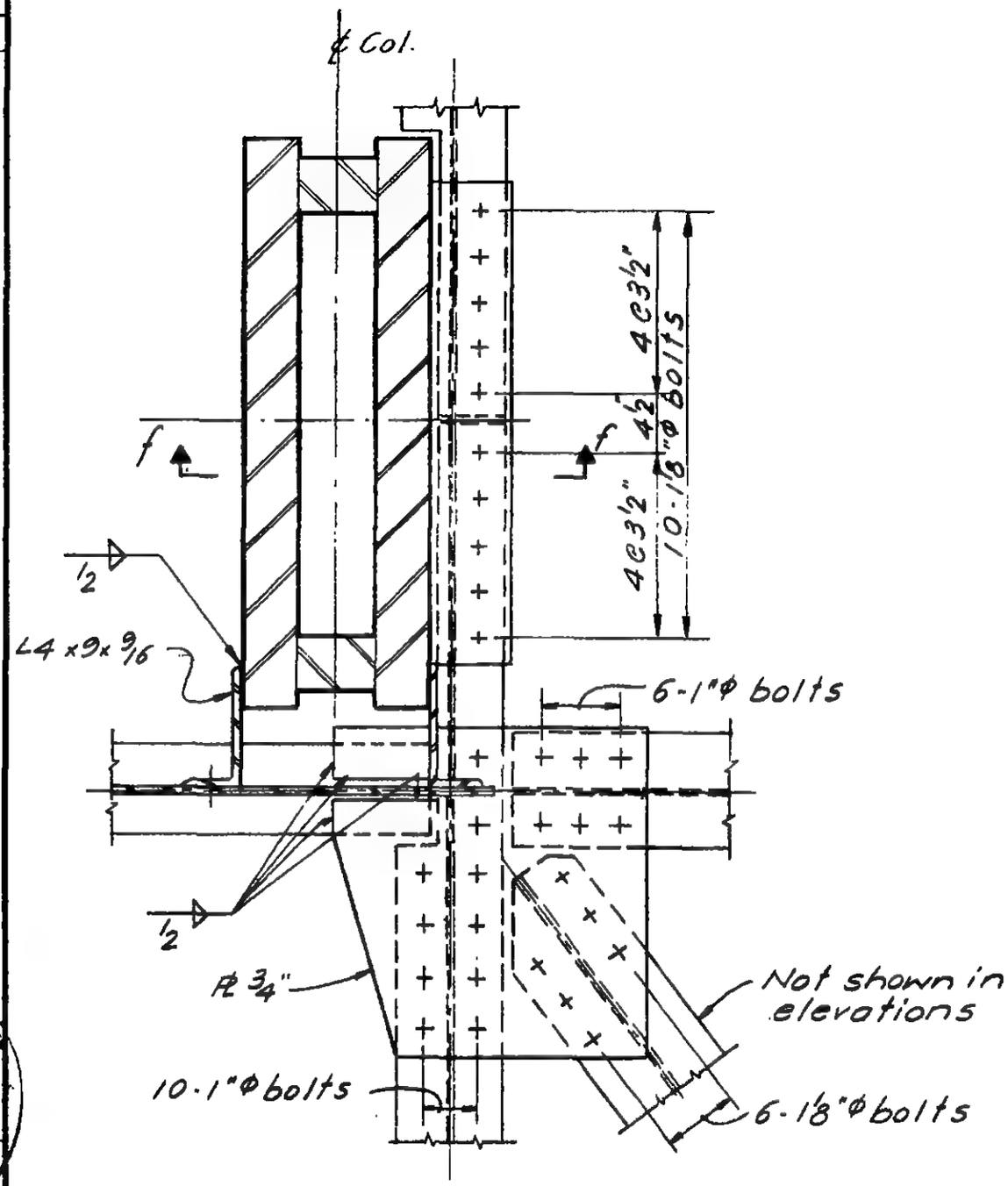

Section c-c

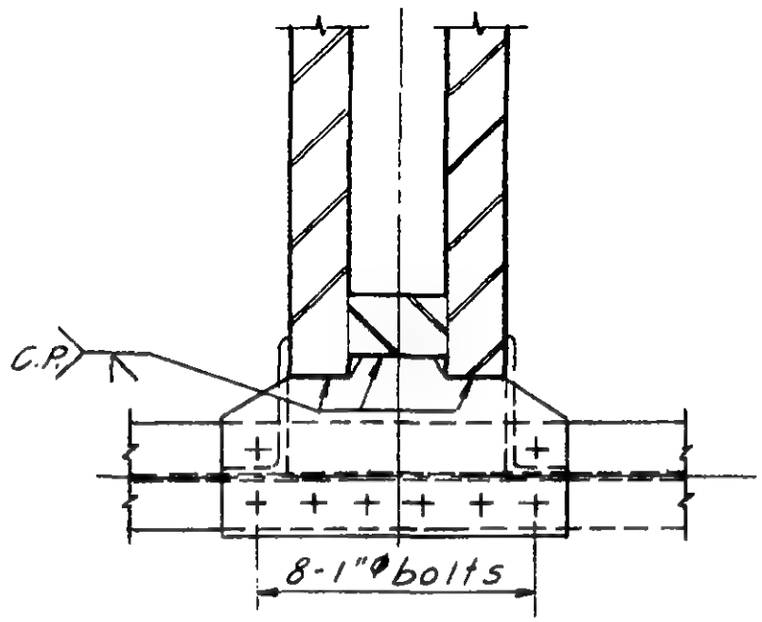

Section b-b

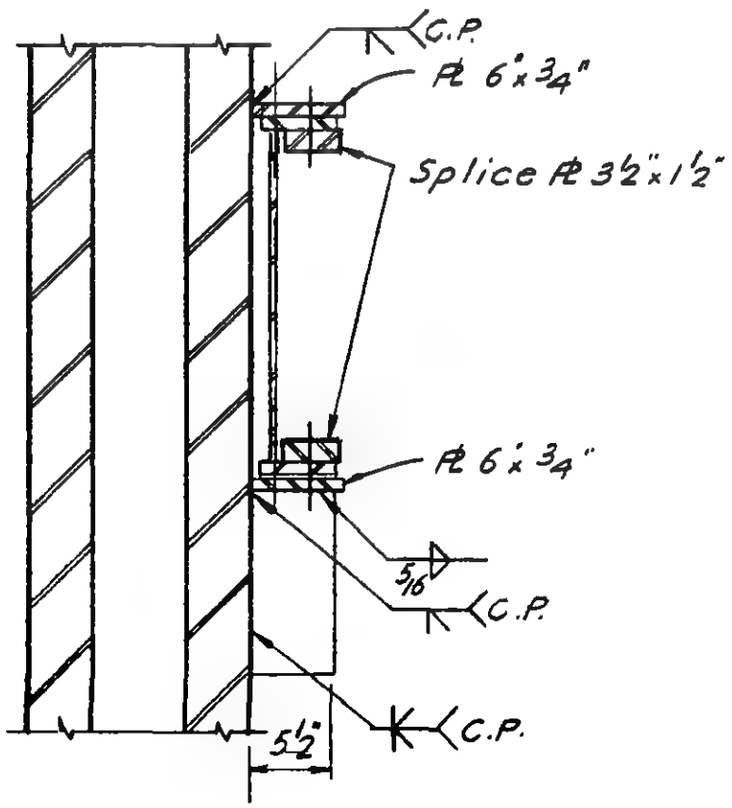

Section f-f

LICENSED PROFESSIONAL ENG'NEER
LESLIE E. ROBERTSON
No. 34360
UNIVERSITY OF THE STATE OF NEW YORK

6-AB5-79.1

SKILLING - HELLE - CHRISTIANSEN - ROBERTSON Structural & Civil Engineers

PROJECT THE WORLD TRADE CENTER | TITLE CONNECTION DETAIL 88(A) | DATE 7-14-67

REVISIONS
9-20-67
10-31-67

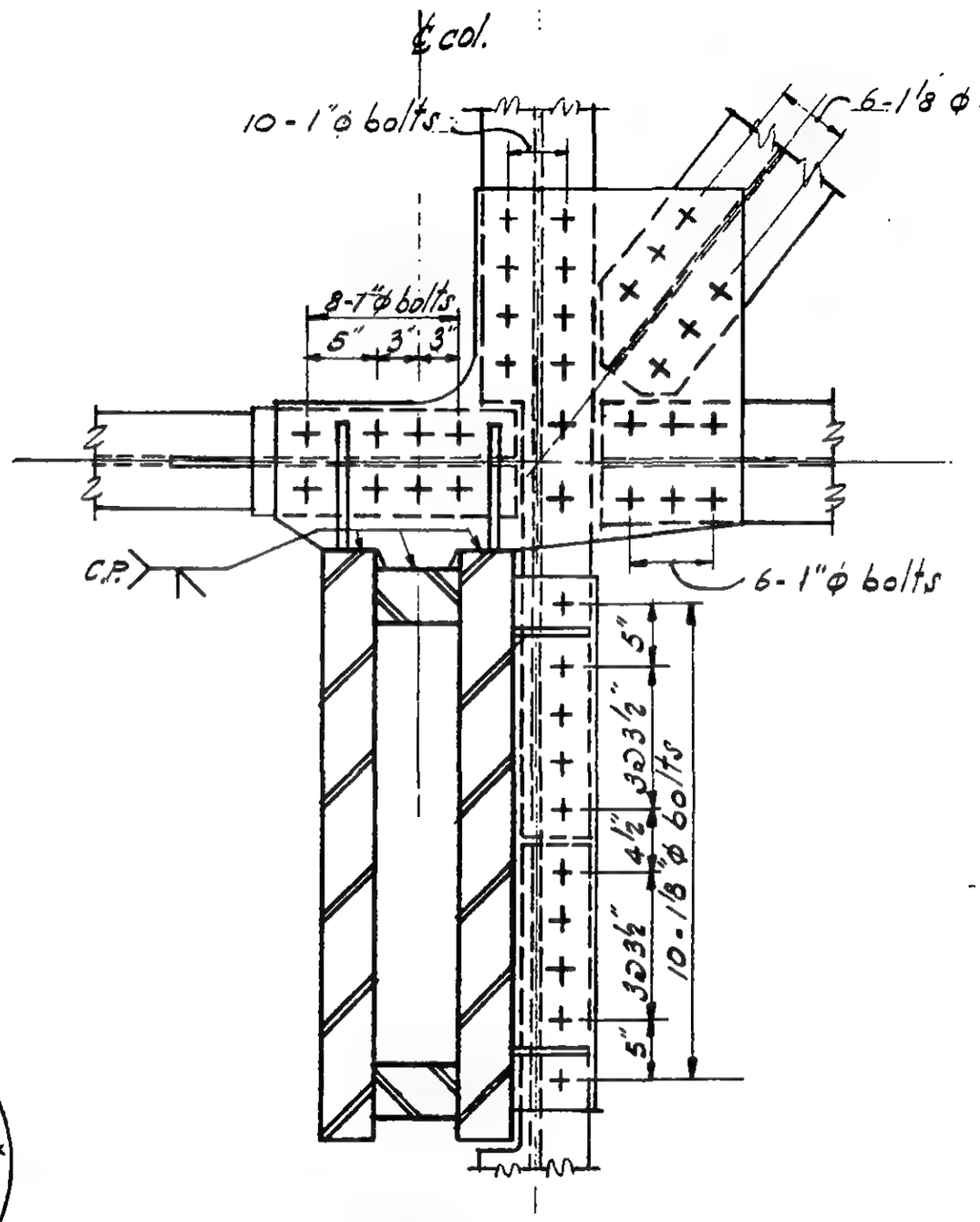

Section e-e

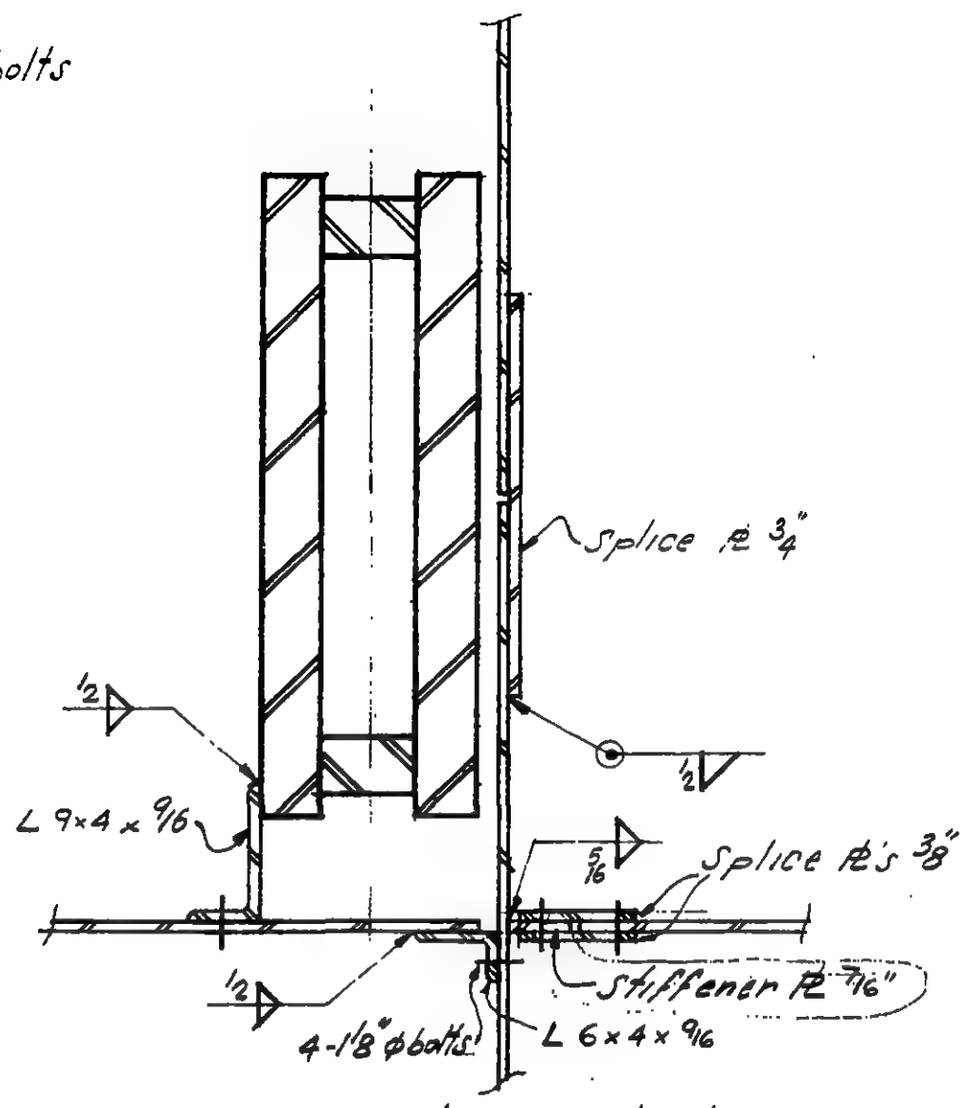

Section d-d

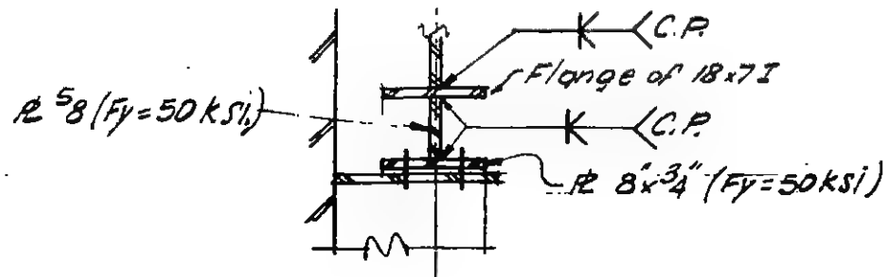

Section g-g

LICENSED PROFESSIONAL ENGINEER
LESLIE E. ROBERTSON
No. 34360
UNIVERSITY OF THE STATE OF NEW YORK

6-AB5-79.2

SKILLING - HELLE - CHRISTIANSEN - ROBERTSON Structural & Civil Engineers

PROJECT THE WORLD TRADE CENTER | TITLE CONNECTION DETAIL 882A | DATE 7-14-67

REVISIONS
9-29-67
10-31-67

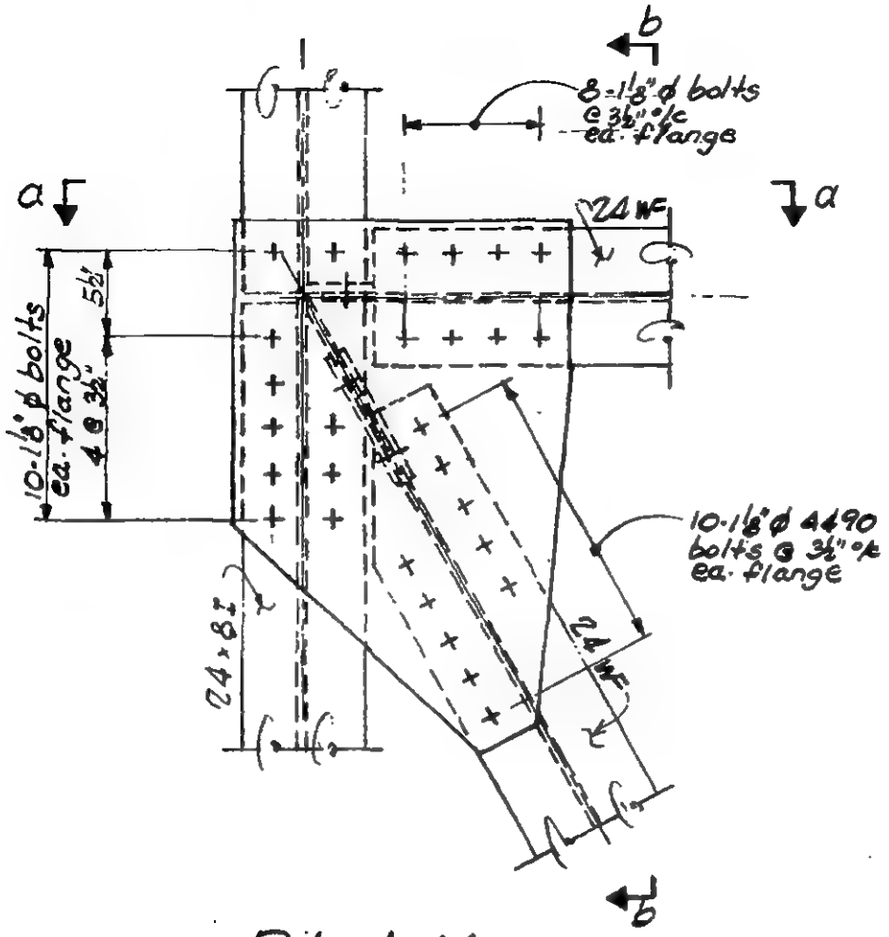

PLAN

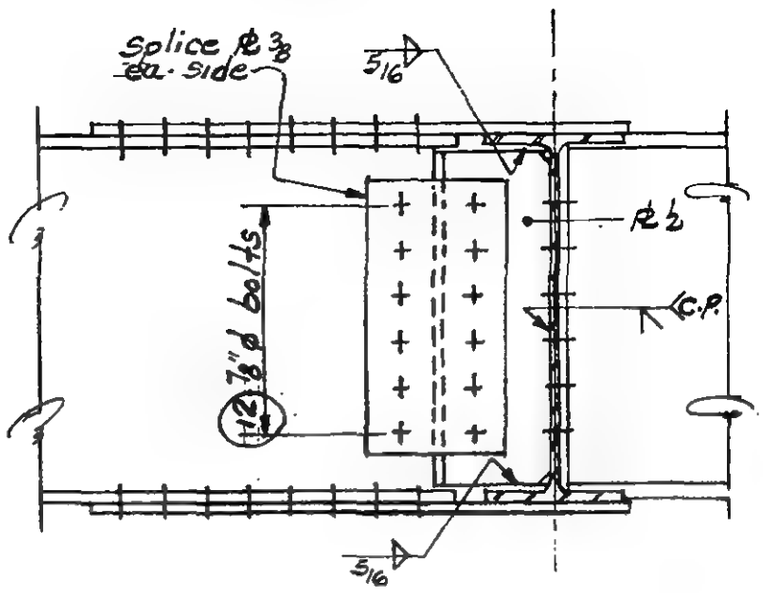

Section b-b

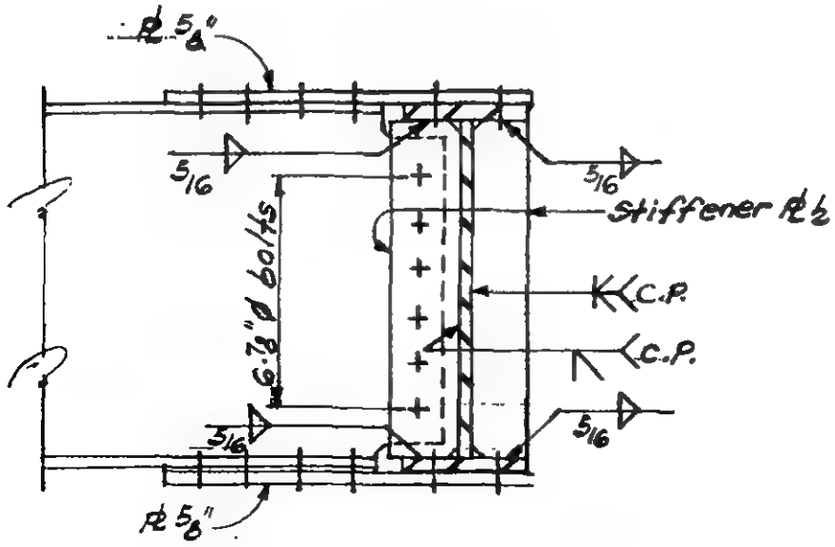

Section a-a

LICENSED PROFESSIONAL ENGINEER
LESLIE E. ROBERTSON
No. 34360
UNIVERSITY OF THE STATE OF NEW YORK

G-AB5-80

SKILLING - HELLE - CHRISTIANSEN - ROBERTSON Structural & Civil Engineers

PROJECT THE WORLD TRADE CENTER | TITLE CONNECTION DETAIL 883 A | DATE 9-29-67

REVISIONS

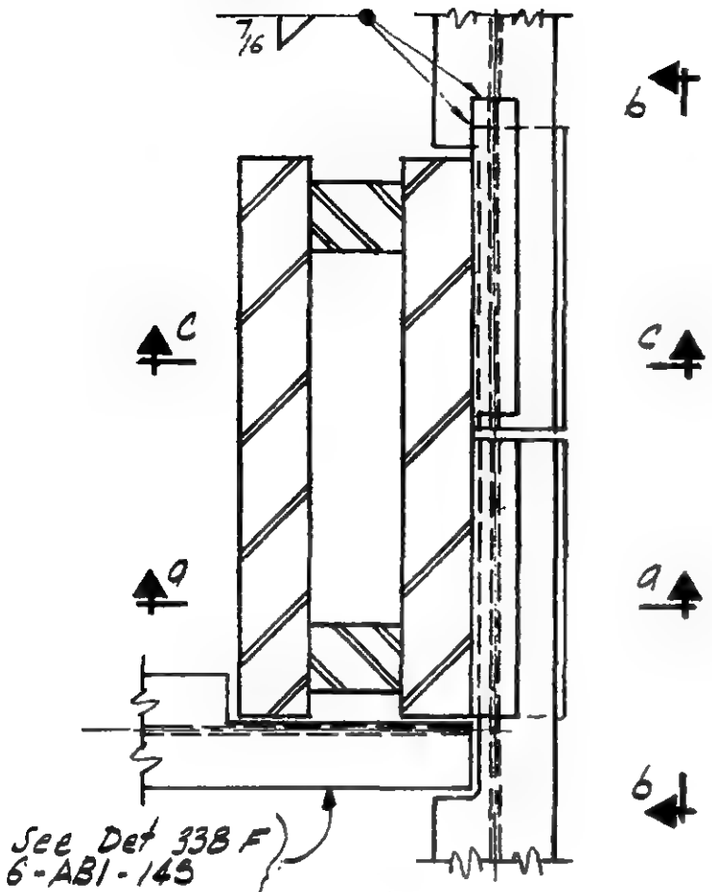

PLAN

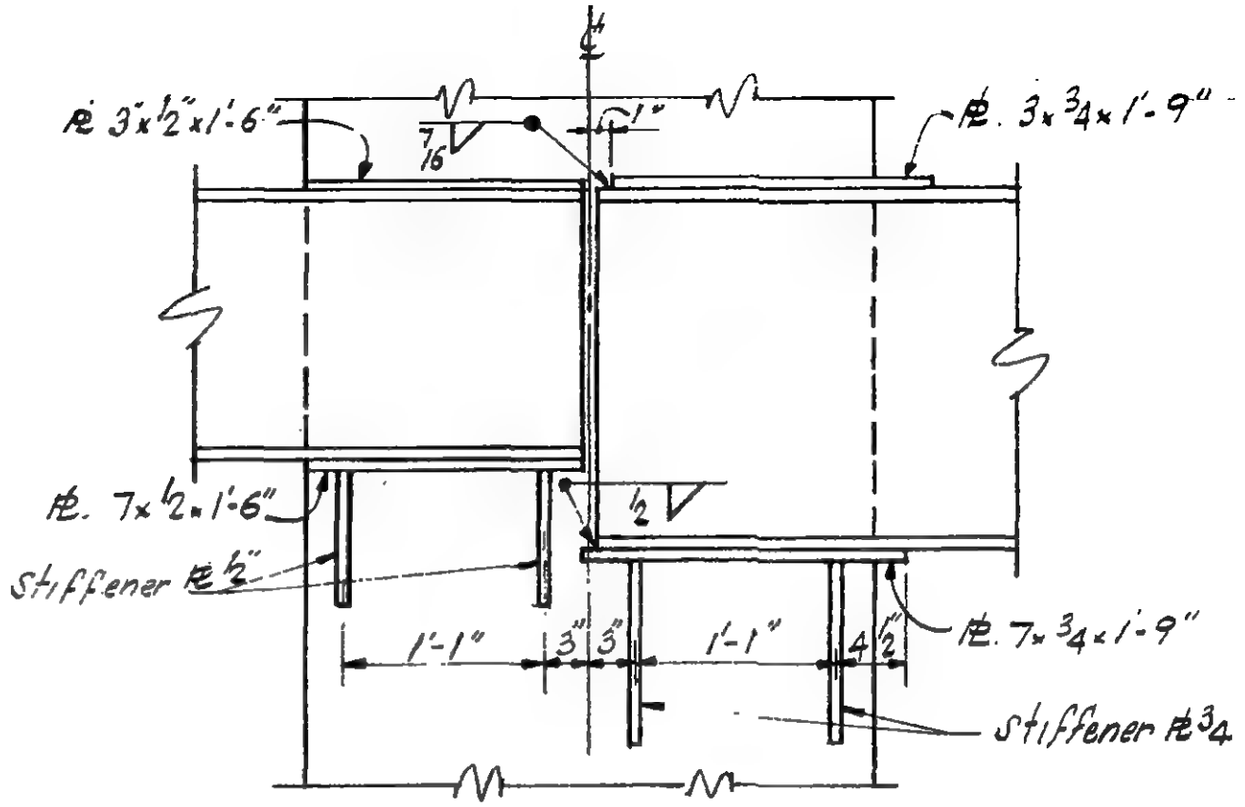

Section b-b

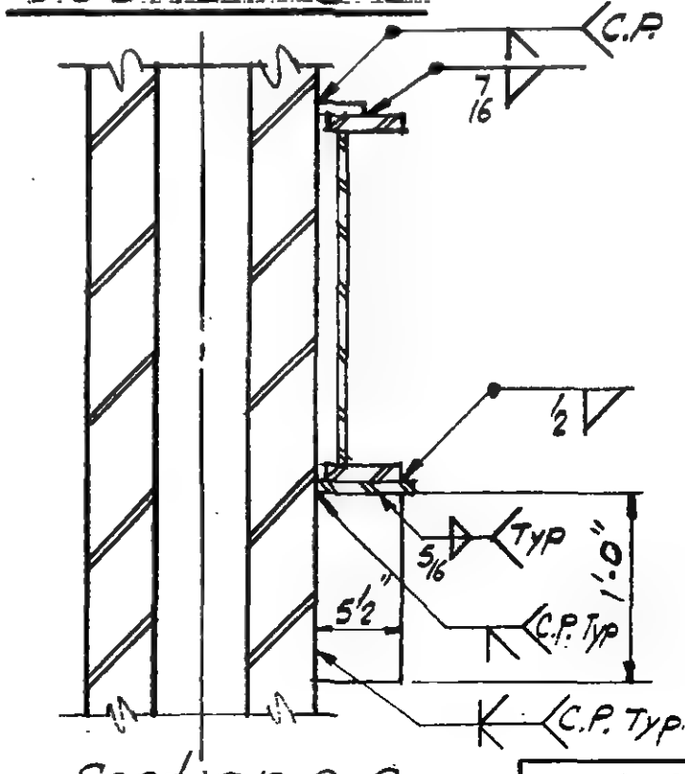

Section c-c

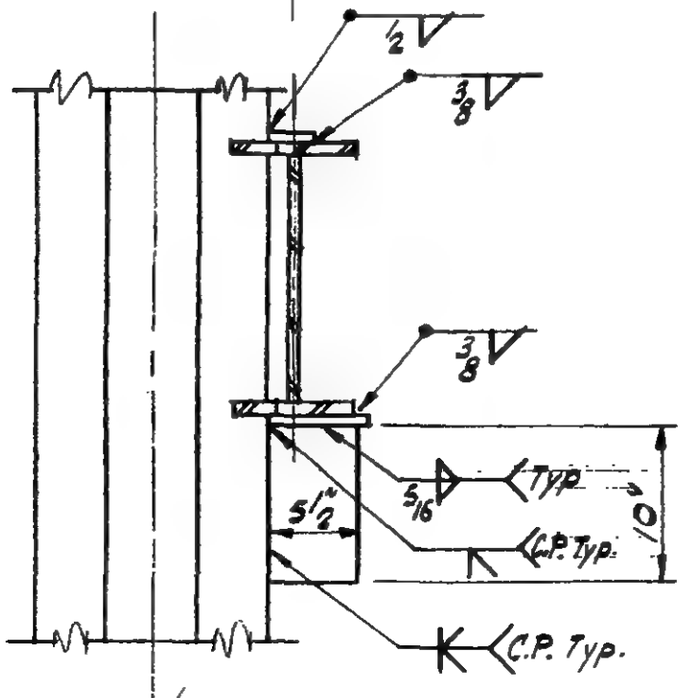

Section a-a

LICENSED PROFESSIONAL ENGINEER
LESLIE E. ROBERTSON
No. 34360
UNIVERSITY OF THE STATE OF NEW YORK

6-AB5-81

SKILLING - HELLE - CHRISTIANSEN - ROBERTSON — Structural & Civil Engineers

PROJECT THE WORLD TRADE CENTER | TITLE CONNECTION DETAIL 884(A) | DATE 9-29-67

REVISIONS
10-31-67

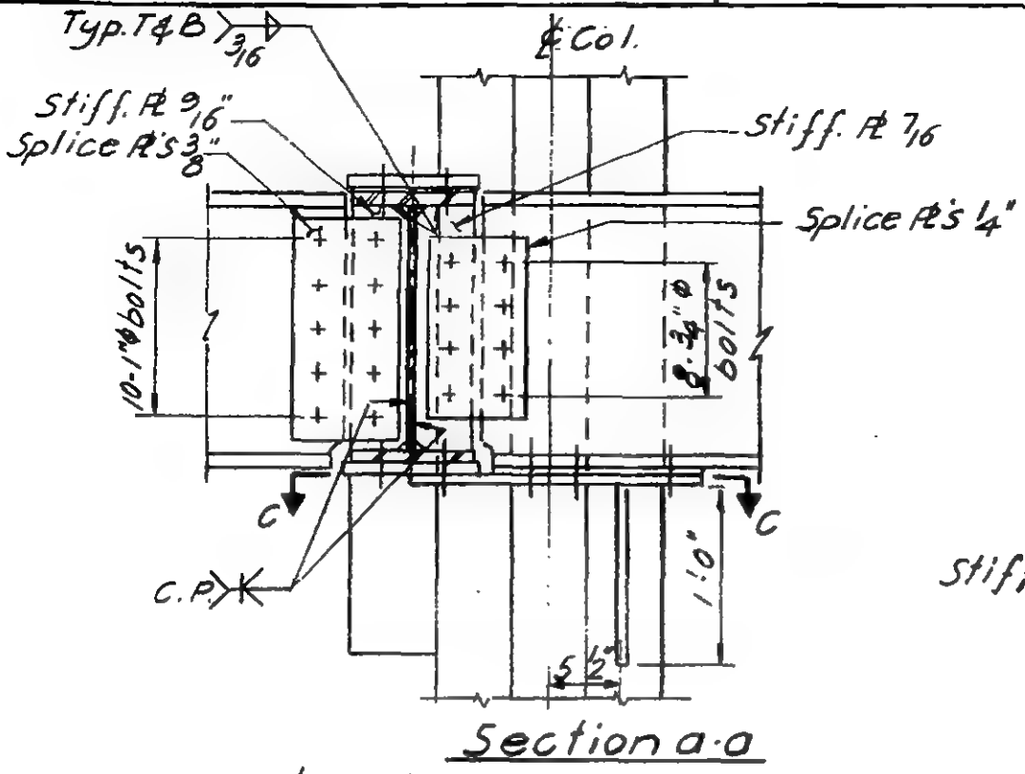

Section a-a

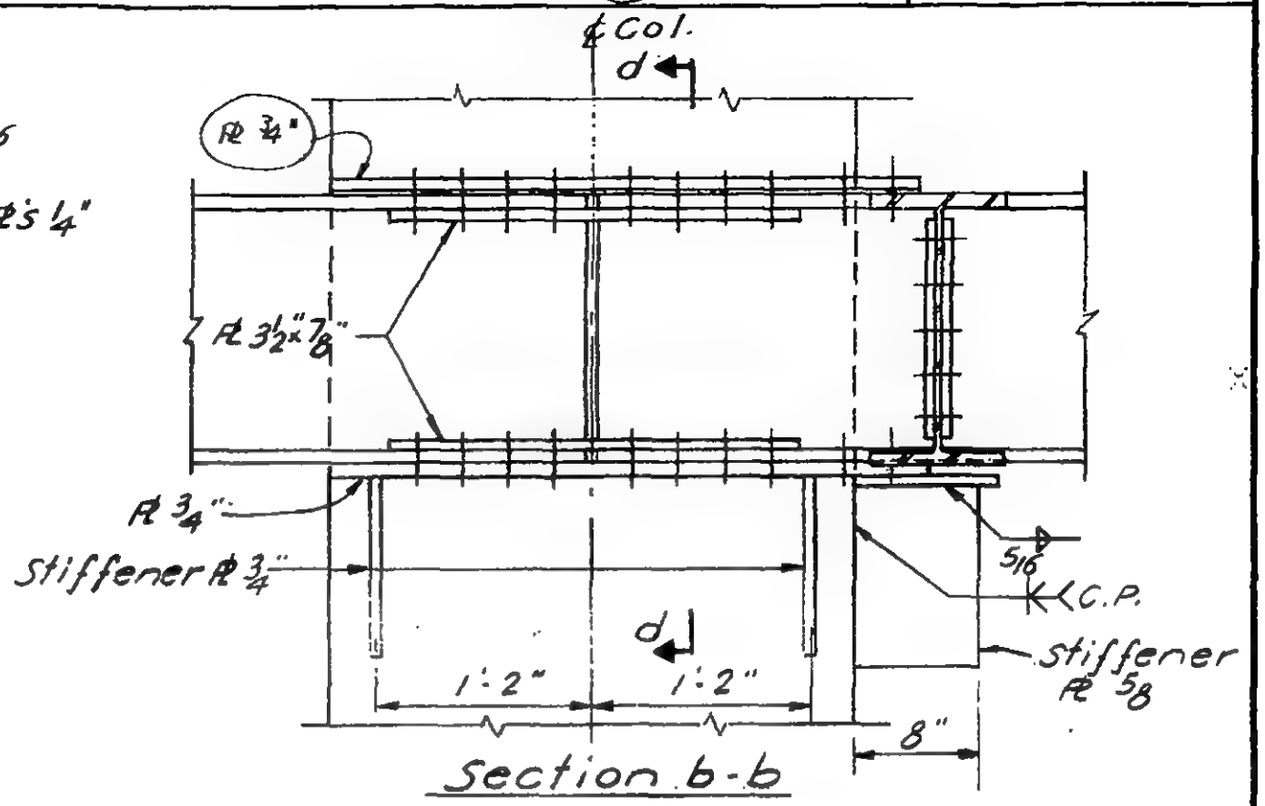

Section b-b

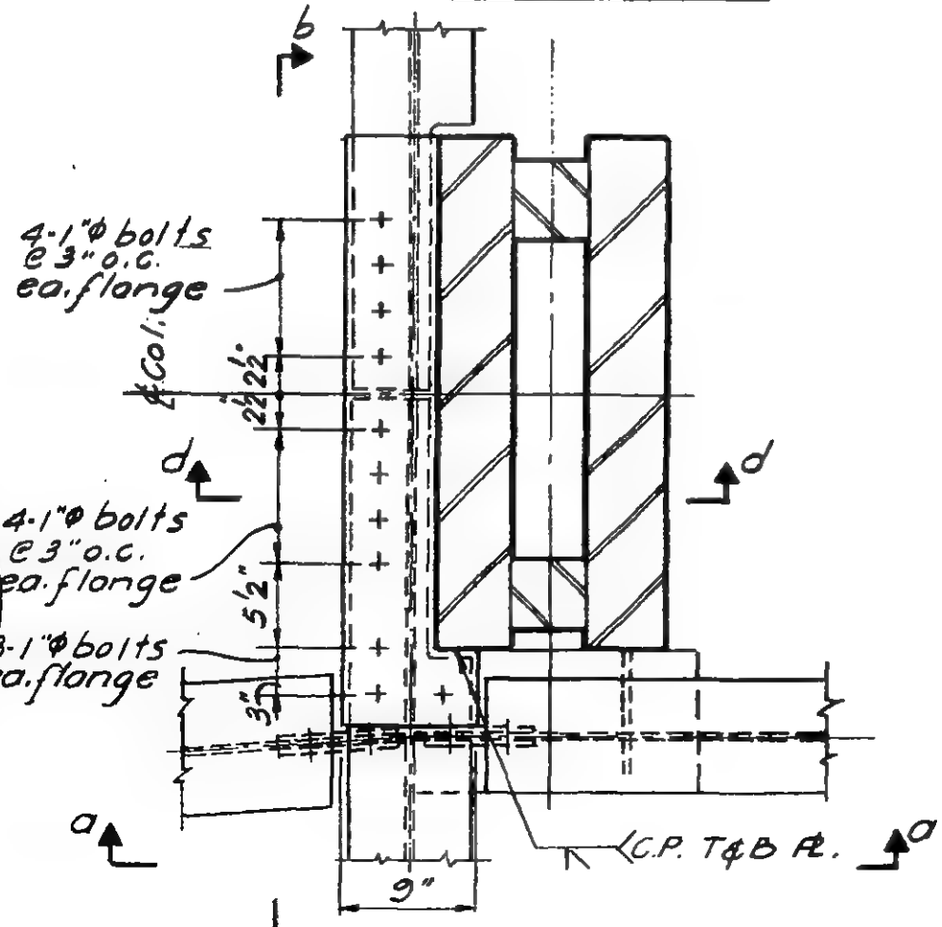

Plan

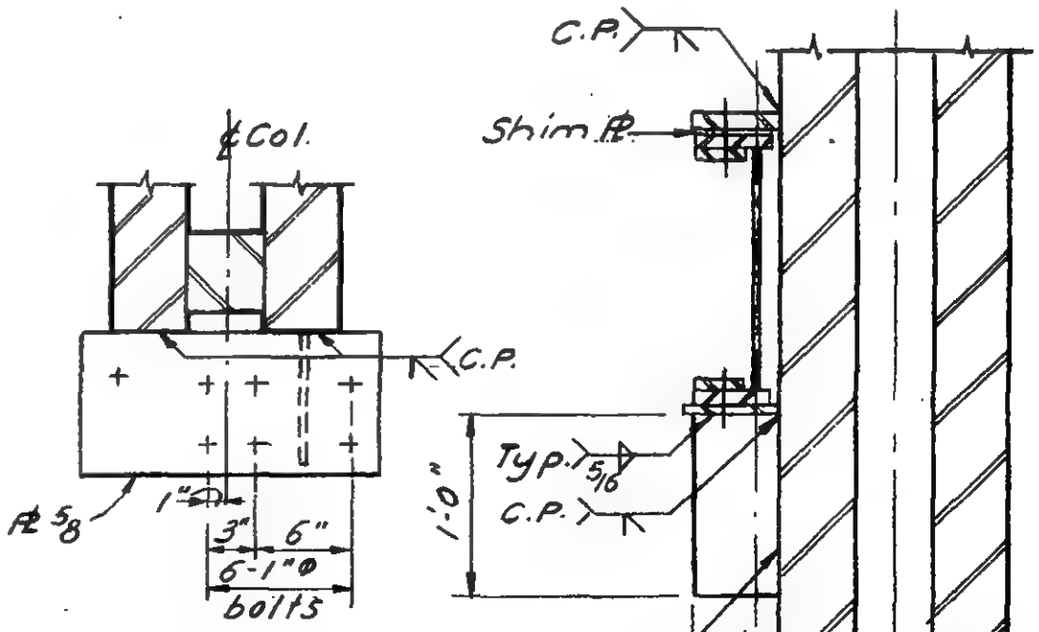

Section c-c

Section d-d

LICENSED PROFESSIONAL ENGINEER — LESLIE E. ROBERTSON — No. 34360 — UNIVERSITY OF THE STATE OF NEW YORK

6-ABS-82

SKILLING - HELLE - CHRISTIANSEN - ROBERTSON Structural & Civil Engineers

PROJECT THE WORLD TRADE CENTER | TITLE CONNECTION DETAIL 885(A) | DATE 9-29-67

REVISIONS

10-31-67

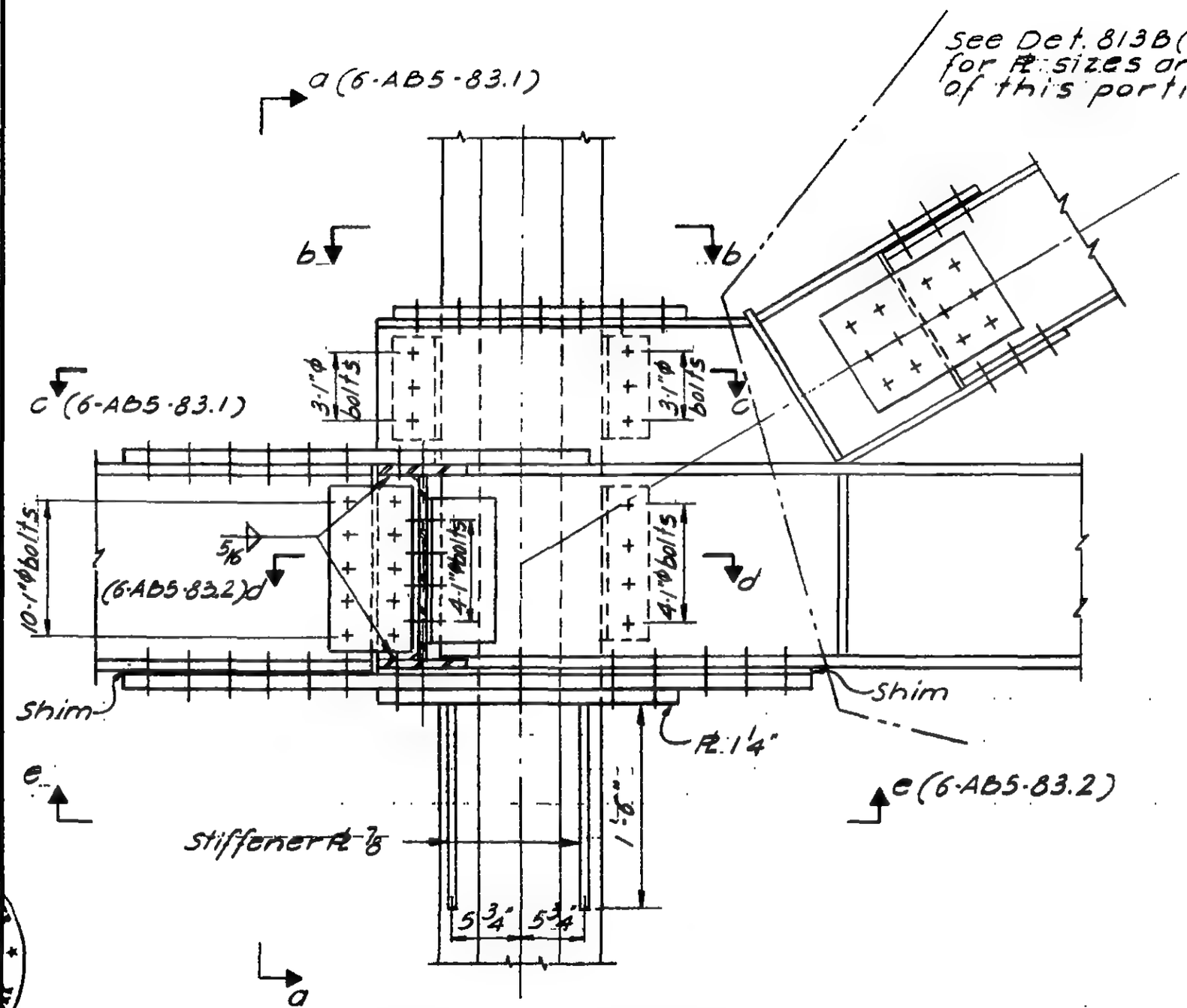

Elevation f-f
(See 6-AB5-83.1)

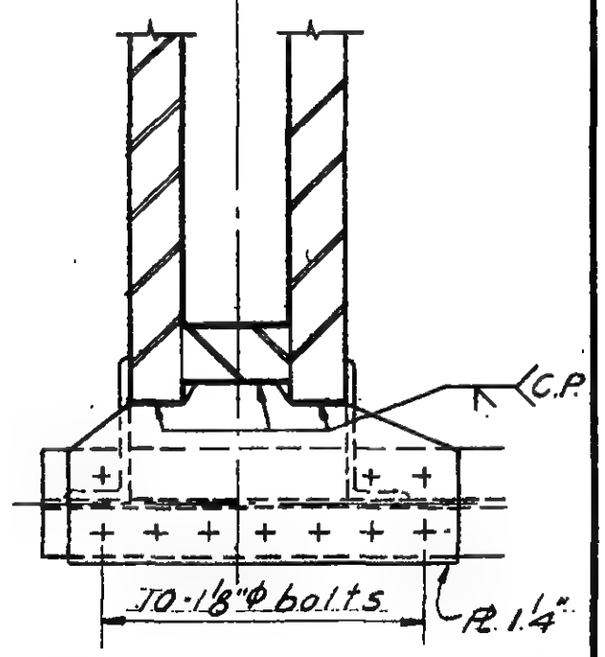

Section b-b

LICENSED PROFESSIONAL ENGINEER
LESLIE E. ROBERTSON
No. 34360
UNIVERSITY OF THE STATE OF NEW YORK

6-AB5-83

SKILLING - HELLE - CHRISTIANSEN - ROBERTSON Structural & Civil Engineers

PROJECT THE WORLD TRADE CENTER | TITLE CONNECTION DETAIL 885(A) | DATE 9-29-67

REVISIONS

10-31-67

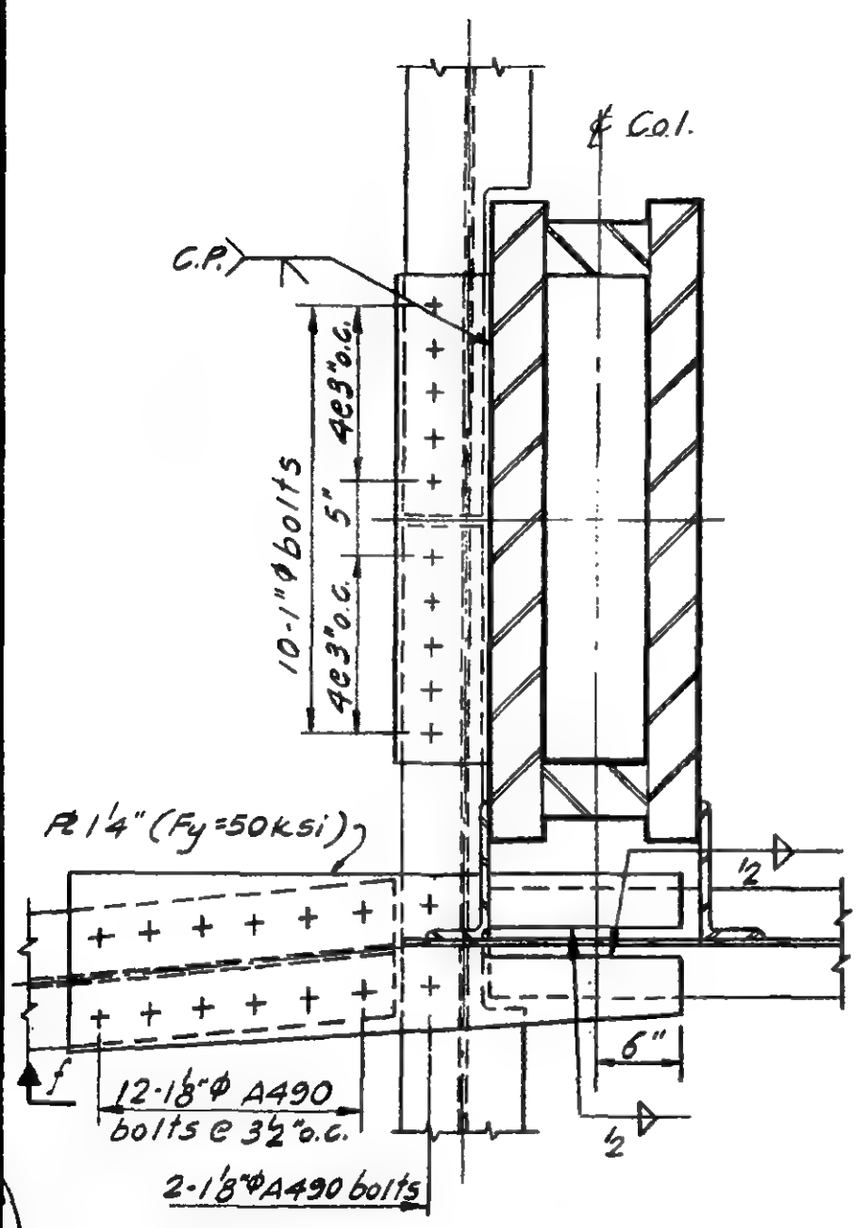

Section c-c

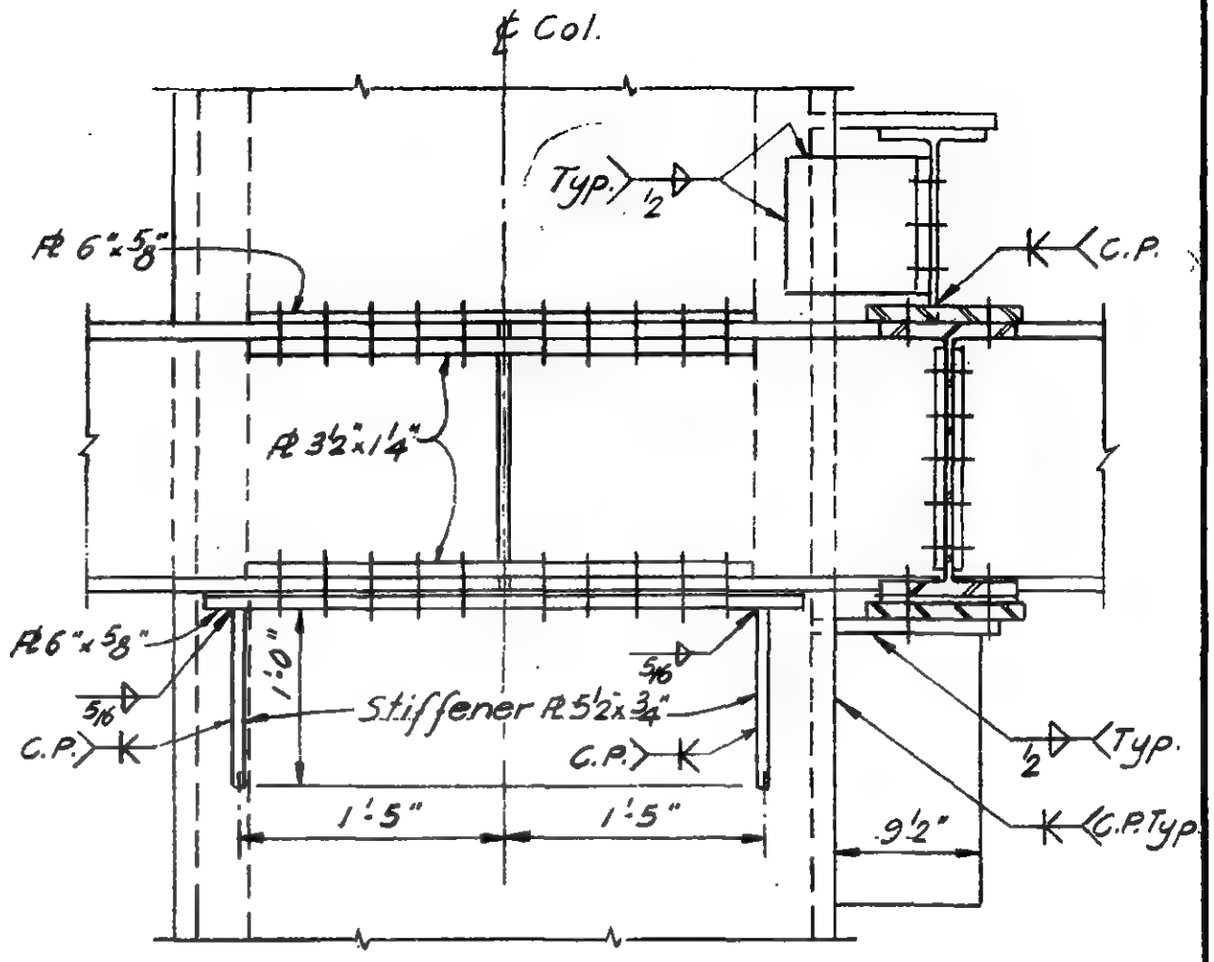

Elevation a-a

LICENSED PROFESSIONAL ENGINEER
LESLIE E. ROBERTSON
No. 34360
UNIVERSITY OF THE STATE OF NEW YORK

6-AB5-83.1

SKILLING - HELLE - CHRISTIANSEN - ROBERTSON Structural & Civil Engineers

PROJECT THE WORLD TRADE CENTER | TITLE CONNECTION DETAIL 885(A) | DATE 9-29-67

REVISIONS

10-31-67

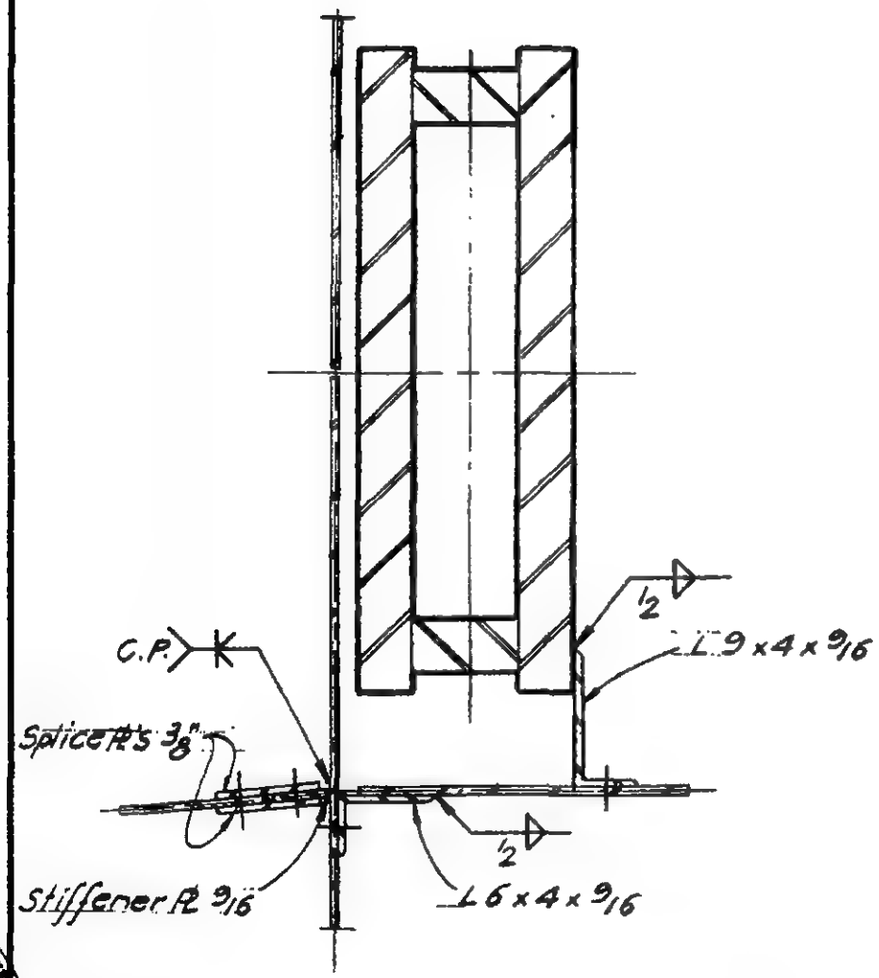

Section d-d

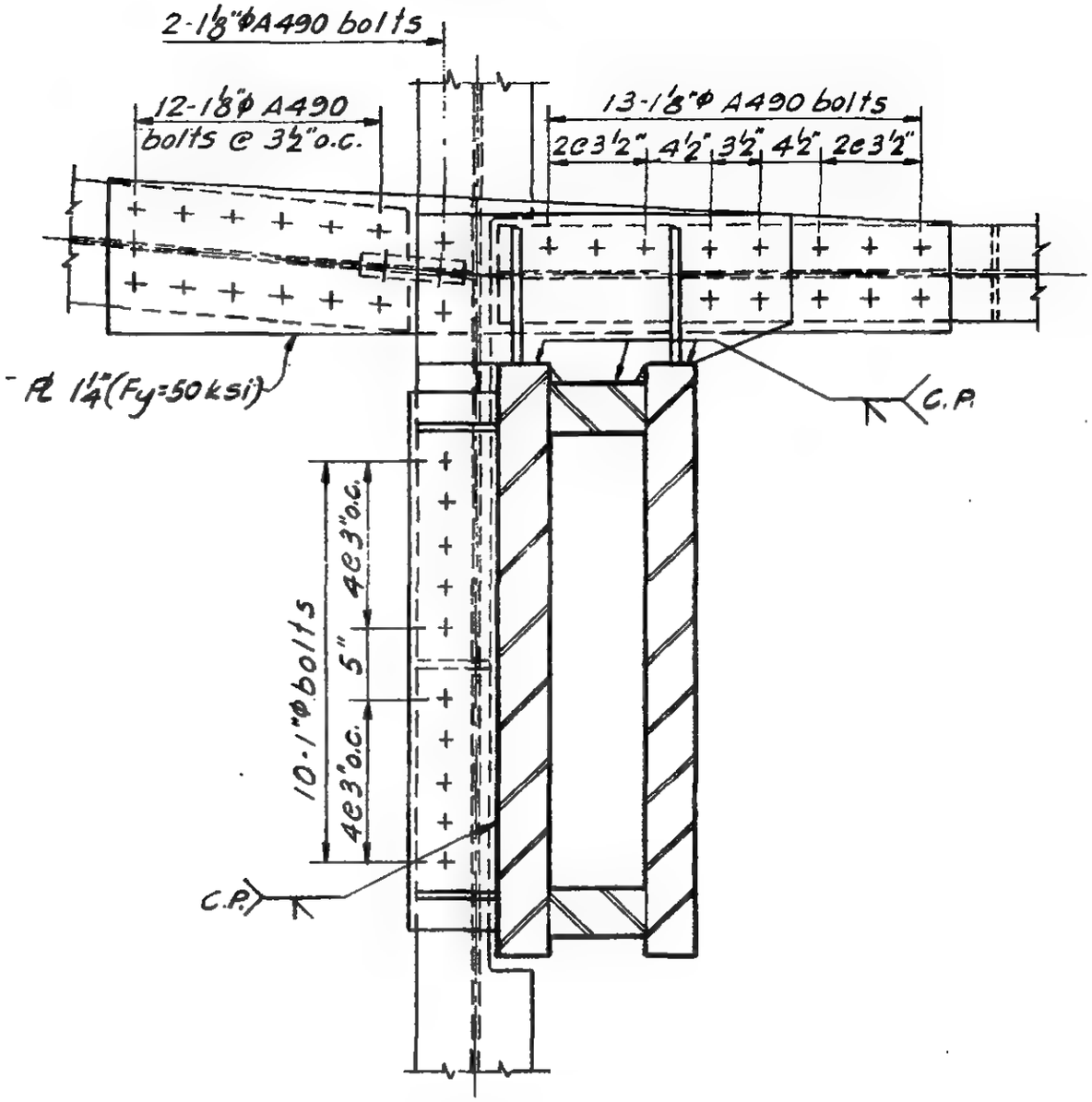

Section e-e

LICENSED PROFESSIONAL ENGINEER
LESLIE E. ROBERTSON
No. 34360
UNIVERSITY OF THE STATE OF NEW YORK

6-AB5-83.2

SKILLING - HELLE - CHRISTIANSEN - ROBERTSON Structural & Civil Engineers

PROJECT THE WORLD TRADE CENTER | TITLE CONNECTION DETAIL 886(A) | DATE 7-14-67

REVISIONS

9-29-67

10-31-67

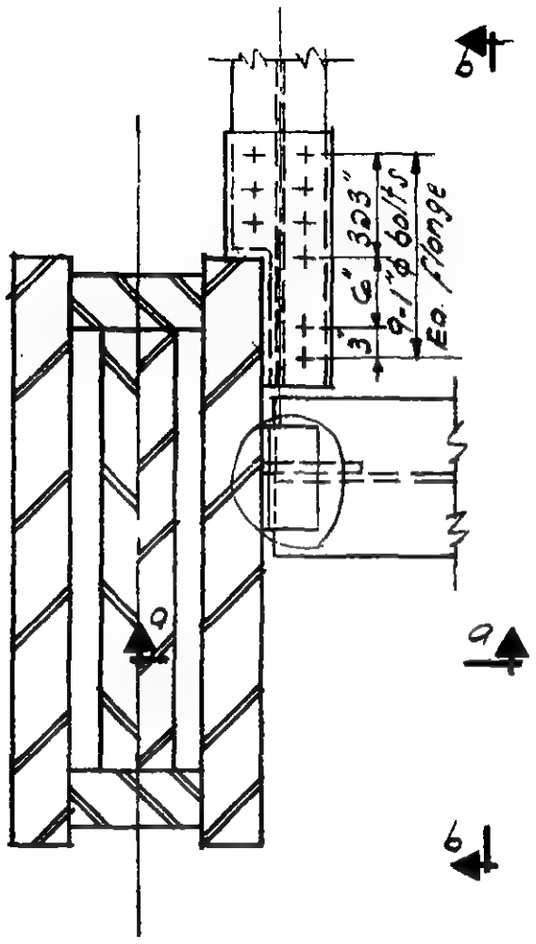

PLAN

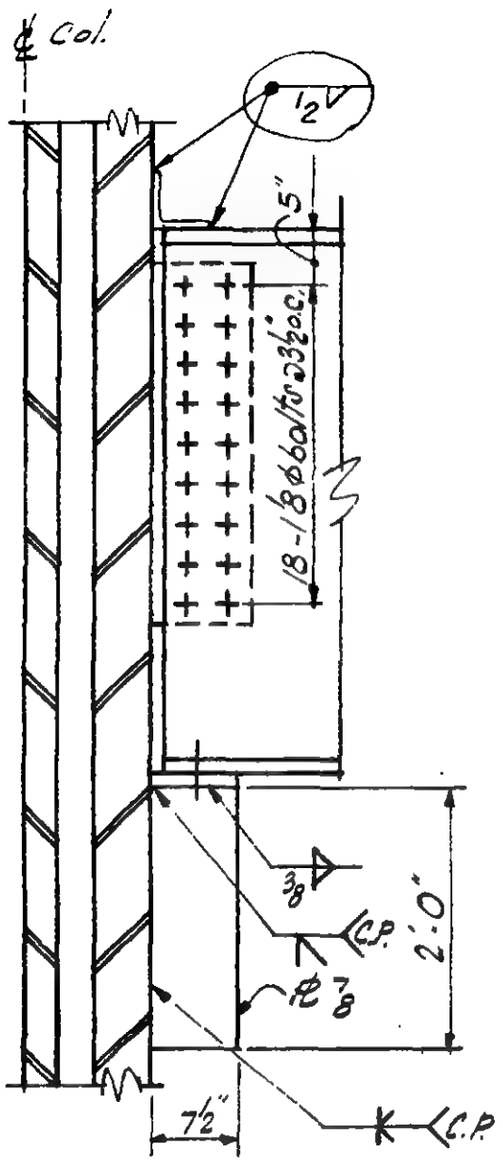

Section a-a

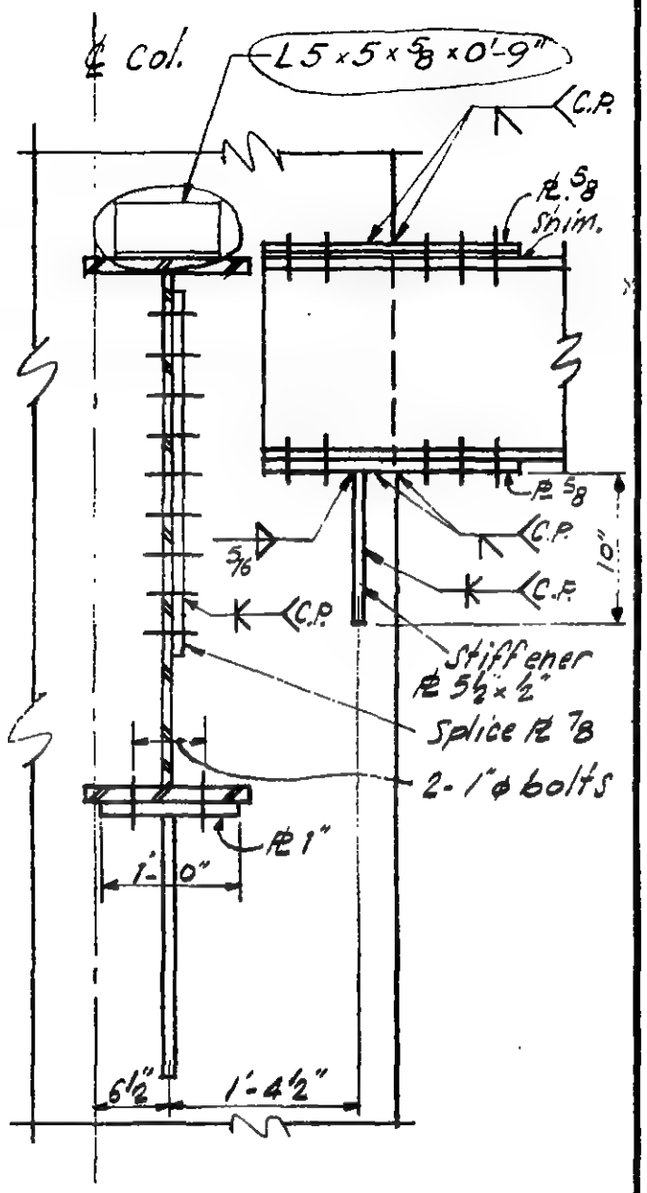

Section b-b

LICENSED PROFESSIONAL ENGINEER
LESLIE E. ROBERTSON
No. 34360
UNIVERSITY OF THE STATE OF NEW YORK

6-A85-84

SKILLING - HELLE - CHRISTIANSEN - ROBERTSON — Structural & Civil Engineers

PROJECT THE WORLD TRADE CENTER | TITLE CONNECTION DETAIL 887A | DATE 9-29-67

REVISIONS

12-21-67

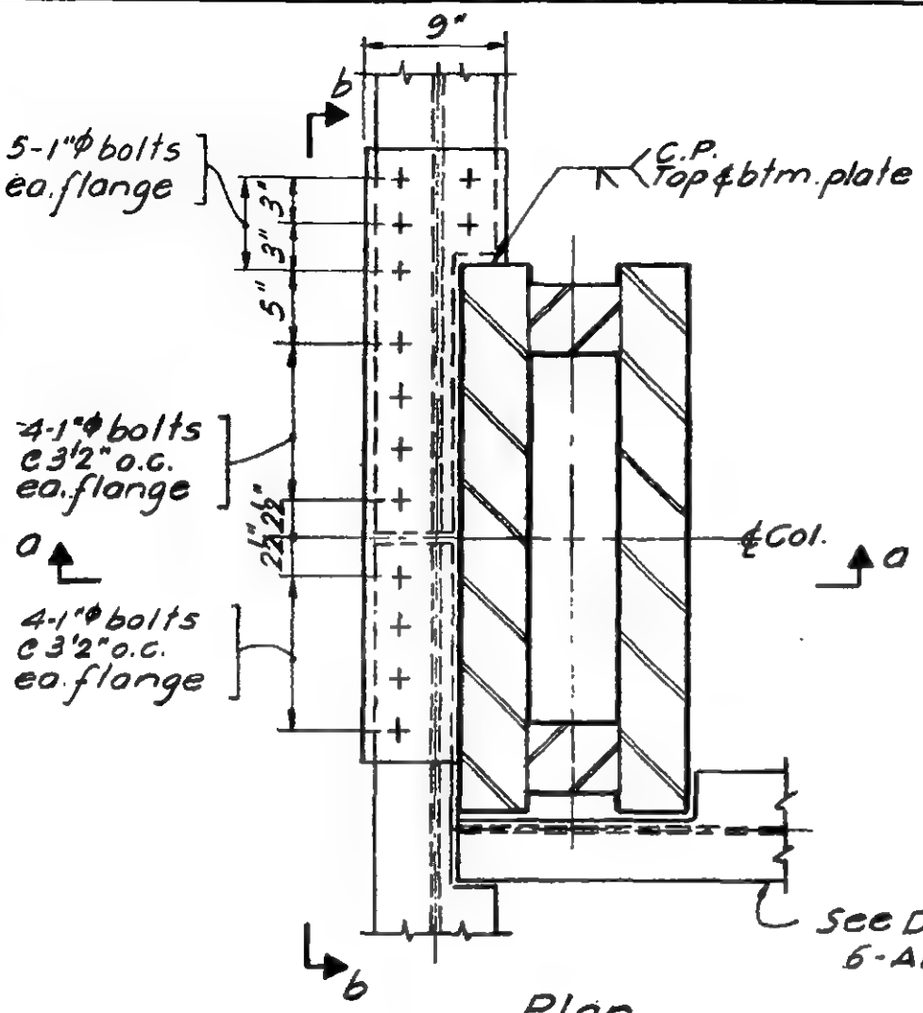

Plan

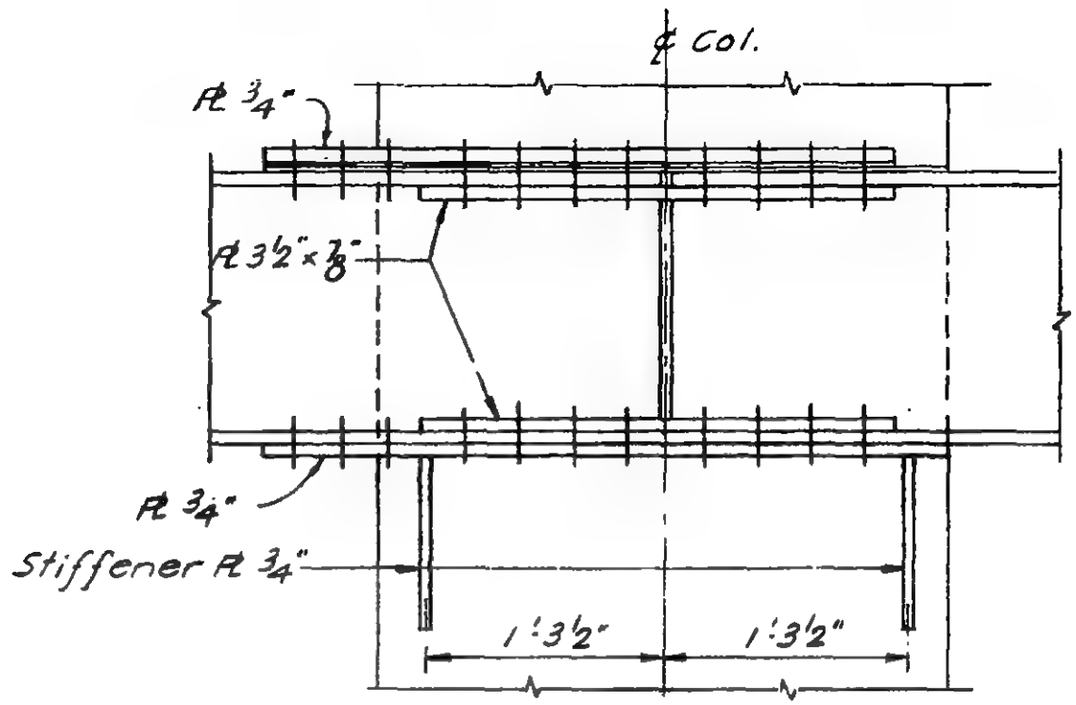

Section b-b

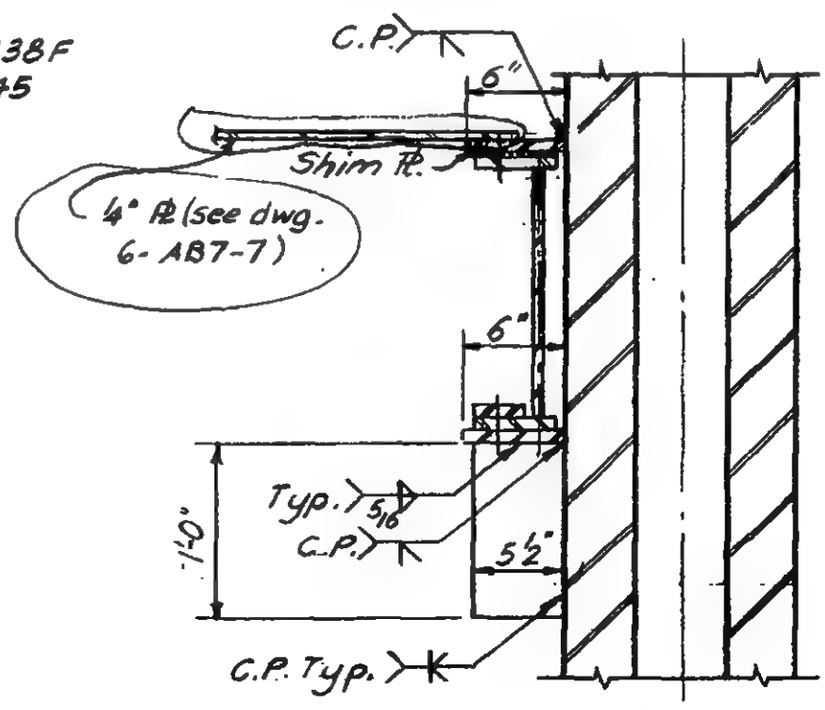

Section a-a

LICENSED PROFESSIONAL ENGINEER
LESLIE E. ROBERTSON
No. 34360
UNIVERSITY OF THE STATE OF NEW YORK

6-AB5-85

WORTHINGTON, SKILLING, HELLE & JACKSON — Civil & Structural Engineers

PROJECT: THE WORLD TRADE CENTER | TITLE: BRACING OF CANT. BEAMS ON 2ND FLOOR | DATE: 7-14-67

REVISIONS

10-31-67

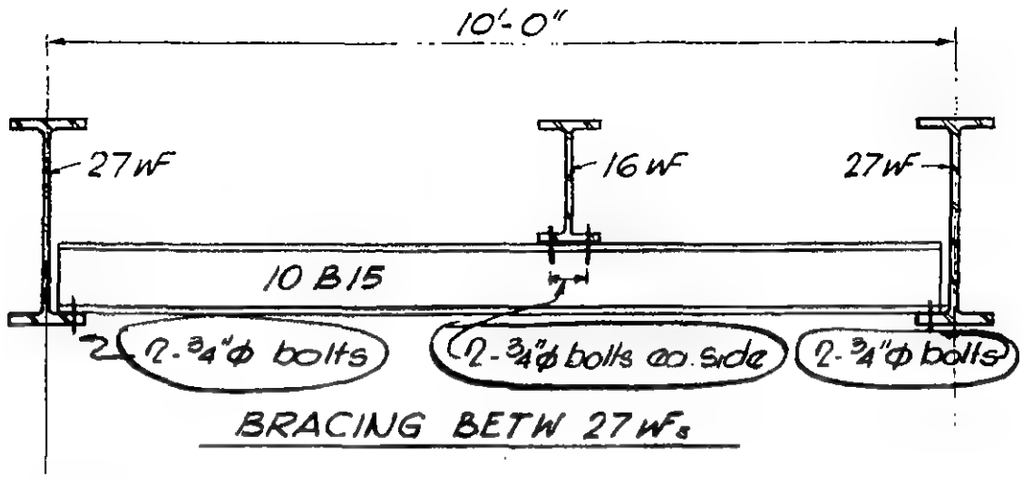

BRACING BETW 27 WFs

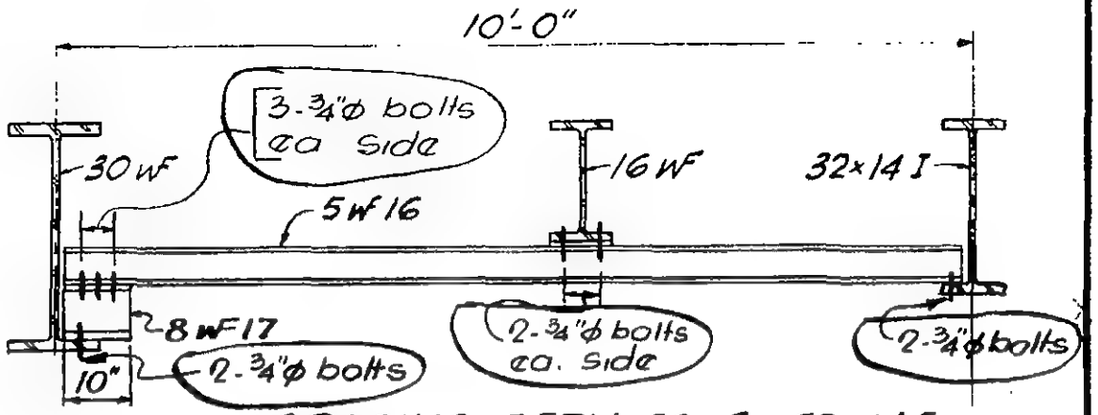

BRACING BETW 30 WF & 32x14 I

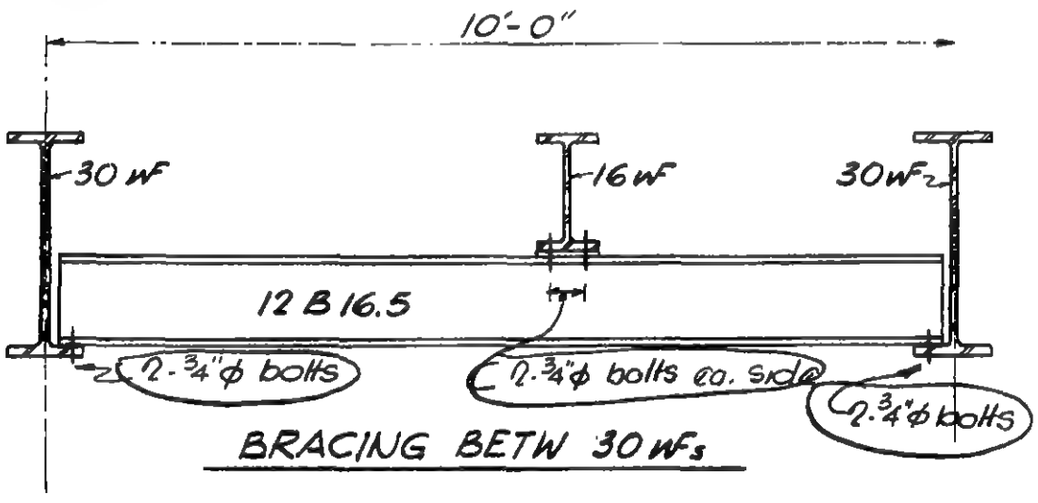

BRACING BETW 30 WFs

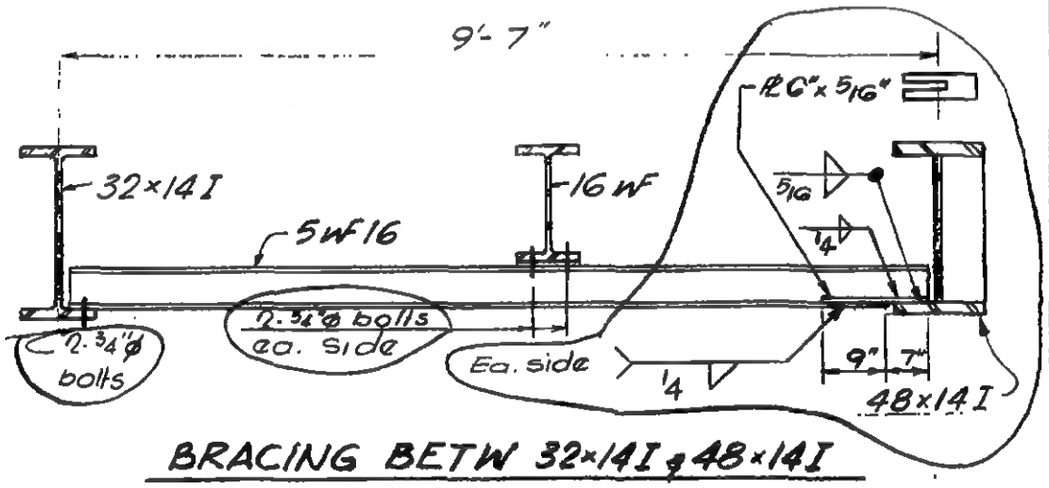

BRACING BETW 32x14 I & 48x14 I

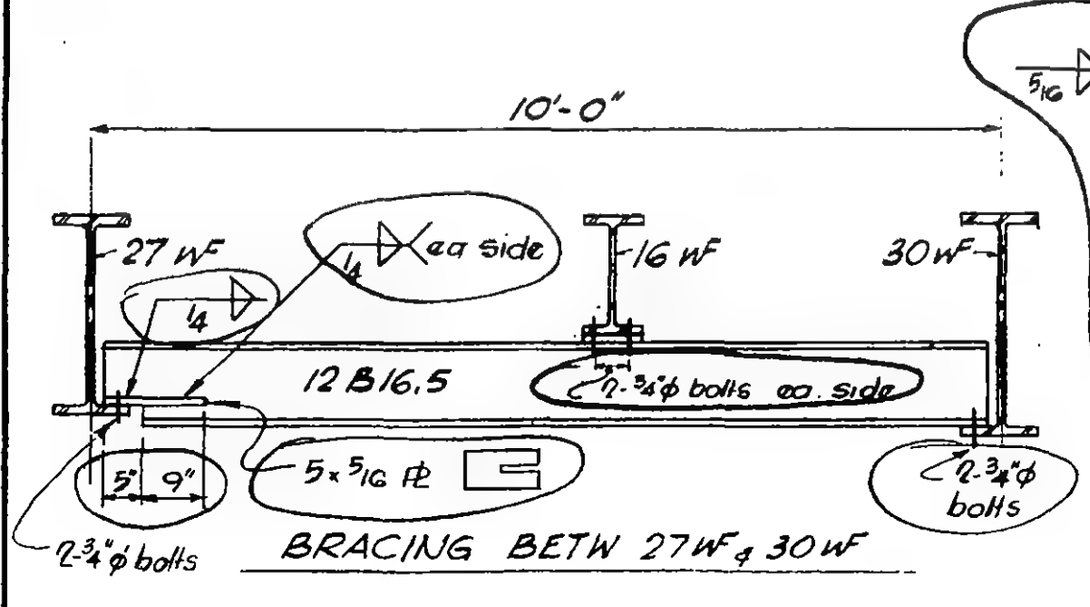

BRACING BETW 27 WF & 30 WF

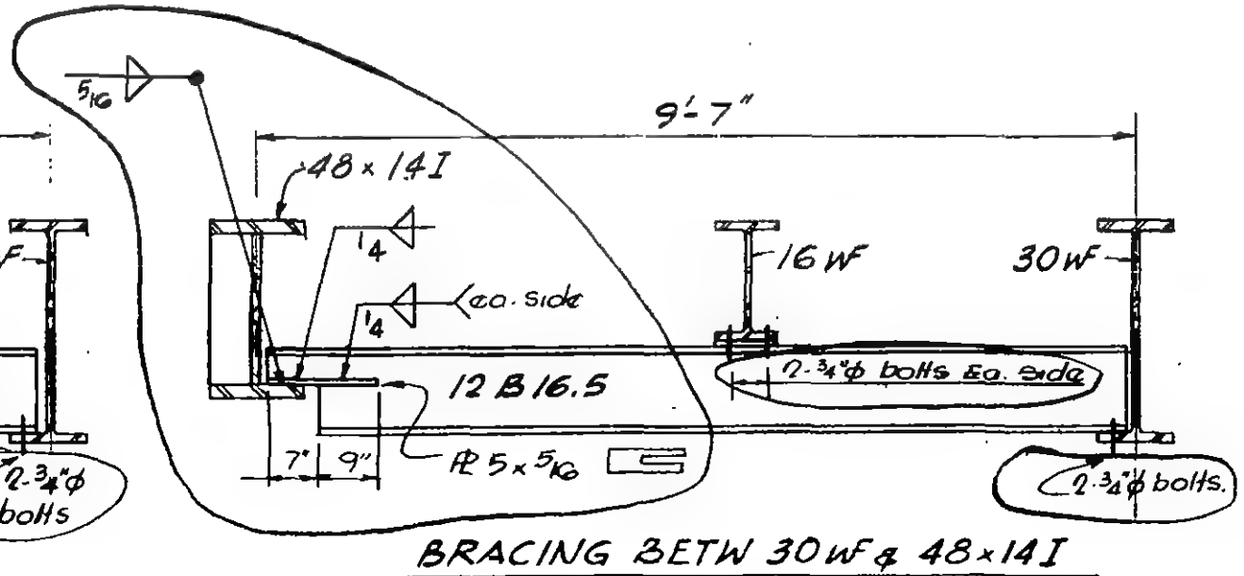

BRACING BETW 30 WF & 48 x 14 I

LICENSED PROFESSIONAL ENGINEER — LESLIE E. ROBERTSON — No. 34360 — STATE OF NEW YORK

6-AB5-86

SKILLING - HELLE - CHRISTIANSEN - ROBERTSON Structural & Civil Engineers

PROJECT THE WORLD TRADE CENTER | TITLE BRACING OF CANT BEAMS ON 2ND FLOOR | DATE 10-31-67

REVISIONS

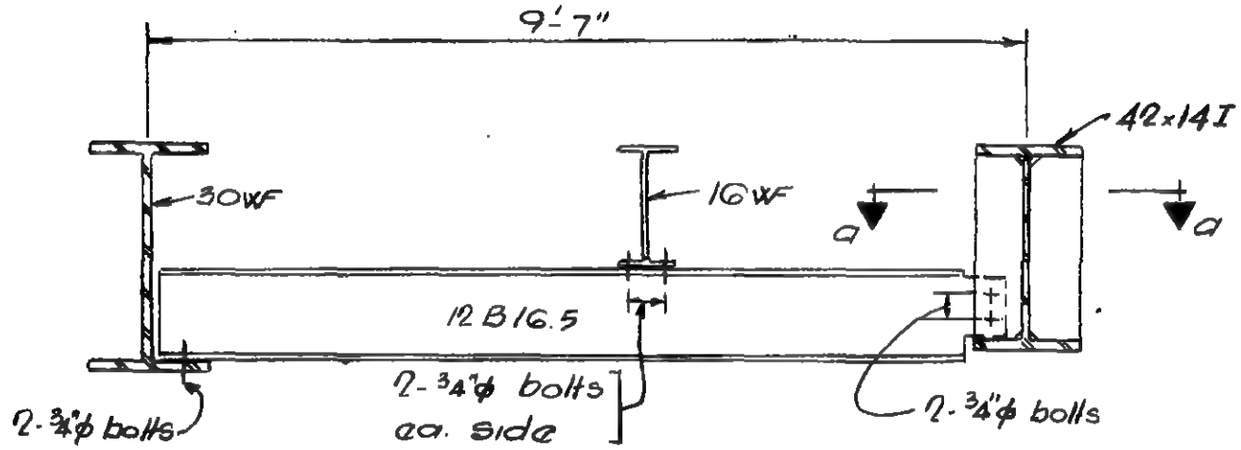

Bracing betw. 30WF & 42x141

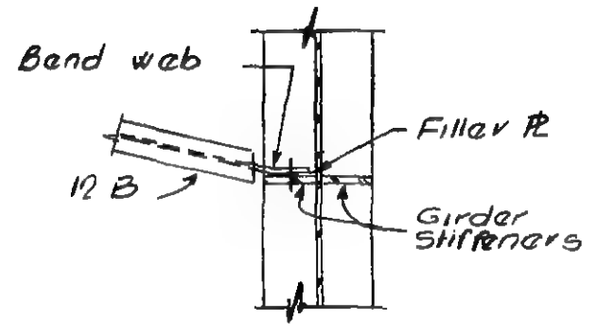

Section a-a

G-AB5-86.1

SKILLING - HELLE - CHRISTIANSEN - ROBERTSON Structural & Civil Engineers

PROJECT THE WORLD TRADE CENTER | TITLE COLUMN REINF AT BRACING COL: 501, 508, 1001, 1008 | DATE 8.14.67

REVISIONS
9-29-67

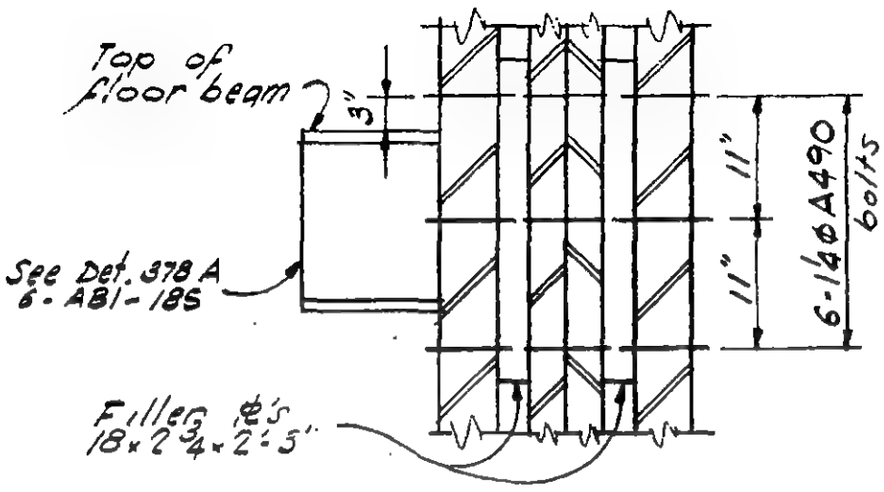

Section a-a

El. 344'-0"
El. 355'-6"
El. 378'-6"

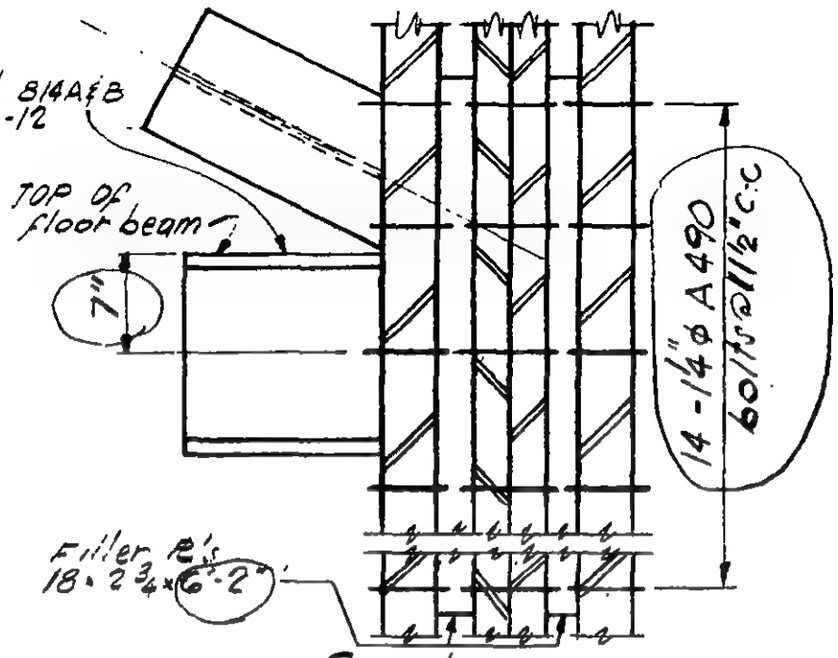

Section a-a

El. 332'-0"

(1008)
(1001)
(508)
(501)

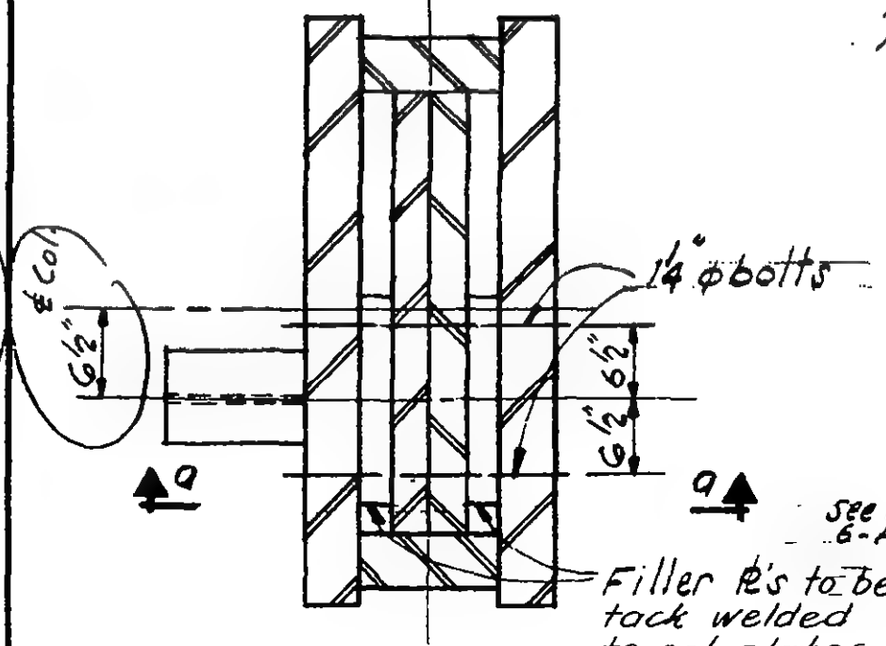

PLAN

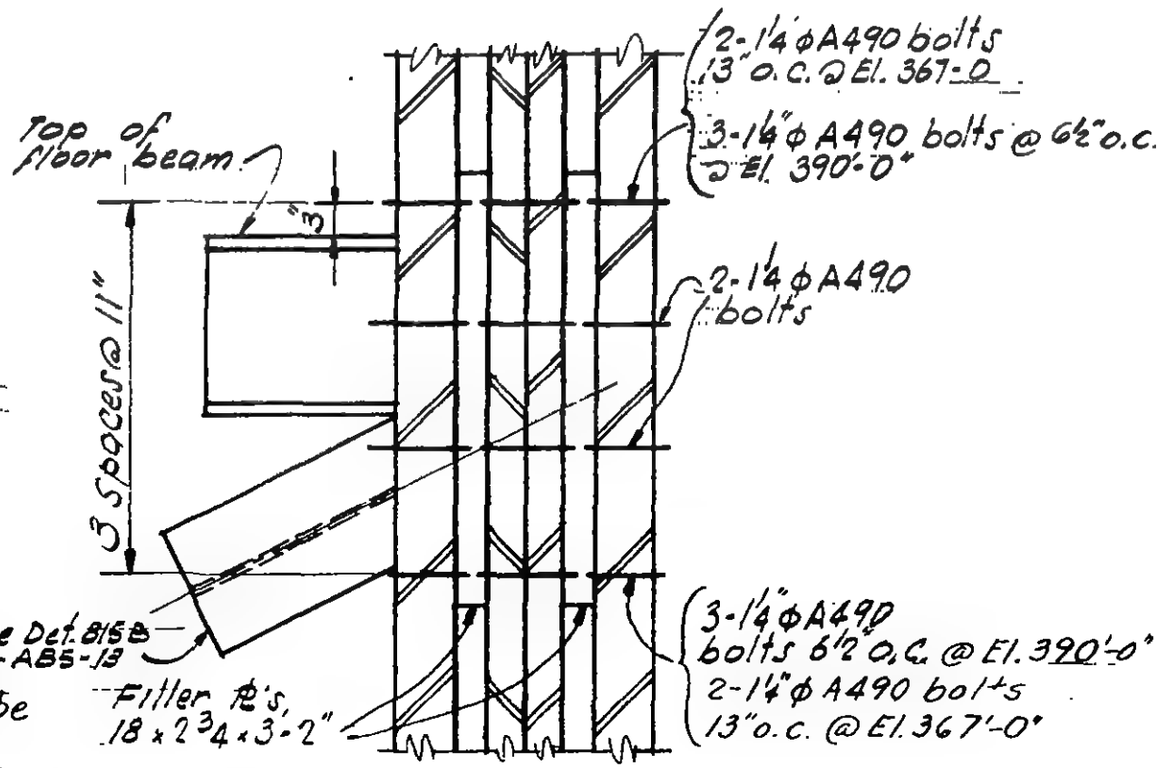

Section a-a

El. 390'-0" & El. 367'-0"

LICENSED PROFESSIONAL ENGINEER
LESLIE E. ROBERTSON
No. 34360
UNIVERSITY OF THE STATE OF NEW YORK

6-AB5-87

SKILLING - HELLE - CHRISTIANSEN - ROBERTSON — Structural & Civil Engineers

PROJECT THE WORLD TRADE CENTER | TITLE COL. REINF. AT BRACING 502, 507, 1002 & 1007 | DATE 8-14-67

REVISIONS

9-29-67

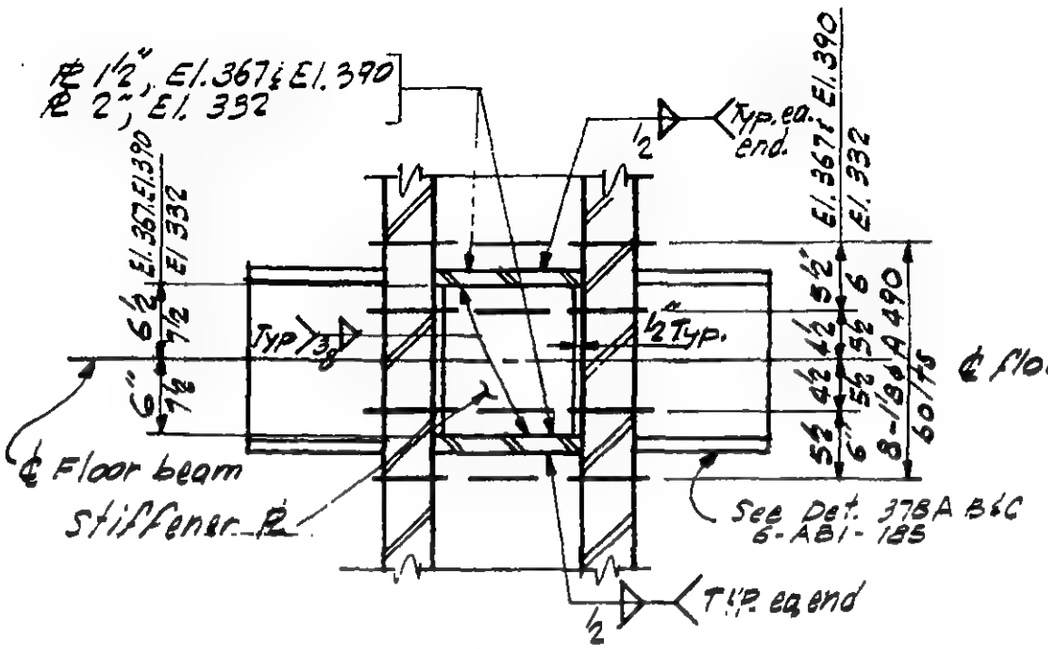

Section a-a
El. 332

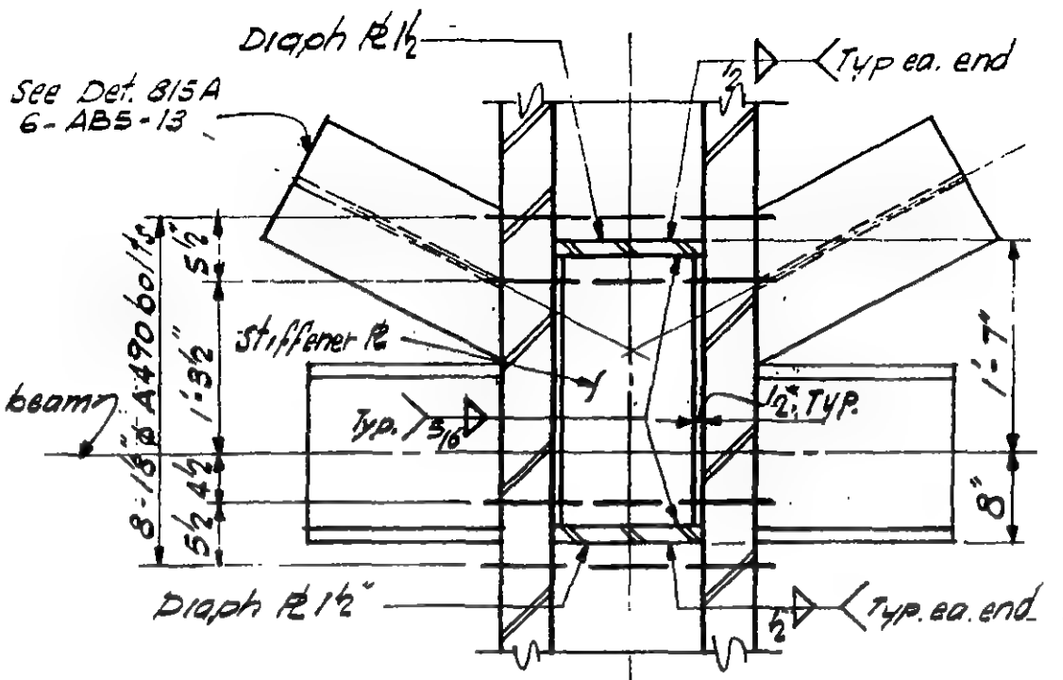

Section a-a
El. 355'-6"
El. 378'-6"

(1007) (1002) (507) (502)

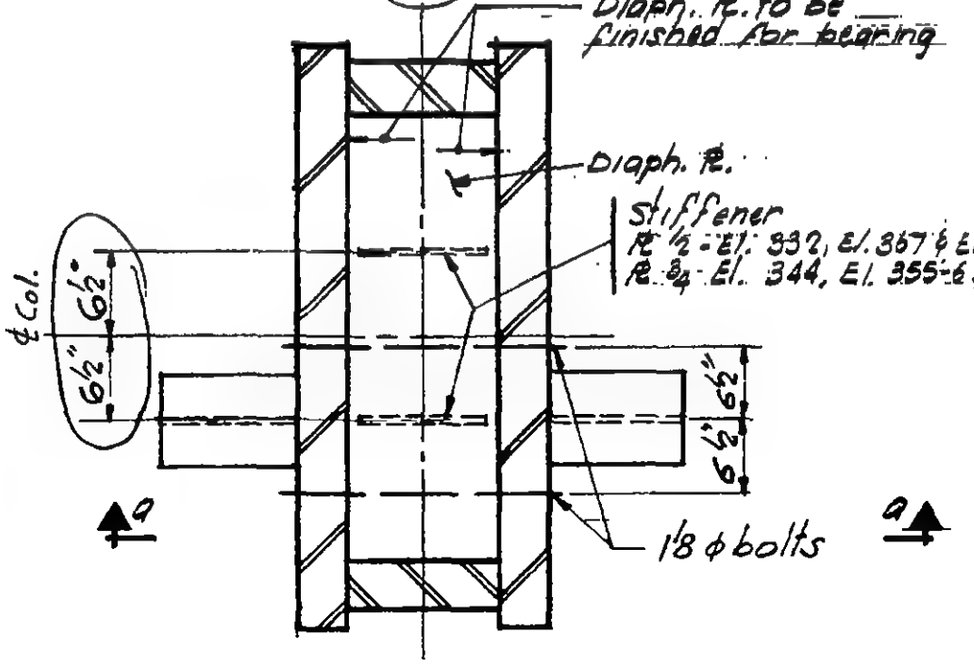

0-2-V

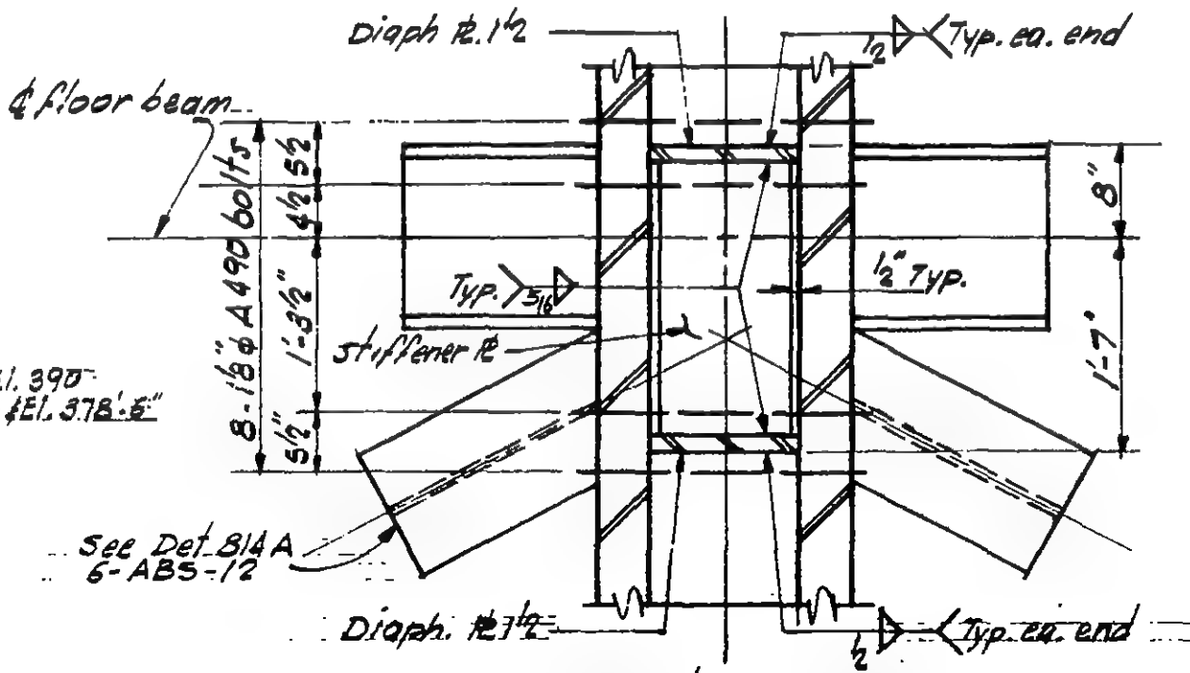

Section a-a
El. 344

6-AB5-88

SKILLING - HELLE - CHRISTIANSEN - ROBERTSON Structural & Civil Engineers

PROJECT THE WORLD TRADE CENTER | TITLE COLUMN REINF. AT BRACING COL. 504 & 1005 | DATE 8-14-67

REVISIONS

9-29-67

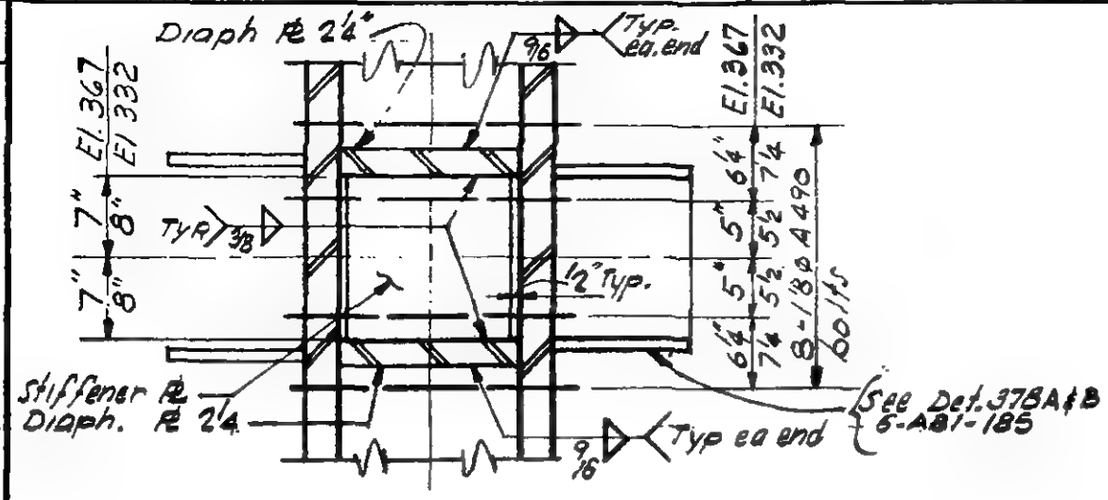

Section a-a

El. 332'
El. 367'

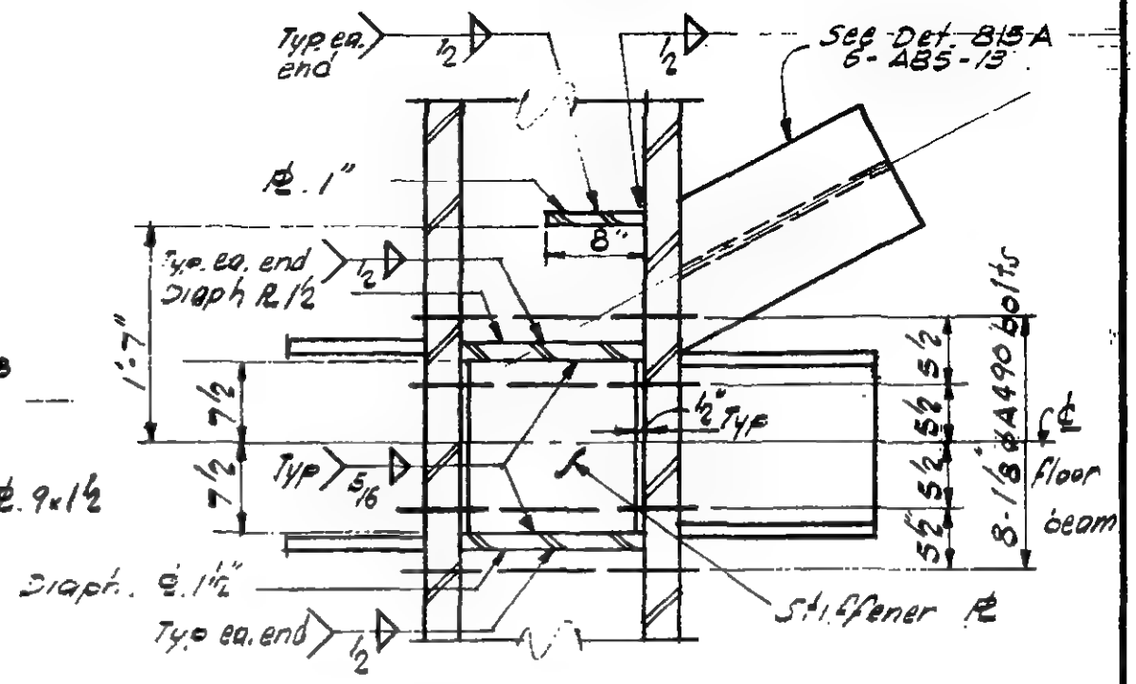

Section a-a

El. 355'-6"
El. 378'-0"

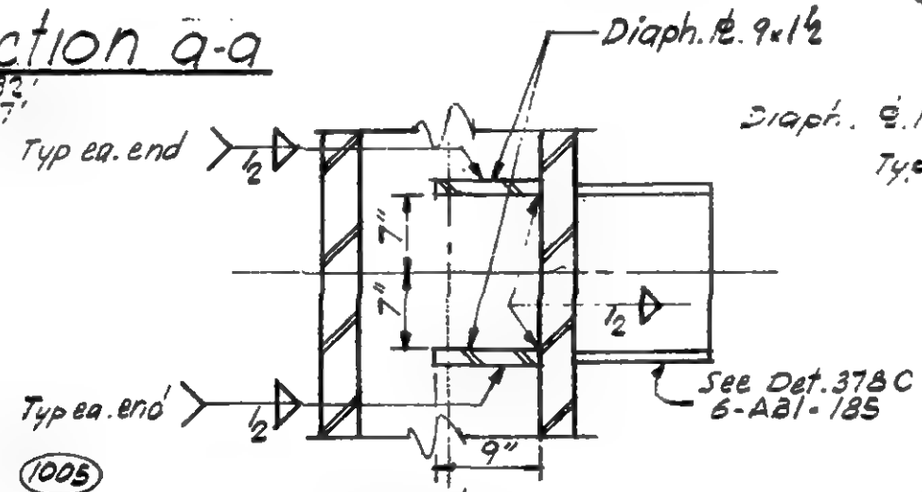

Section a-a

El. 390

(1005)
(504)

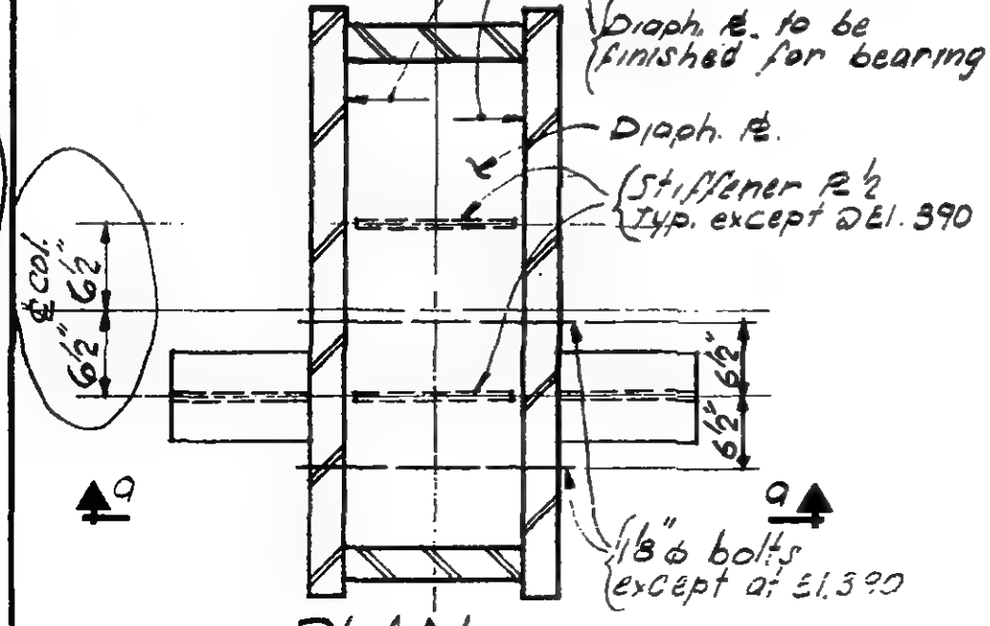

PLAN

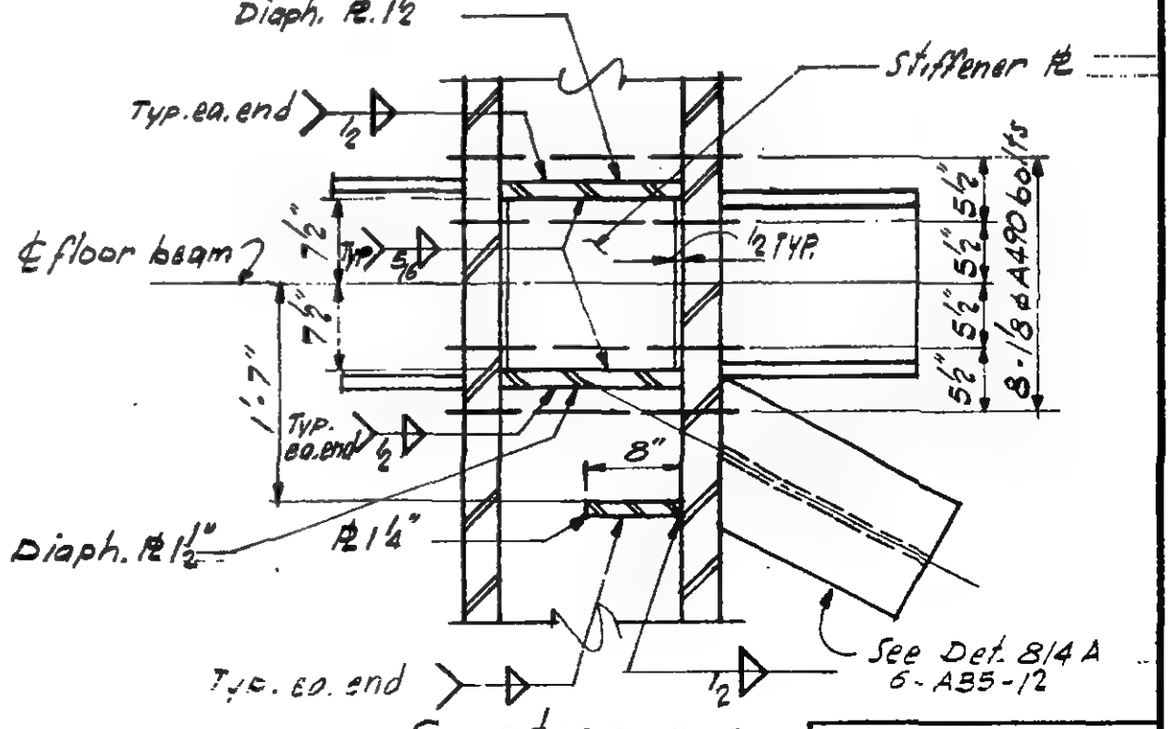

Section a-a

El. 344'-0"

6-AB5-89

LICENSED PROFESSIONAL ENGINEER
LESLIE E. ROBERTSON
No. 34360
UNIVERSITY OF THE STATE OF NEW YORK

SKILLING - HELLE - CHRISTIANSEN - ROBERTSON — Structural & Civil Engineers

PROJECT: THE WORLD TRADE CENTER | TITLE: COL. REINF. AT BRACING COL. 505 & 1004 | DATE: 8.14.67

REVISIONS
9-29-67

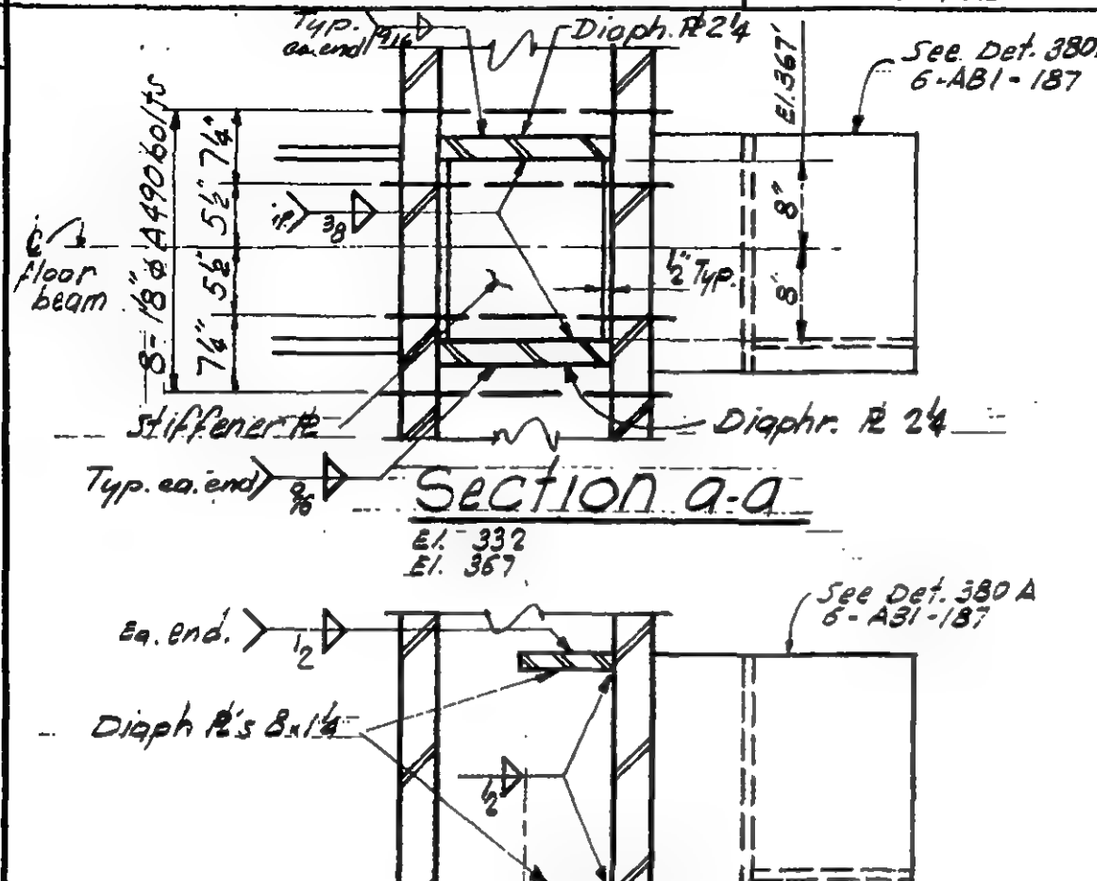

Section a-a
El. 332
El. 367

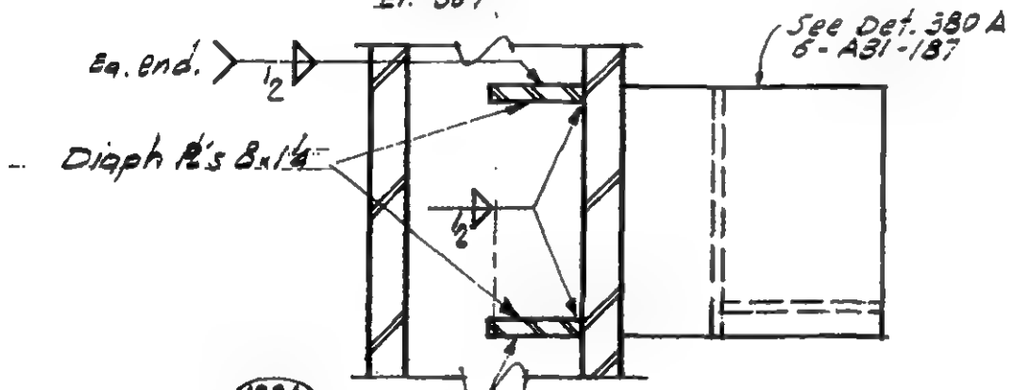

Section a-a
El. 390'

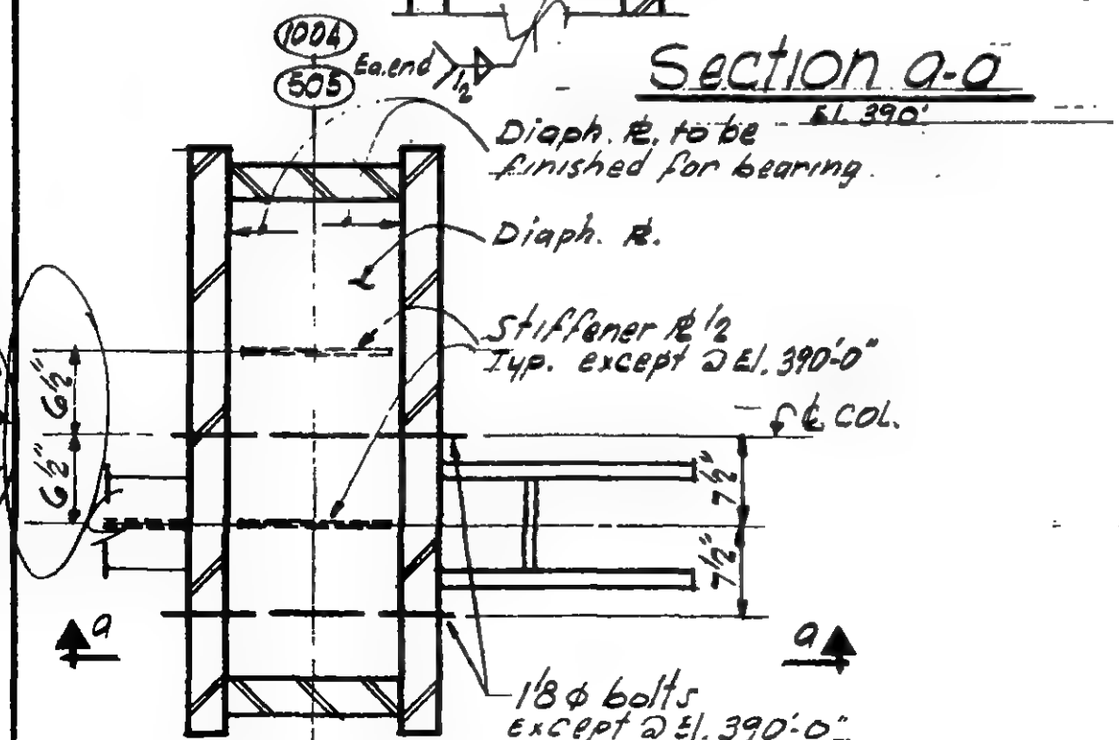

PLAN

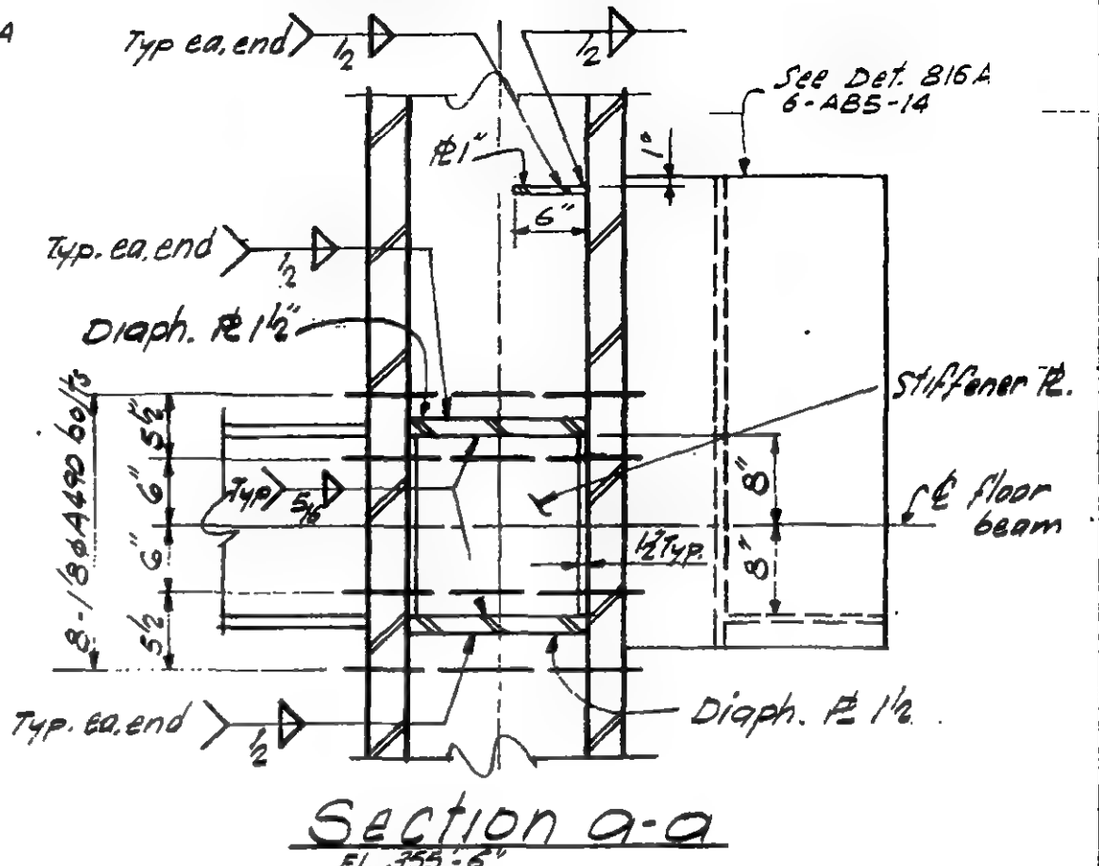

Section a-a
El. 355'-6"
El. 378'-6"

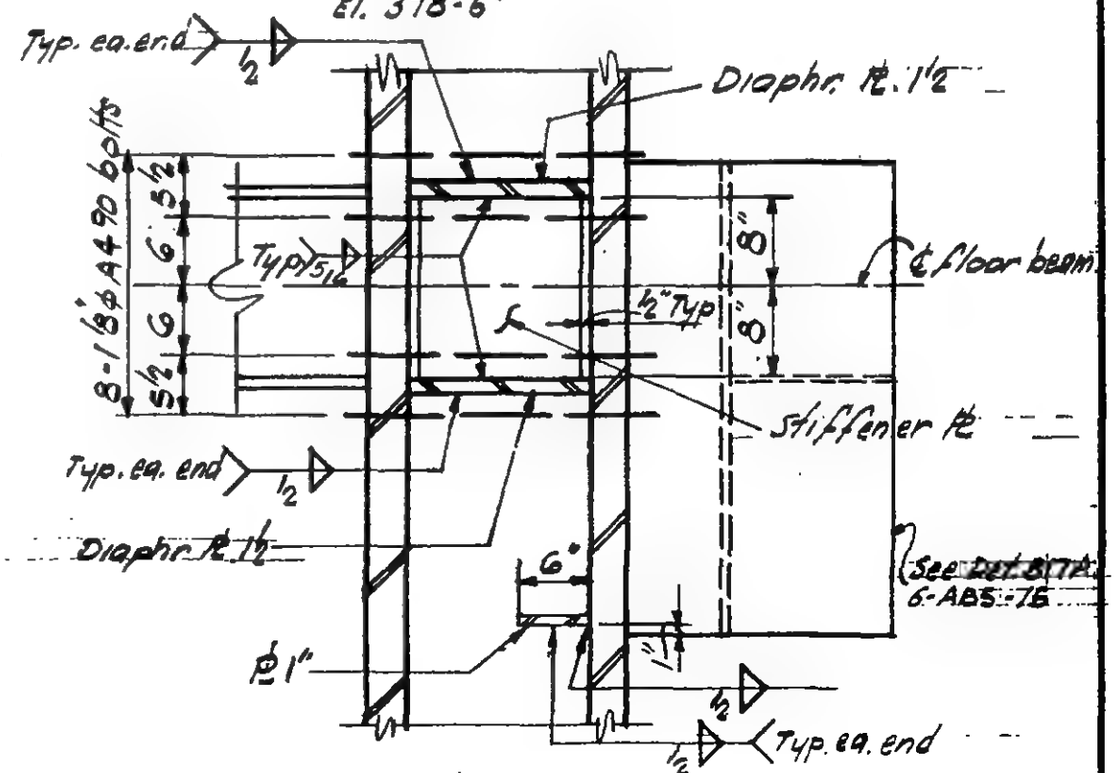

Section a-a
El. 344

6-AB5-90

LICENSED PROFESSIONAL ENGINEER
LESLIE E. ROBERTSON
No. 34360
OF THE STATE OF NEW YORK

SKILLING - HELLE - CHRISTIANSEN - ROBERTSON — Structural & Civil Engineers

PROJECT THE WORLD TRADE CENTER | TITLE COL. REINF. AT BRACING COL. 506 | DATE 8-14-67

REVISIONS
9-29-67

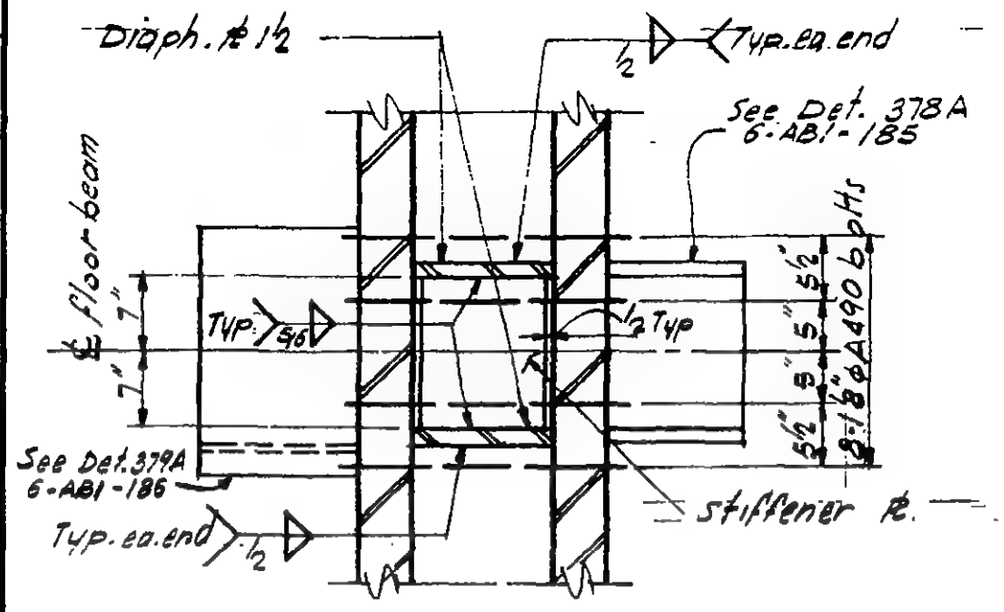

Section a-a

El. 344
El. 355'-6"
El. 378'-6"

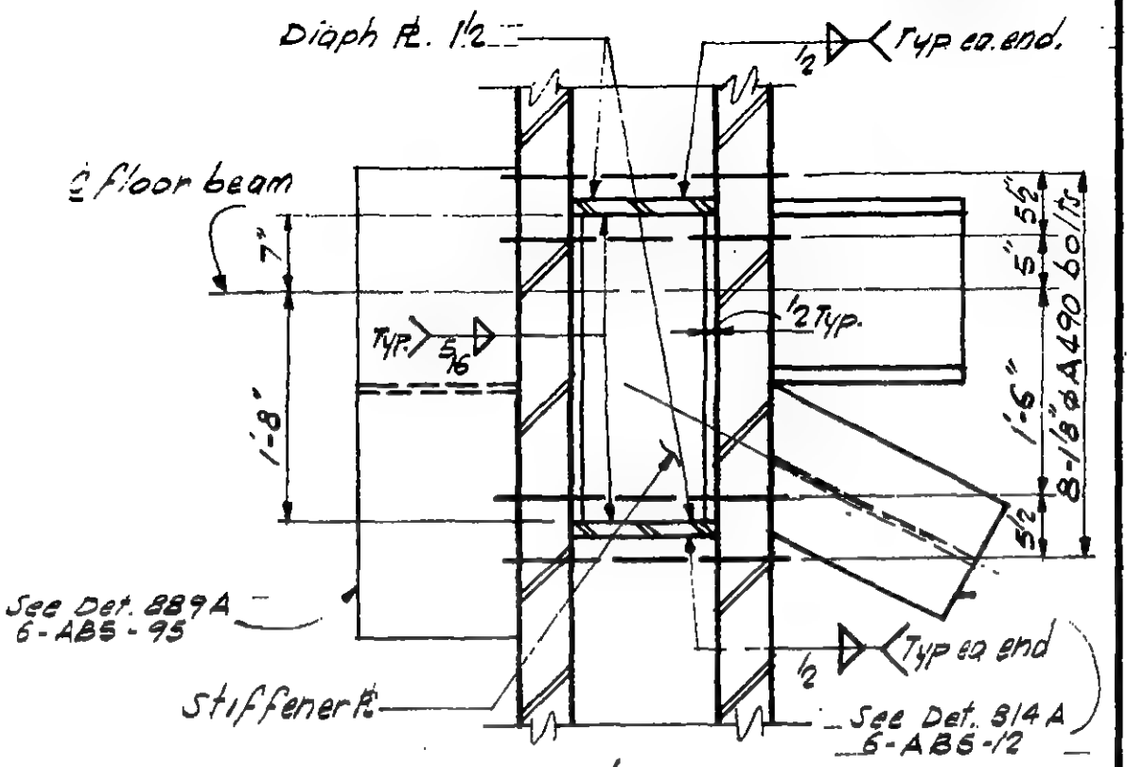

Section a-a

El. 367
El. 390

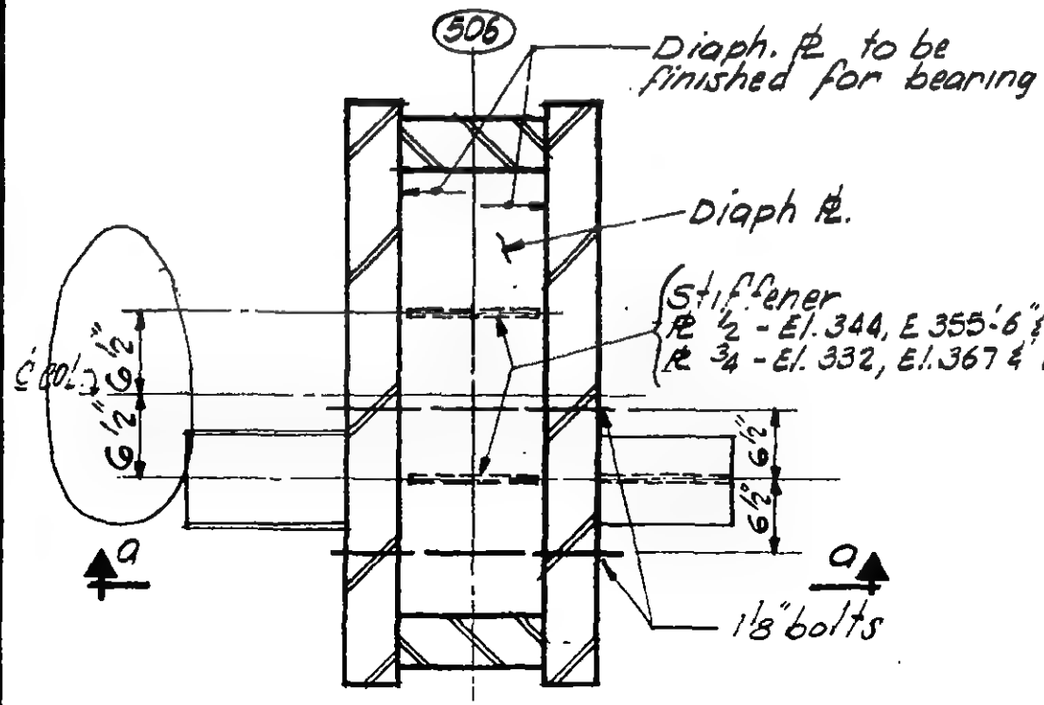

PLAN

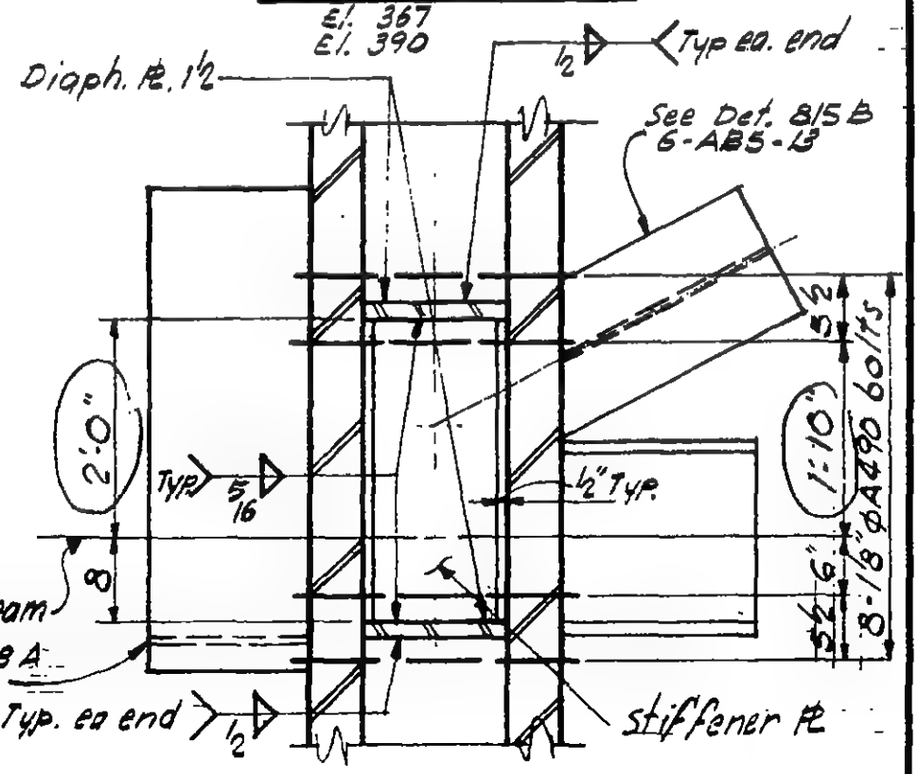

Section a-a

El. 332

6-AB5-91

LICENSED PROFESSIONAL ENG'NEER
LESLIE E. ROBERTSON
No. 34360
UNIVERSITY OF THE STATE OF NEW YORK

SKILLING - HELLE - CHRISTIANSEN - ROBERTSON — Structural & Civil Engineers

PROJECT THE WORLD TRADE CENTER | TITLE COLUMN REINFORCING AT BRACING. COL. 1003 | DATE 8-14-67

REVISIONS

9-29-67

(1003)

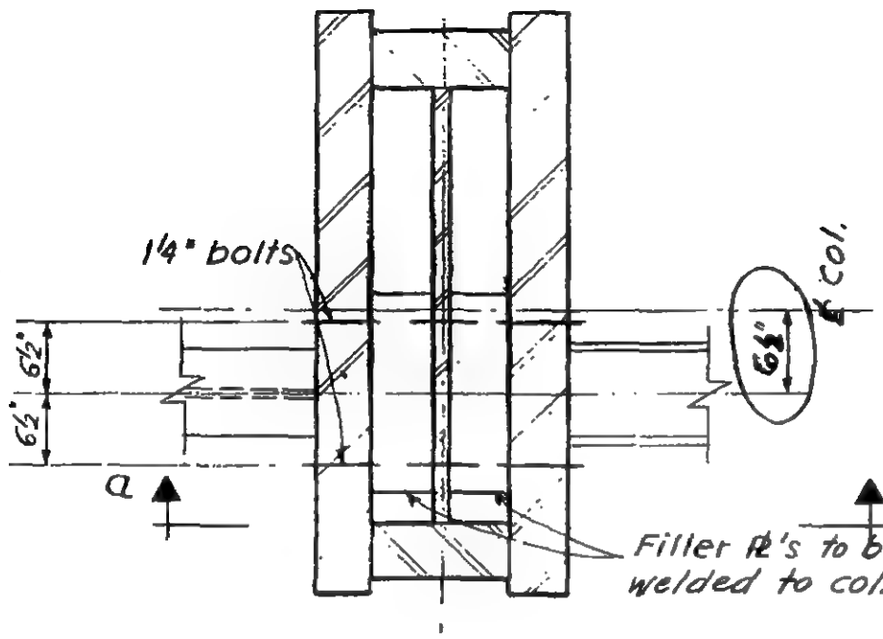

Plan

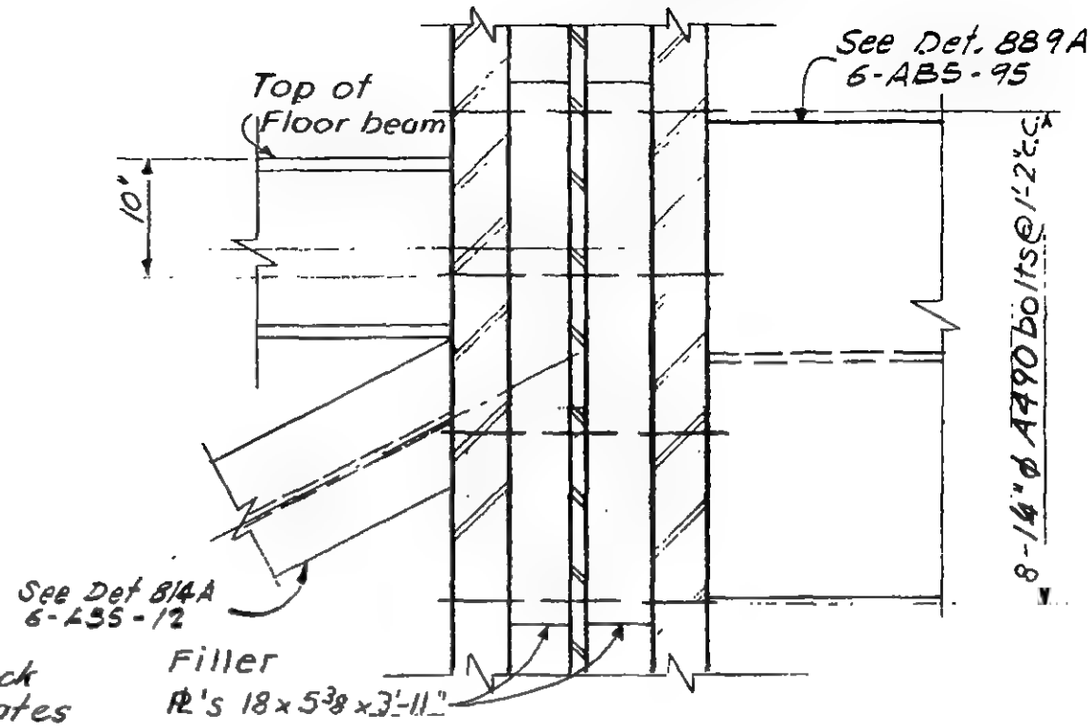

Section a-a
El. 367'-0"
El. 390'-0"

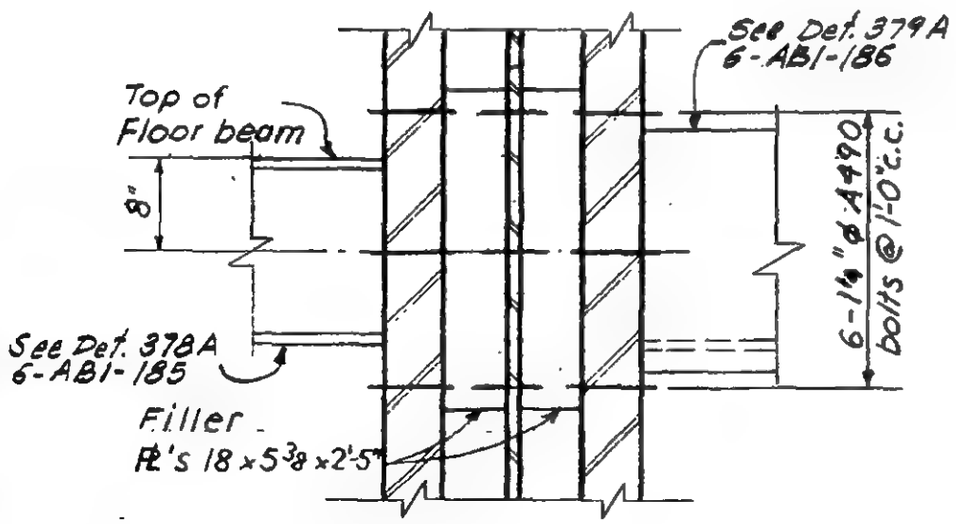

Section a-a
El. 344'-0"
El. 355'-6"
El. 378'-6"

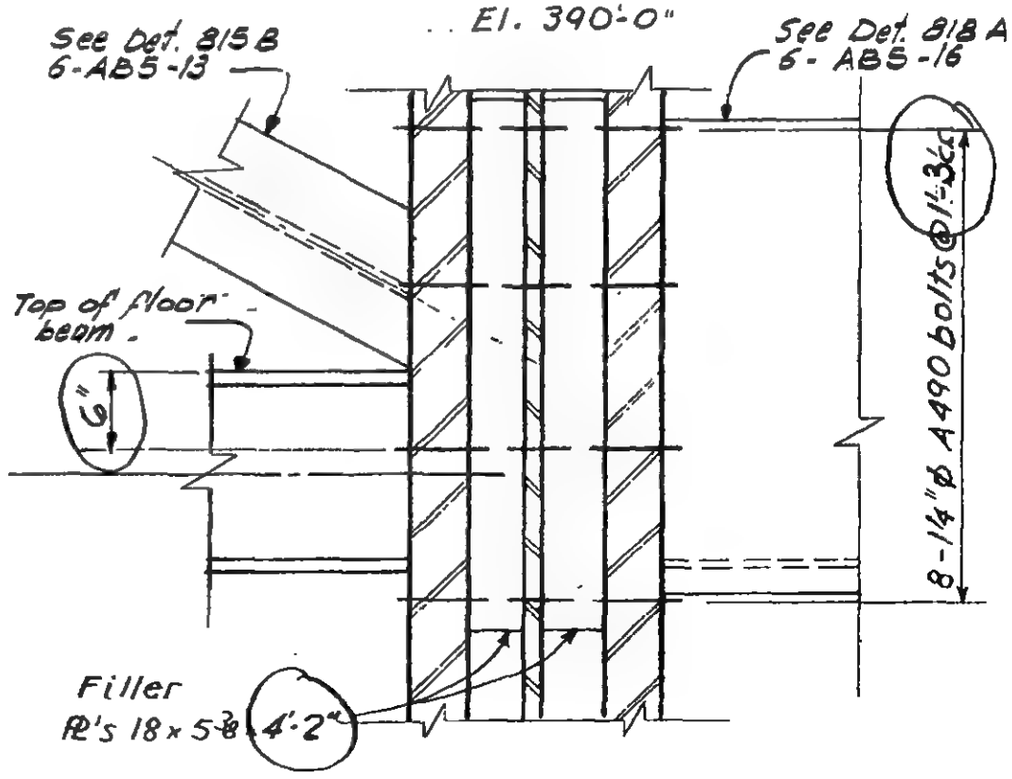

Section a-a
El. 332'-0

6-AB5-92

LICENSED PROFESSIONAL ENGINEER
LESLIE E. ROBERTSON
No. 34360
OF THE STATE OF NEW YORK

SKILLING - HELLE - CHRISTIANSEN - ROBERTSON Structural & Civil Engineers

PROJECT THE WORLD TRADE CENTER | TITLE COLUMN REINFORCING AT BRACING : COL. 1006 | DATE 8-14-67

REVISIONS

9·29·67

1006

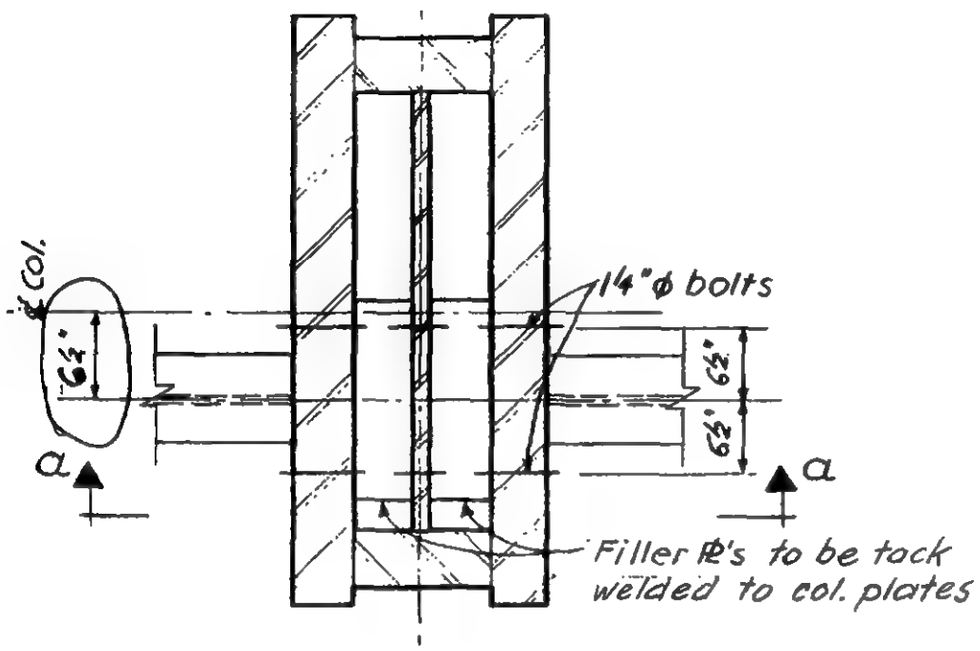

Plan

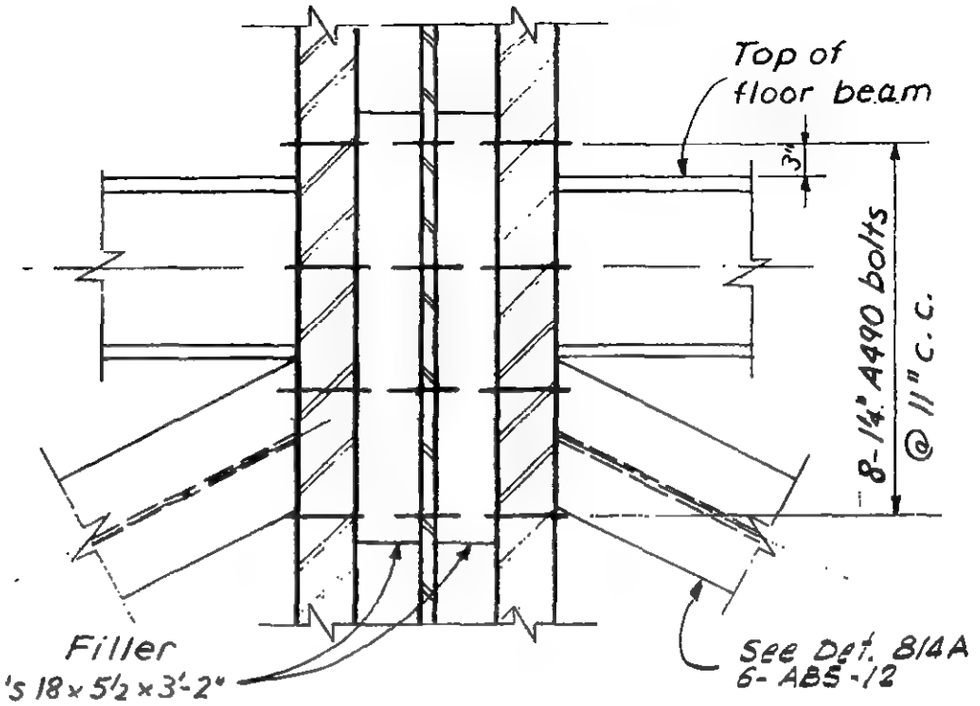

Section a-a

El. 367'-0"
El. 390'-0"

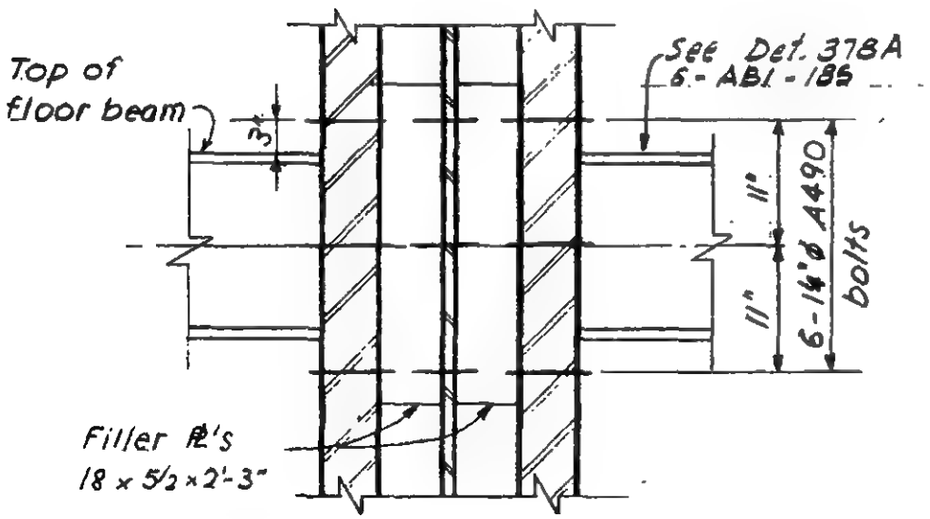

Section a-a

El. 344'-0"
El. 355'-6"
El. 378'-6"

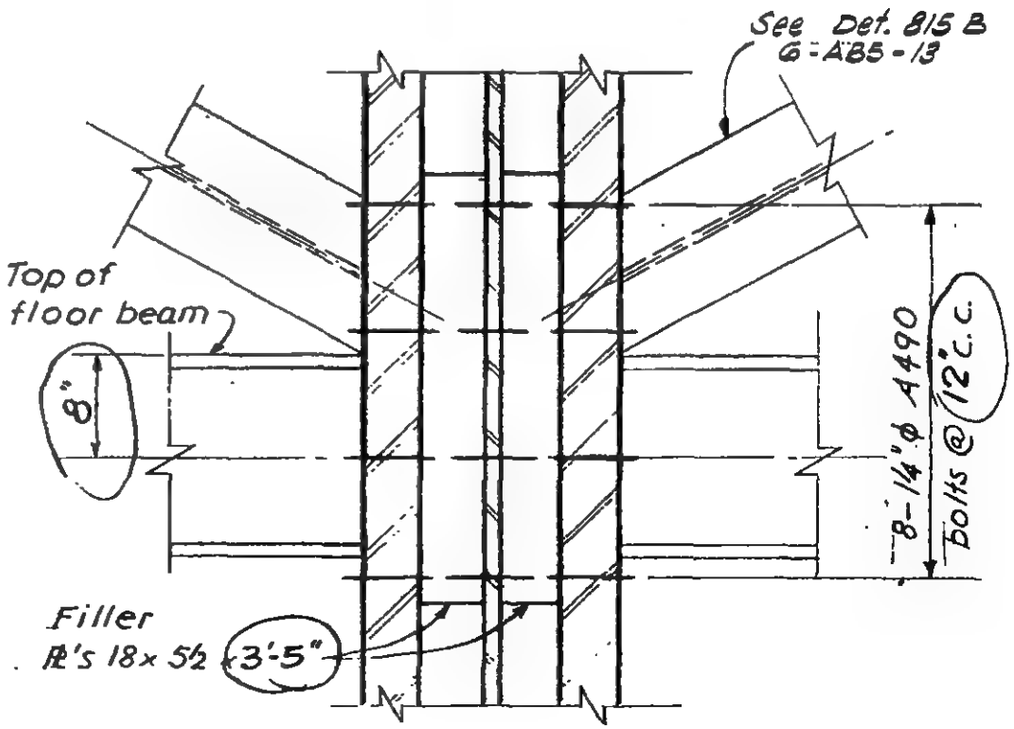

Section a-a

El. 332'-0"

6 - AB5 - 93

LICENSED PROFESSIONAL ENGINEER
LESLIE E. ROBERTSON
No. 34360
STATE OF NEW YORK

SKILLING - HELLE - CHRISTIANSEN - ROBERTSON — Structural & Civil Engineers

PROJECT: THE WORLD TRADE CENTER | TITLE: COL. REINF. AT BRACING COL. 503 | DATE: 8-14-67

EVISIONS

9-29-67

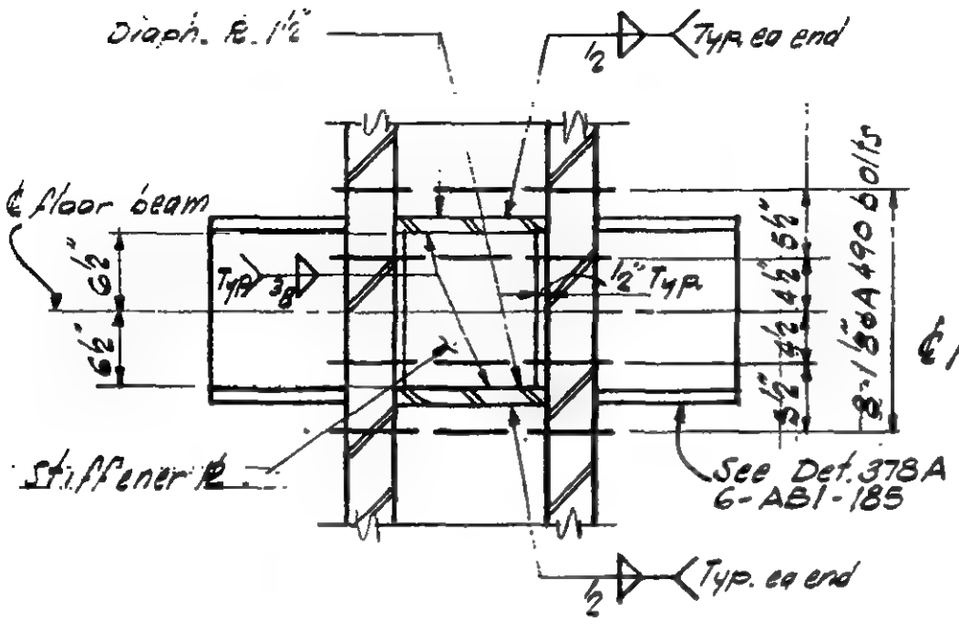

Section a-a
El. 344
El. 355'-6
El. 378'-6"

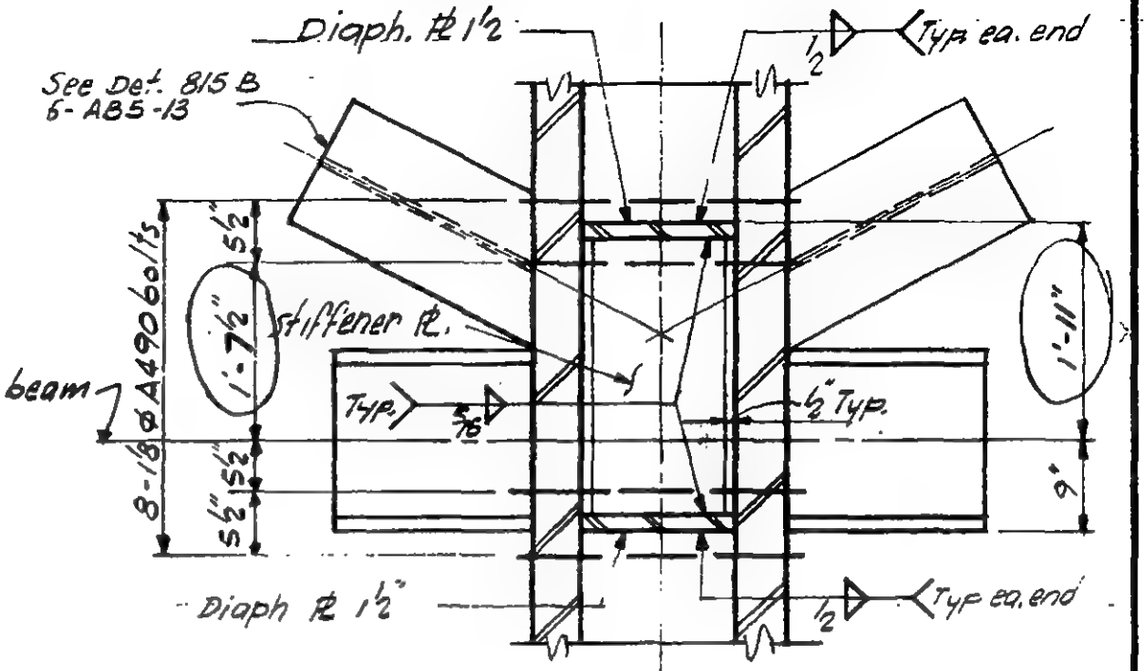

Section a-a
El. 332'

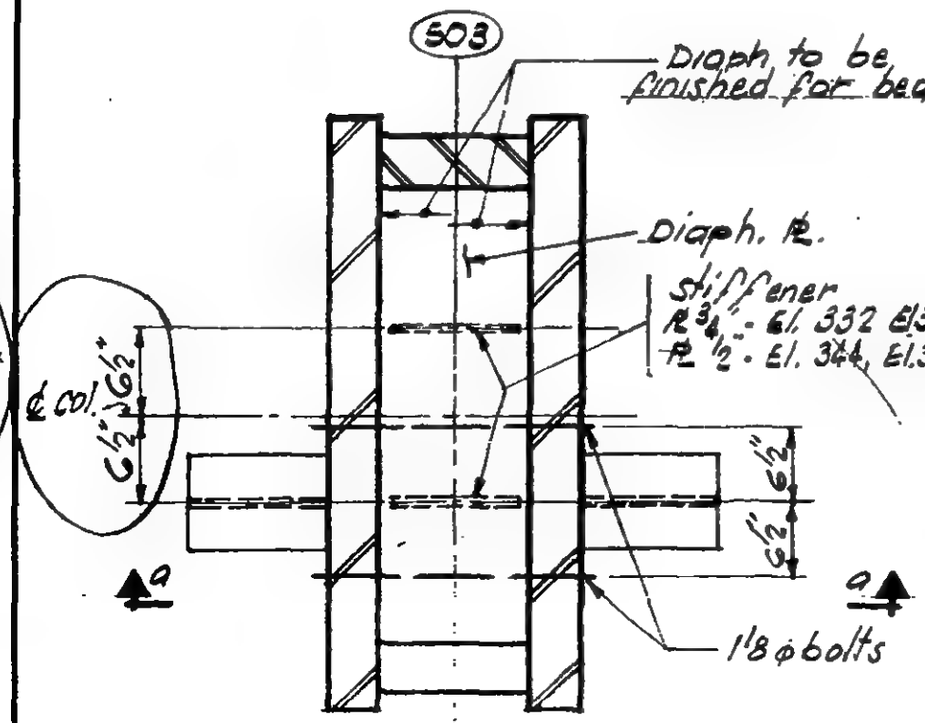

PLAN

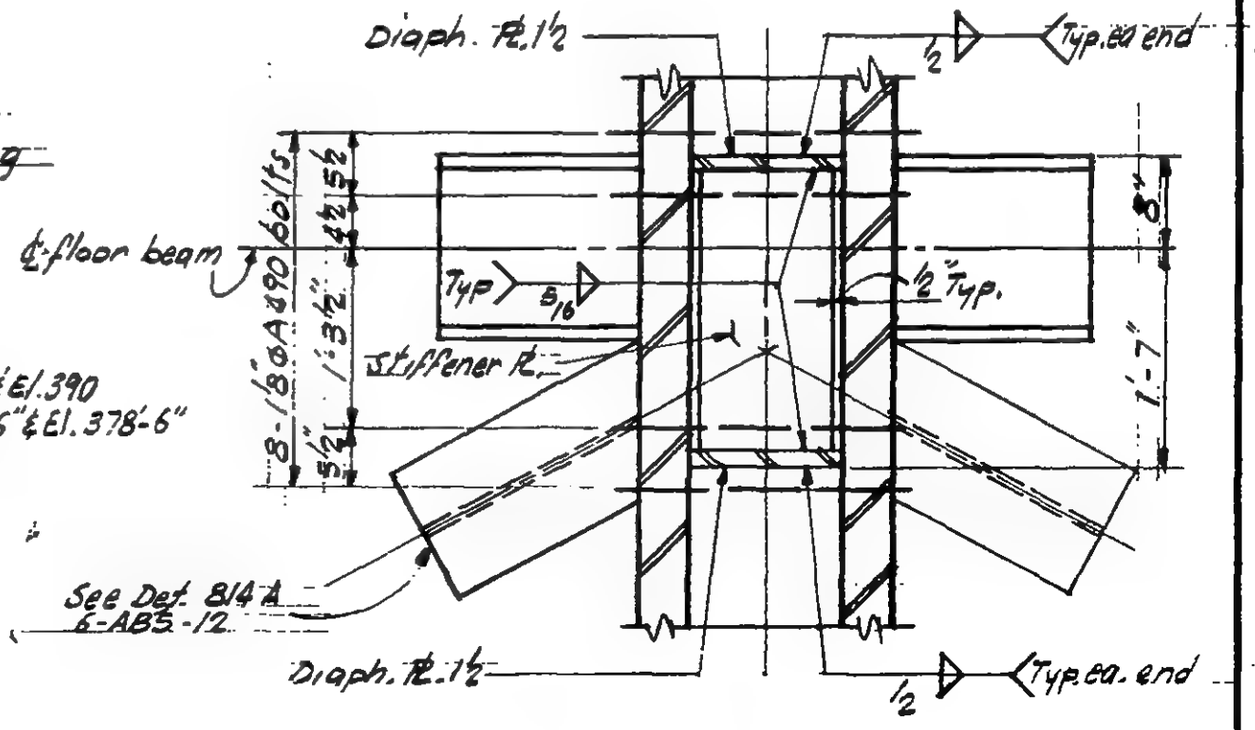

Section a-a
El. 367
El. 390

6-AB5-94

LICENSED PROFESSIONAL ENGINEER
LESLIE E. ROBERTSON
No. 34360
STATE OF NEW YORK

WORTHINGTON, SKILLING, HELLE & JACKSON — Civil & Structural Engineers

PROJECT THE WORLD TRADE CENTER | TITLE CONNECTION DETAIL 889 A | DATE 8-14-67

EVISIONS

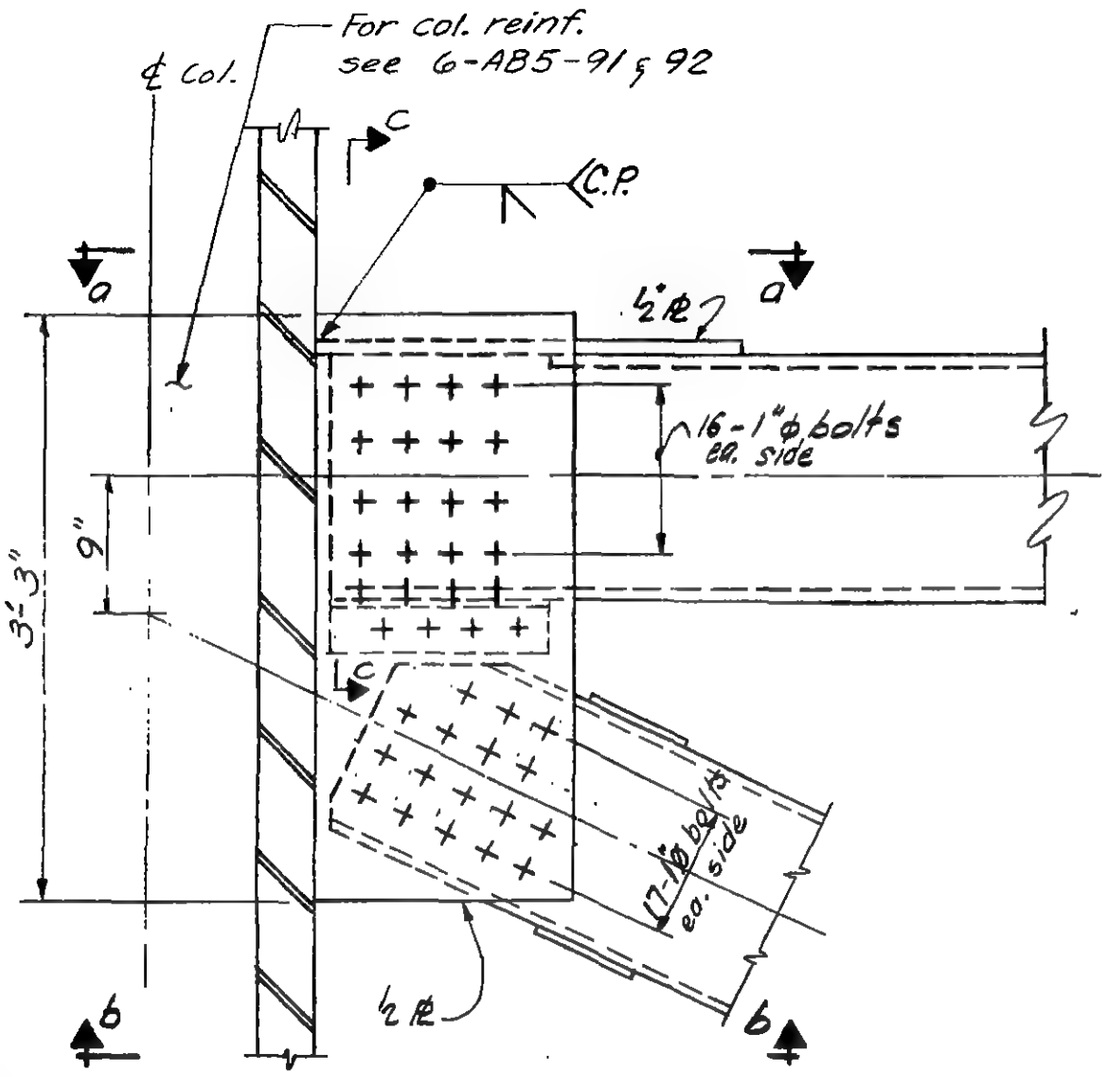

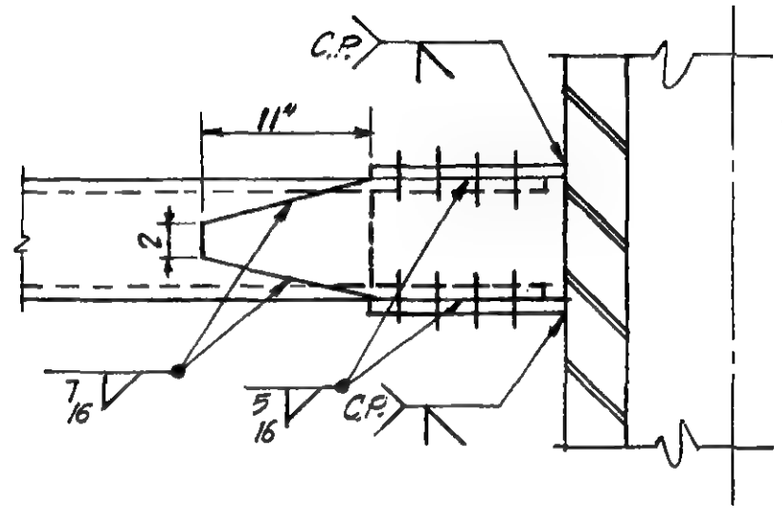

SECTION a-a

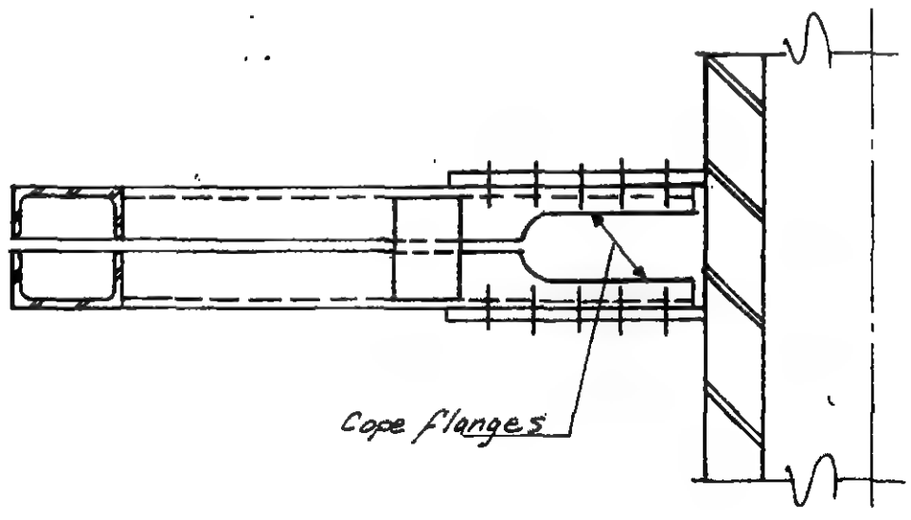

SECTION b-b

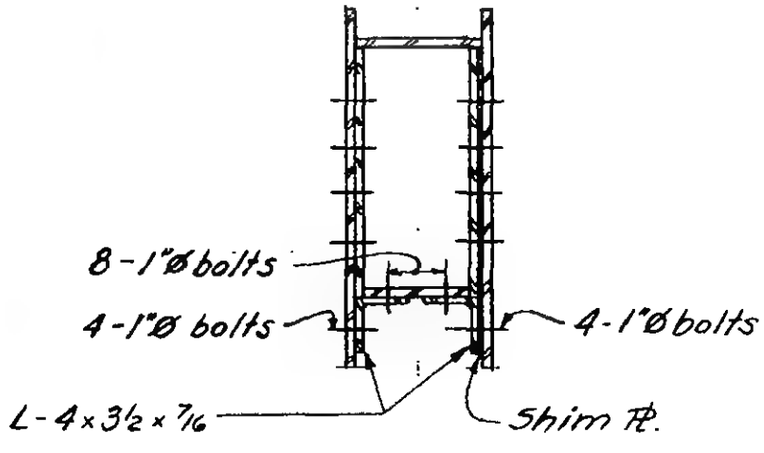

Section c-c

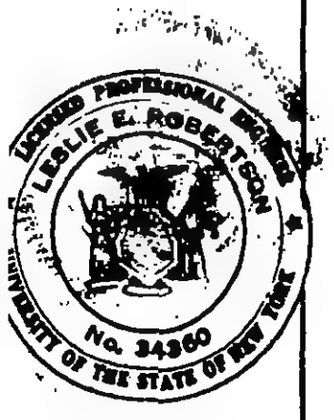

6-AB5-95

WORTHINGTON, SKILLING, HELLE & JACKSON — Civil & Structural Engineers

PROJECT: THE WORLD TRADE CENTER | TITLE: VERTICAL BRACING SECTION A-A | DATE: 10-31-67

REVISIONS

12-19-67
1-24-68

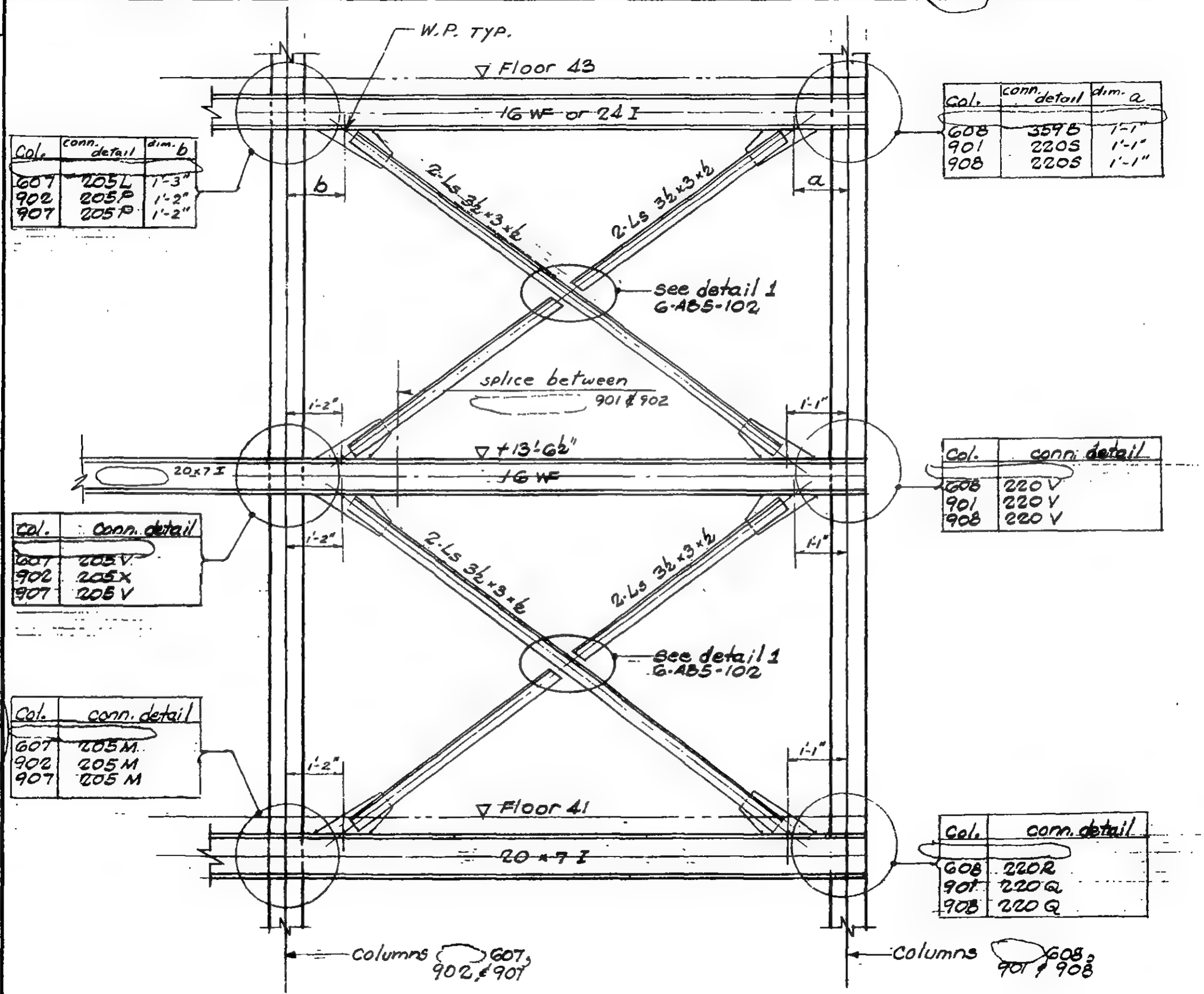

Col.	conn. detail	dim. b
607	205L	1'-3"
902	205P	1'-2"
907	205P	1'-2"

Col.	conn. detail	dim. a
608	359B	1'-1"
901	220S	1'-1"
908	220S	1'-1"

Col.	conn. detail
607	205V
902	205X
907	205V

Col.	conn. detail
608	220V
901	220V
908	220V

Col.	conn. detail
607	205M
902	205M
907	205M

Col.	conn. detail
608	220R
901	220Q
908	220Q

LICENSED PROFESSIONAL ENGINEER
LESLIE E. ROBERTSON
No. 34360
UNIVERSITY OF THE STATE OF NEW YORK

6-ABS-96

WORTHINGTON, SKILLING, HELLE & JACKSON Civil & Structural Engineers

PROJECT THE WORLD TRADE CENTER | TITLE VERTICAL BRACING SECTION B-B | DATE 10-31-67

REVISIONS

12-19-67
1-24-68

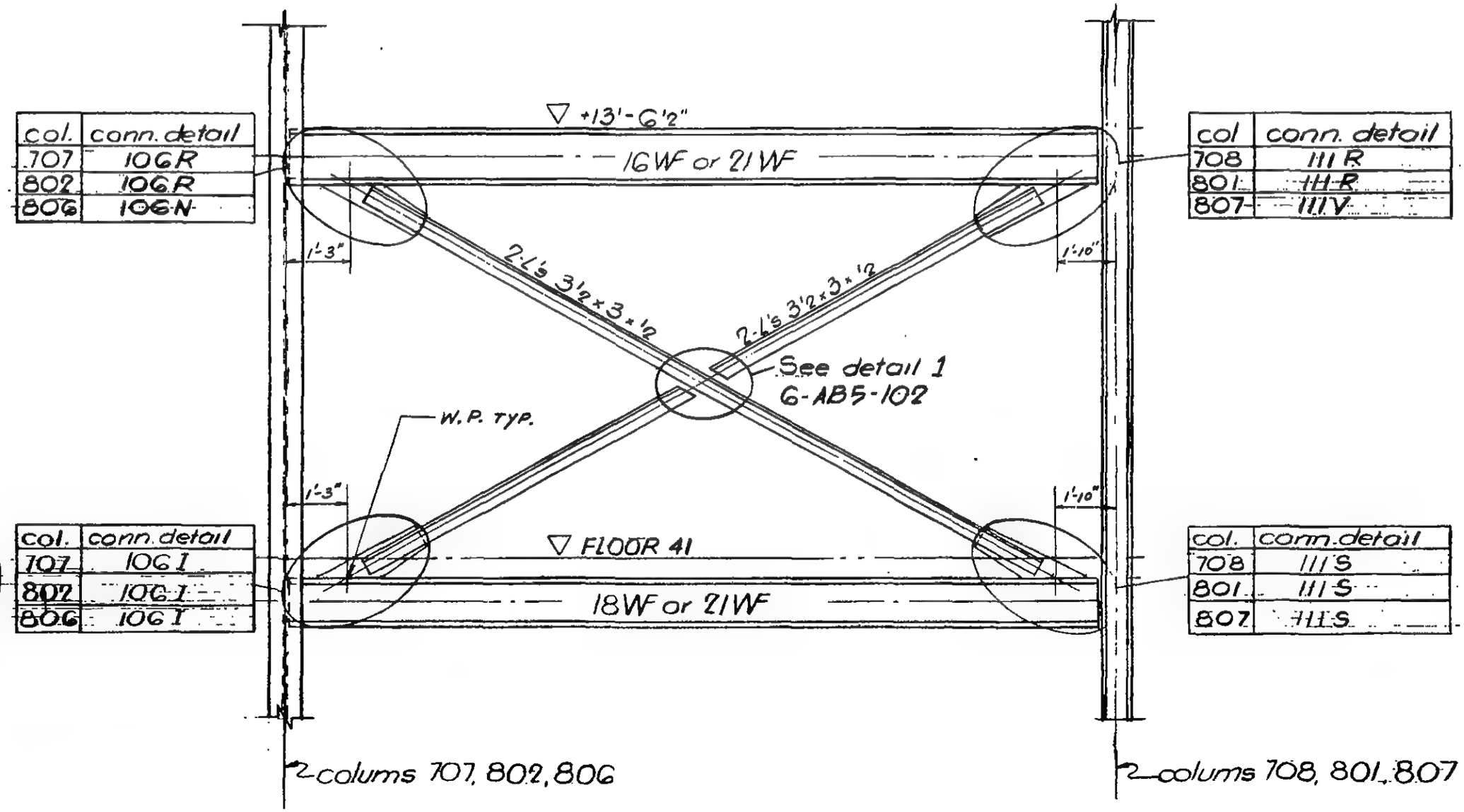

col.	conn. detail
707	106R
802	106R
806	106N

col	conn. detail
708	111R
801	111R
807	111V

col.	conn. detail
707	106I
802	106I
806	106I

col.	conn. detail
708	111S
801	111S
807	111S

2 colums 707, 802, 806

2 colums 708, 801, 807

LICENSED PROFESSIONAL ENGINEER
LESLIE E. ROBERTSON
No. 34360
UNIVERSITY OF THE STATE OF NEW YORK

6-AB5-97

SKILLING - HELLE - CHRISTIANSEN - ROBERTSON Structural & Civil Engineers

PROJECT THE WORLD TRADE CENTER | TITLE VERTICAL BRACING SECTION C-C | DATE 1-24-68

REVISIONS

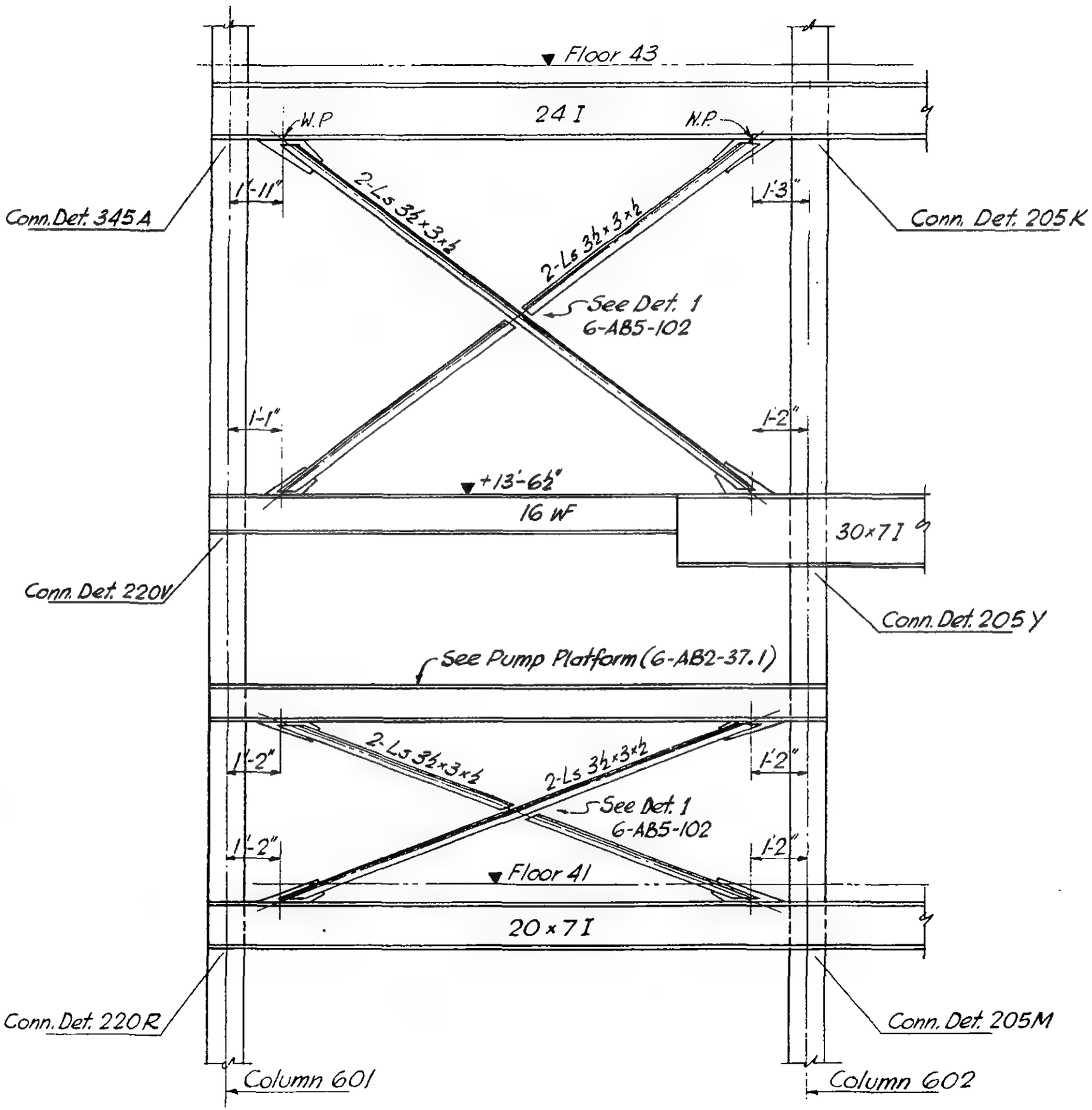

LICENSED PROFESSIONAL ENGINEER
LESLIE E. ROBERTSON
No. 34360
UNIVERSITY OF NEW YORK

6-AB5-97.1

SKILLING - HELLE - CHRISTIANSEN - ROBERTSON Structural & Civil Engineers

PROJECT THE WORLD TRADE CENTER | TITLE VERTICAL BRACING SECTION F-F | DATE 10-31-67

REVISIONS

12-19-67

2-21-68

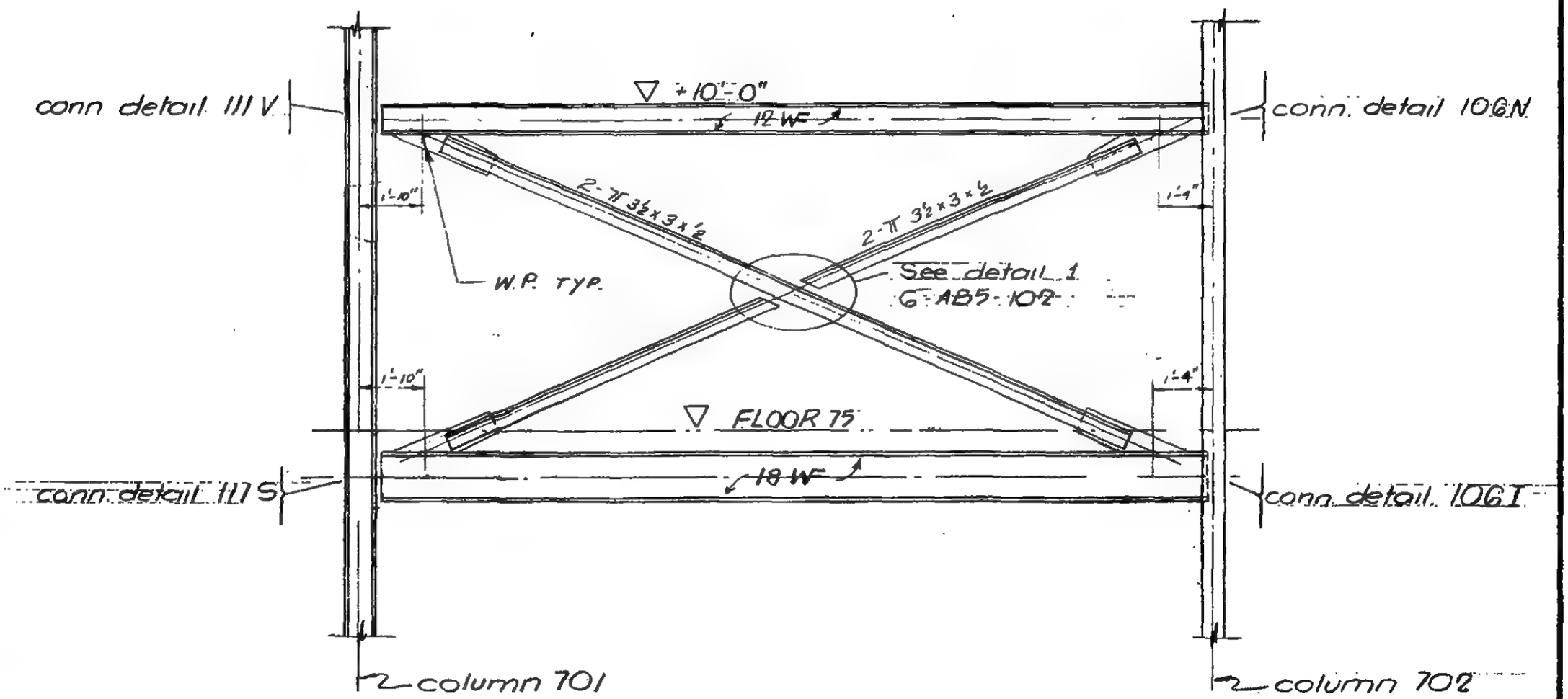

LICENSED PROFESSIONAL ENGINEER
LESLIE E. ROBERTSON
No. 34360
UNIVERSITY OF THE STATE OF NEW YORK

6-AB5-98

SKILLING - HELLE - CHRISTIANSEN - ROBERTSON Structural & Civil Engineers

PROJECT THE WORLD TRADE CENTER | TITLE VERTICAL BRACING SECTION E-E | DATE 10-31-67

REVISIONS
12-19-67
2-21-68

col.	conn. detail
601	220S
608	220S

col.	conn. detail
602	205P
607	205P

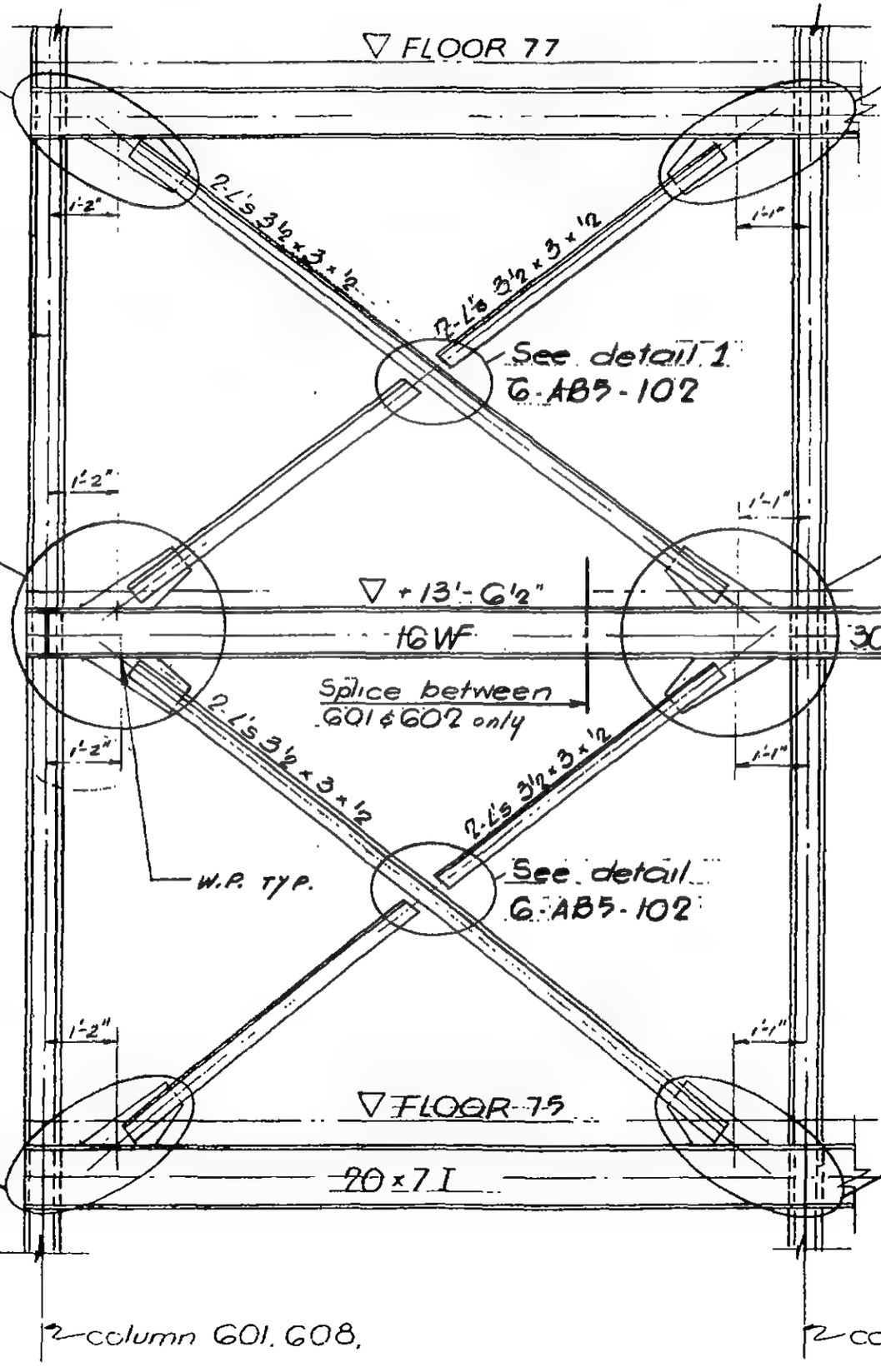

col.	conn. detail
601	306D
608	306D

col.	conn. detail
602	205Y
607	205V

col.	conn detail
601	220Q
608	220Q

col.	conn detail
607	205M
607	205M

2 column 601, 608.

2 column 602, 607

LICENSED PROFESSIONAL ENGINEER
LESLIE E. ROBERTSON
No. 34360
UNIVERSITY OF THE STATE OF NEW YORK

6 - AB5-99

SKILLING - HELLE - CHRISTIANSEN - ROBERTSON Structural & Civil Engineers

PROJECT THE WORLD TRADE CENTER | TITLE VERTICAL BRACING SECTION D-D | DATE 10-31-67

EVISIONS

12-19-67

2-21-68

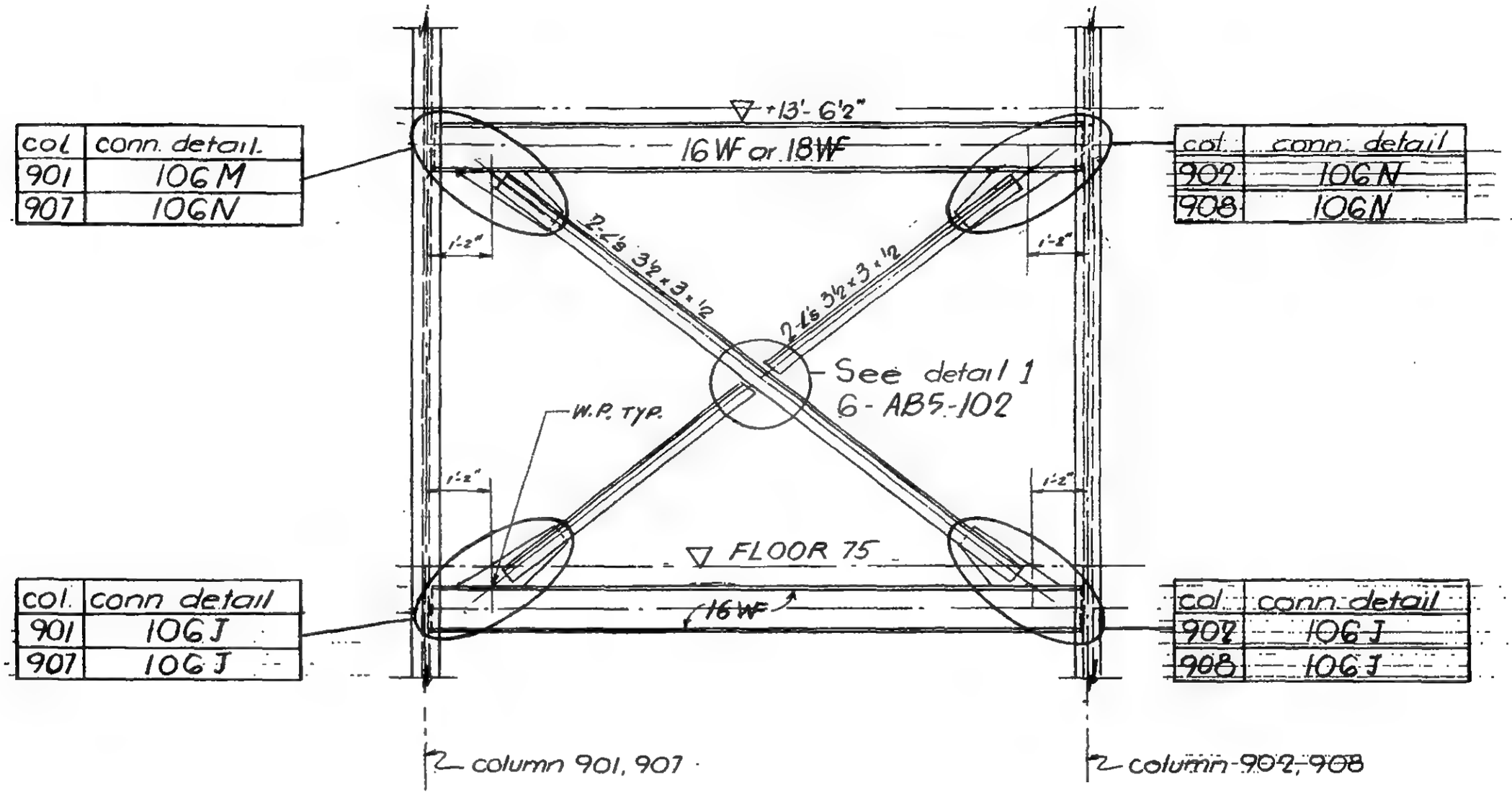

col	conn. detail
901	106M
907	106N

col	conn. detail
902	106N
908	106N

col.	conn detail
901	106J
907	106J

col	conn detail
902	106J
908	106J

LICENSED PROFESSIONAL ENGINEER
LESLIE E. ROBERTSON
No. 34360
UNIVERSITY OF THE STATE OF NEW YORK

6-AB5-100

SKILLING - HELLE - CHRISTIANSEN - ROBERTSON Structural & Civil Engineers

PROJECT THE WORLD TRADE CENTER | TITLE VERTICAL BRACING SECTION 6-6 | DATE 10-31-67

REVISIONS

12-19-67

2-21-68

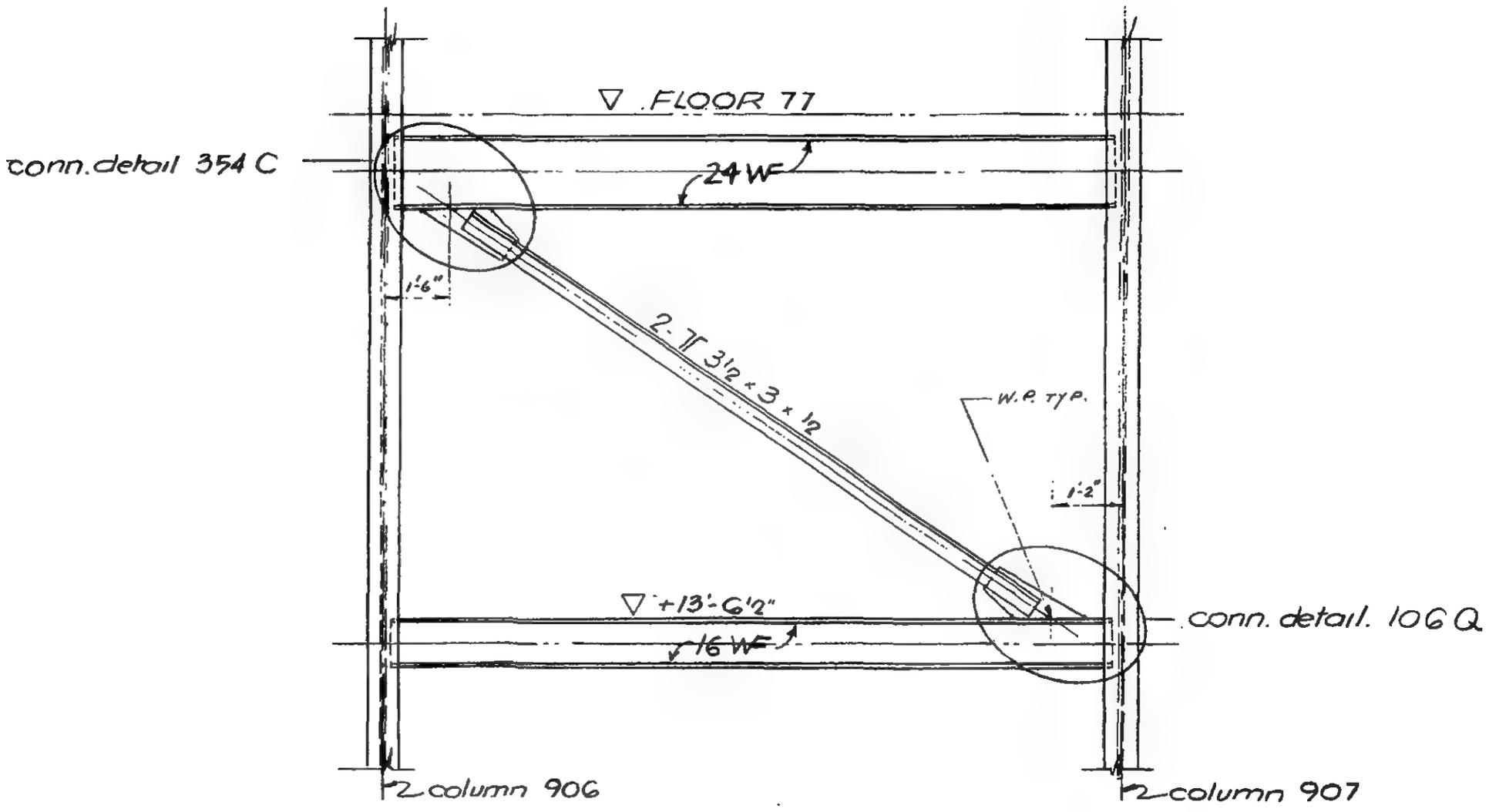

LICENSED PROFESSIONAL ENGINEER
LESLIE E. ROBERTSON
No. 34360
UNIVERSITY OF THE STATE OF NEW YORK

6 - AB5 - 101

SKILLING - HELLE - CHRISTIANSEN - ROBERTSON — Structural & Civil Engineers

PROJECT: THE WORLD TRADE CENTER | TITLE: DIAGONAL BRACING DETAIL 1 | DATE: 10-31-67

REVISIONS

11-17-67

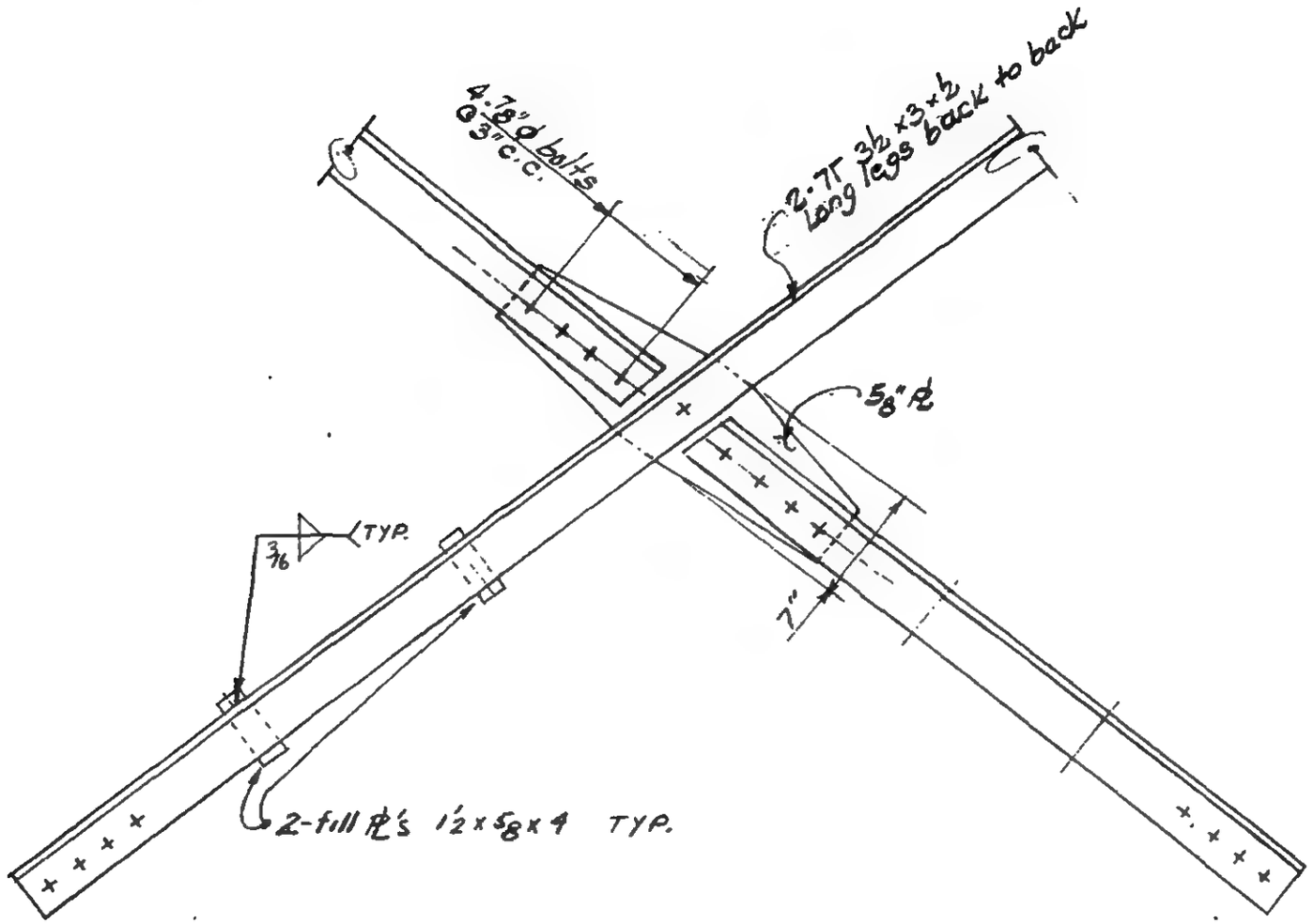

LICENSED PROFESSIONAL ENGINEER
LESLIE E. ROBERTSON
No. 34360
UNIVERSITY OF THE STATE OF NEW YORK

G-AB5-102

SKILLING - HELLE - CHRISTIANSEN - ROBERTSON — Structural & Civil Engineers

PROJECT THE WORLD TRADE CENTER | TITLE TEMPORARY COLUMN BRACING EL. 264' | DATE 2-9-68

REVISIONS

3-11-68

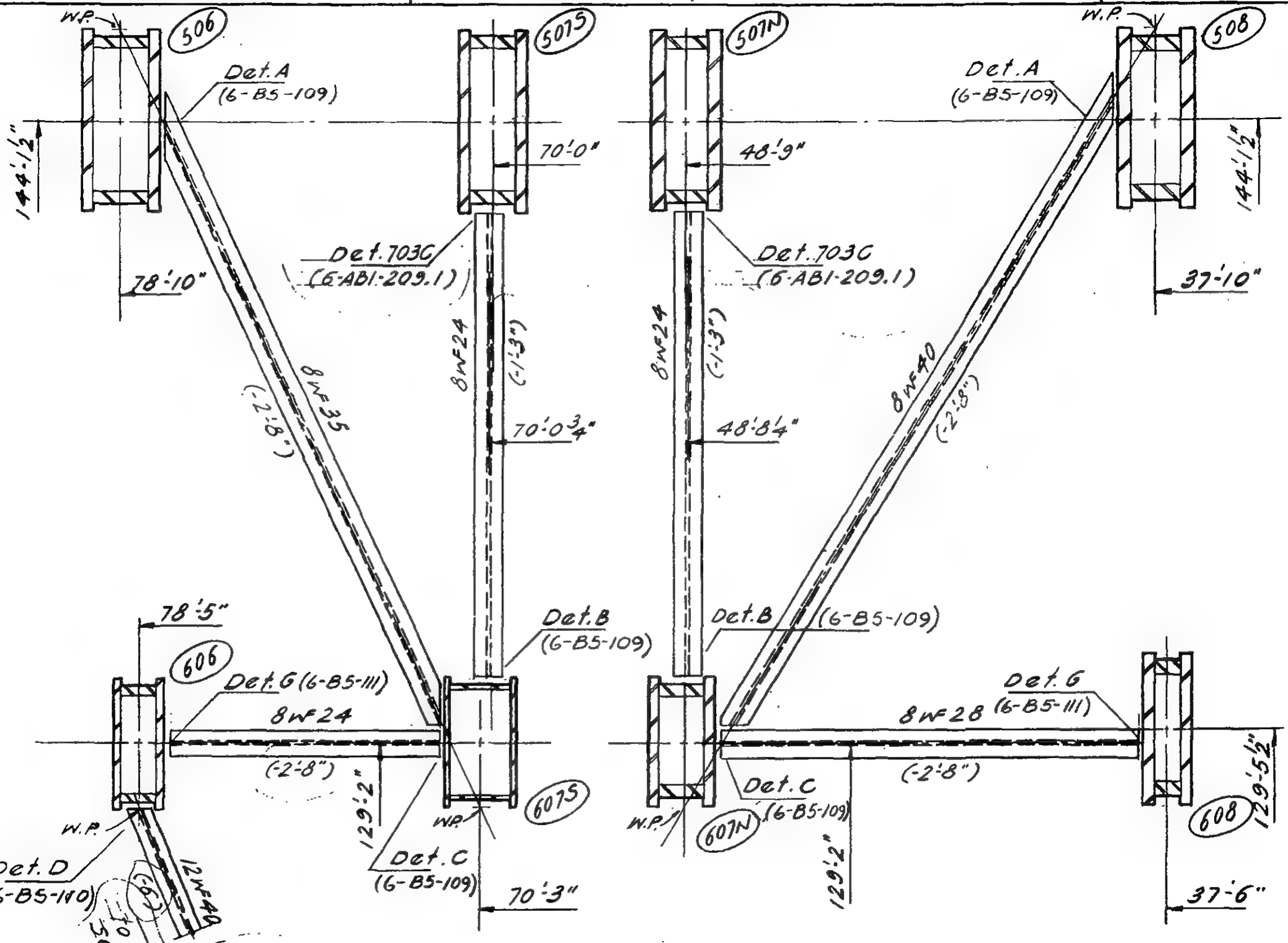

LICENSED PROFESSIONAL ENGINEER
LESLIE E. ROBERTSON
No. 34360
UNIVERSITY OF THE STATE OF NEW YORK

6- B5-103

SKILLING - HELLE - CHRISTIANSEN - ROBERTSON Structural & Civil Engineers

PROJECT THE WORLD TRADE CENTER | TITLE TEMPORARY COLUMN BRACING EL. 264' | DATE 3-11-68

REVISIONS

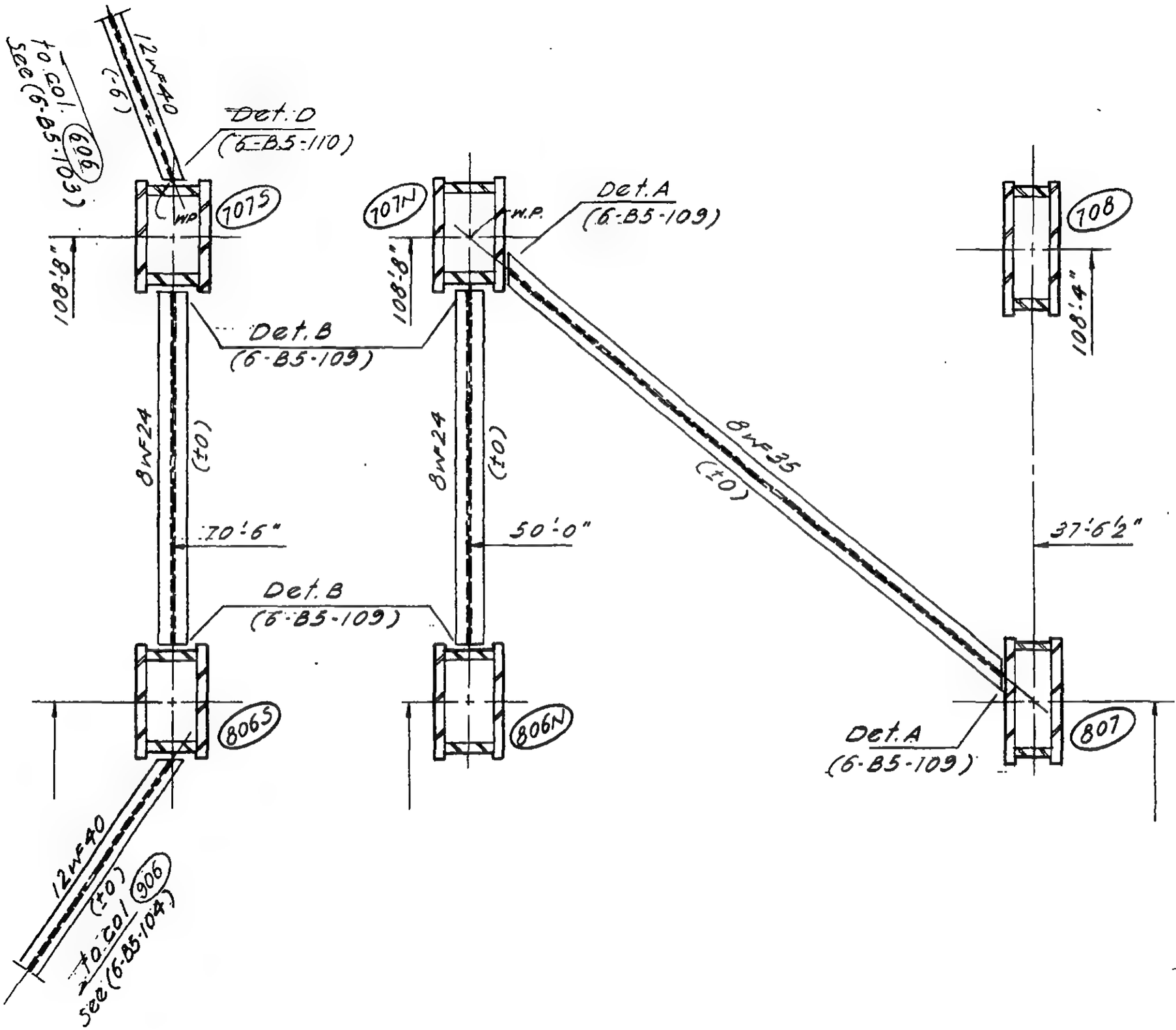

LICENSED PROFESSIONAL ENGINEER
LESLIE E. ROBERTSON
No. 34360
UNIVERSITY OF THE STATE OF NEW YORK

6-B5-103.1

SKILLING - HELLE - CHRISTIANSEN - ROBERTSON Structural & Civil Engineers

PROJECT THE WORLD TRADE CENTER | TITLE TEMPORARY COLUMN BRACING EL. 264' | DATE 2-9-68

EVISIONS

3-11-68

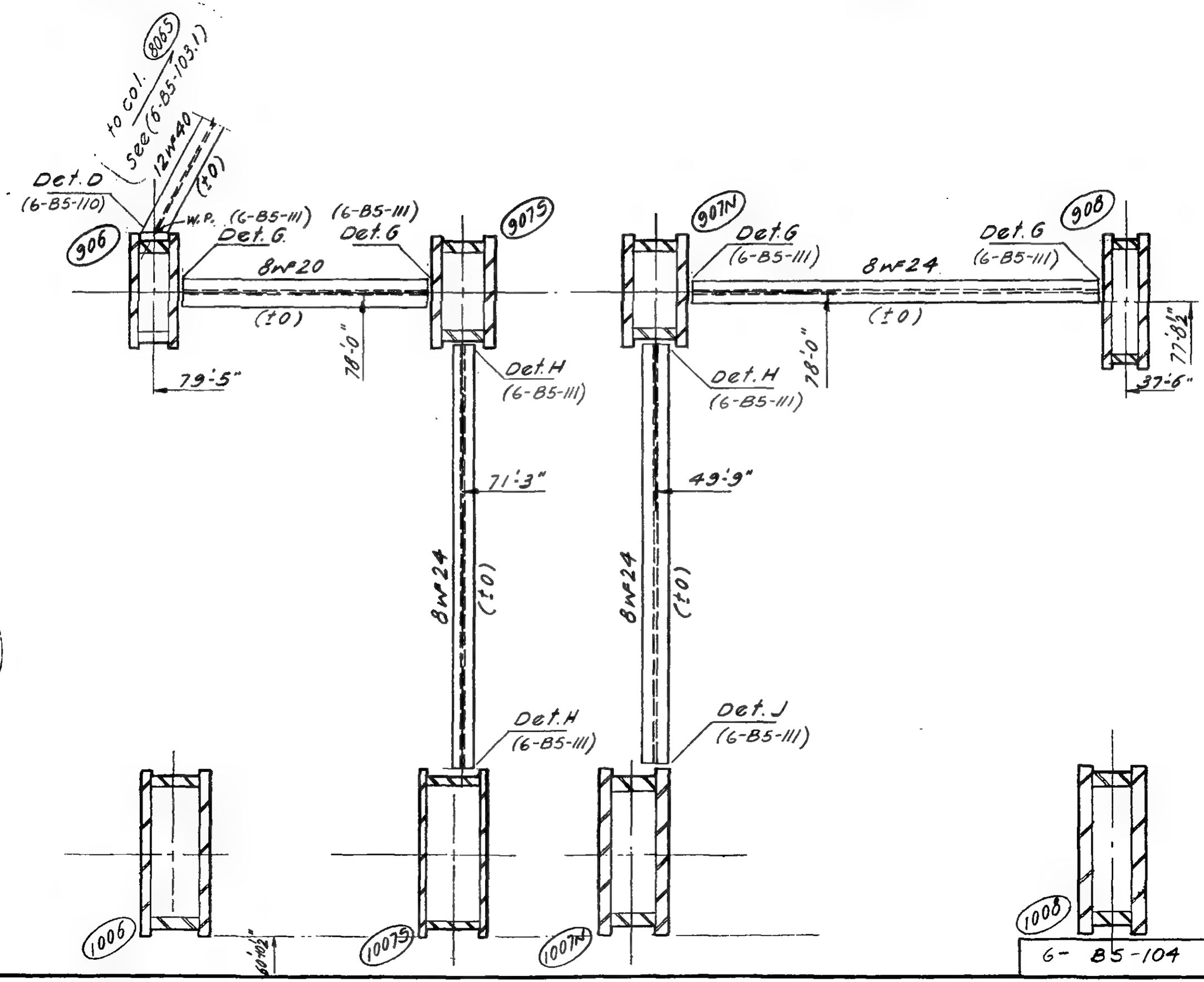

LICENSED PROFESSIONAL ENGINEER LESLIE E. ROBERTSON No. 34200 UNIVERSITY OF THE STATE OF NEW YORK

G- B5-104

SKILLING - HELLE - CHRISTIANSEN - ROBERTSON Structural & Civil Engineers

PROJECT THE WORLD TRADE CENTER | TITLE TEMPORARY COLUMN BRACING EL. 274' | DATE 2-9-68

REVISIONS

3-11-68

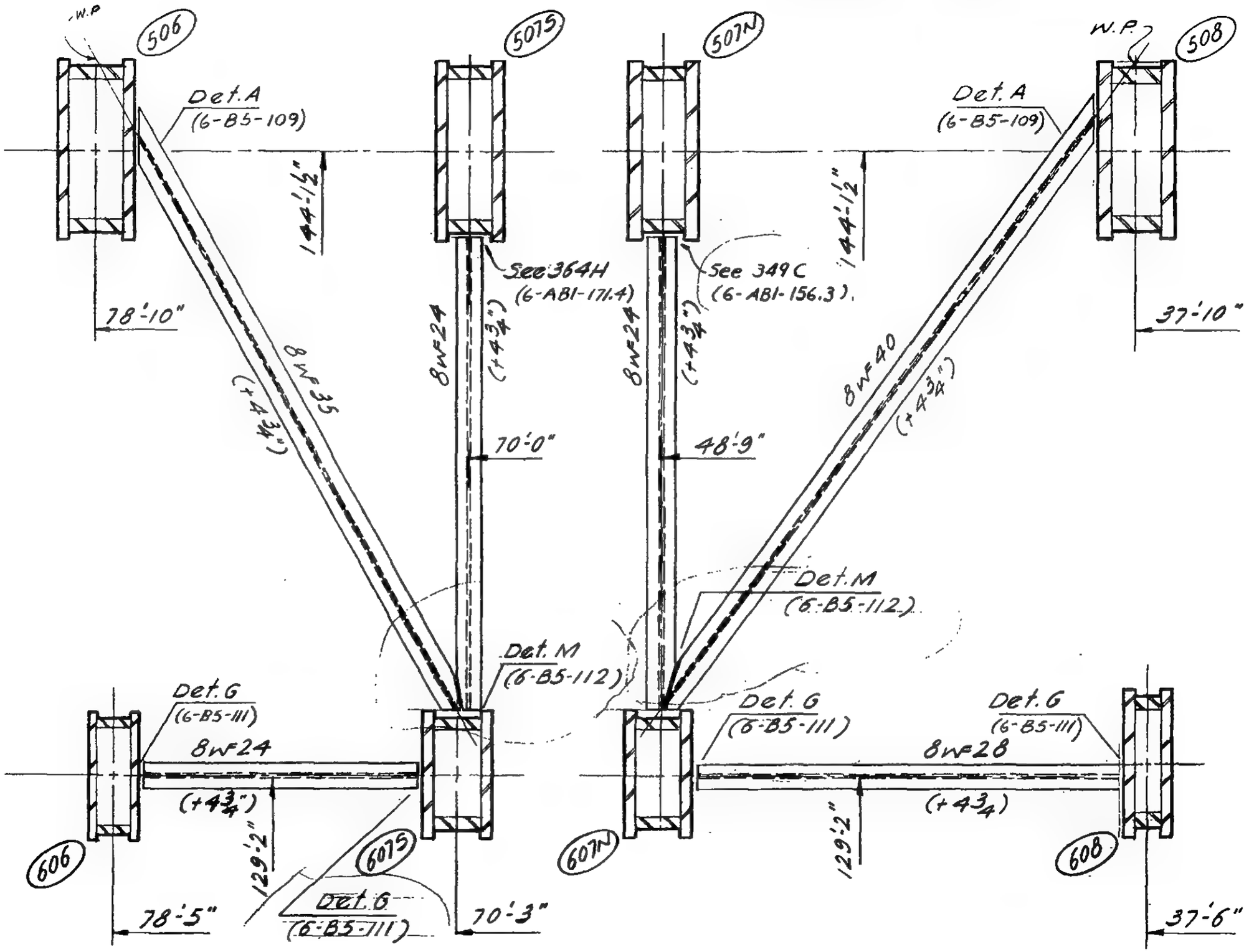

LICENSED PROFESSIONAL ENGINEER
LESLIE E. ROBERTSON
No. 34360
UNIVERSITY OF THE STATE OF NEW YORK

6- B5-105

SKILLING - HELLE - CHRISTIANSEN - ROBERTSON Structural & Civil Engineers

PROJECT THE WORLD TRADE CENTER | TITLE TEMPORARY COLUMN BRACING EL. 274' | DATE 3-11-68

REVISIONS

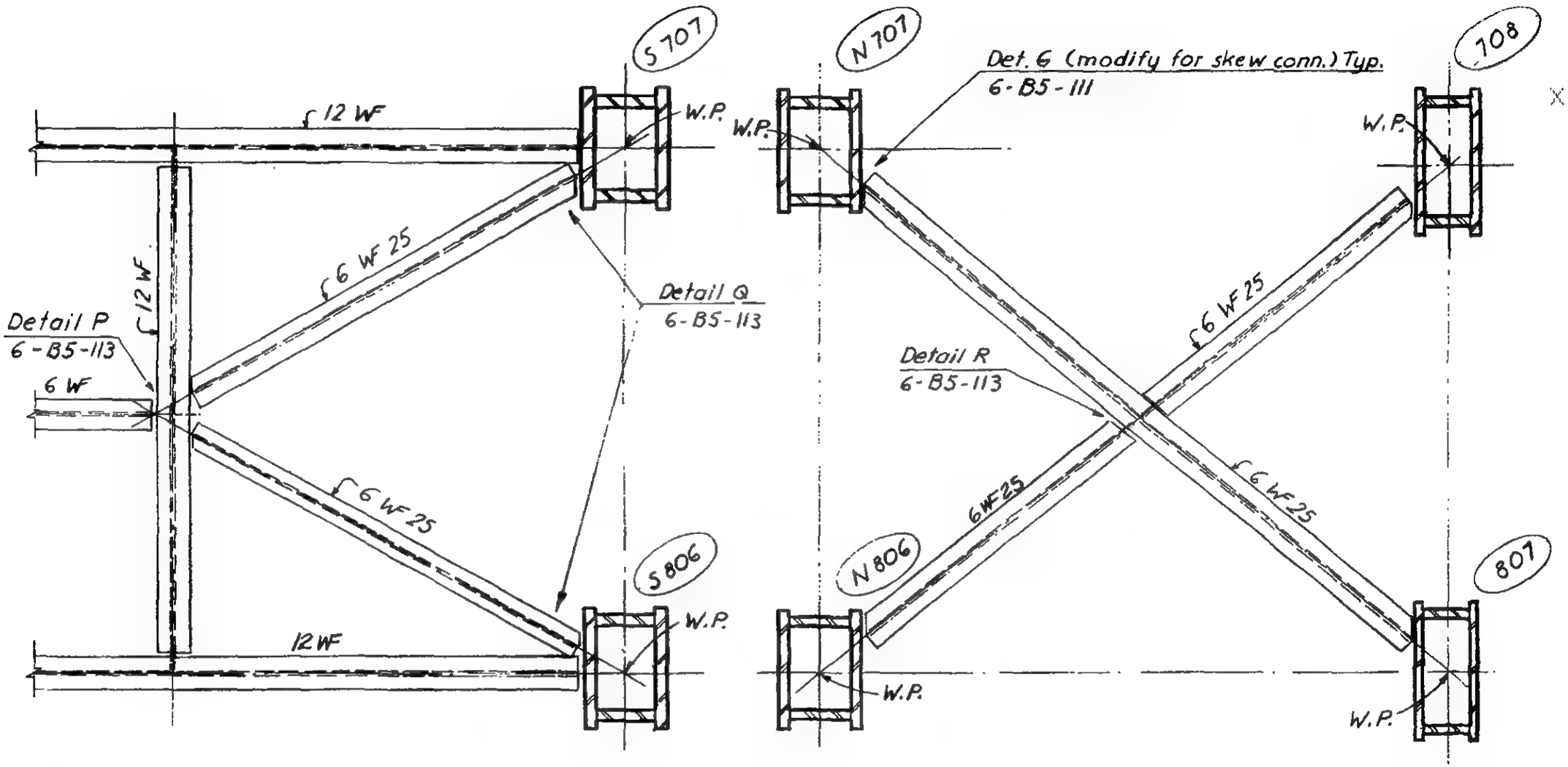

LICENSED PROFESSIONAL ENGINEER
LESLIE E. ROBERTSON
No. 34360
UNIVERSITY OF THE STATE OF NEW YORK

6-B5-105.1

SKILLING - HELLE - CHRISTIANSEN - ROBERTSON Structural & Civil Engineers

PROJECT THE WORLD TRADE CENTER | TITLE TEMPORARY COLUMN BRACING EL. 274' | DATE 2-9-68

REVISIONS

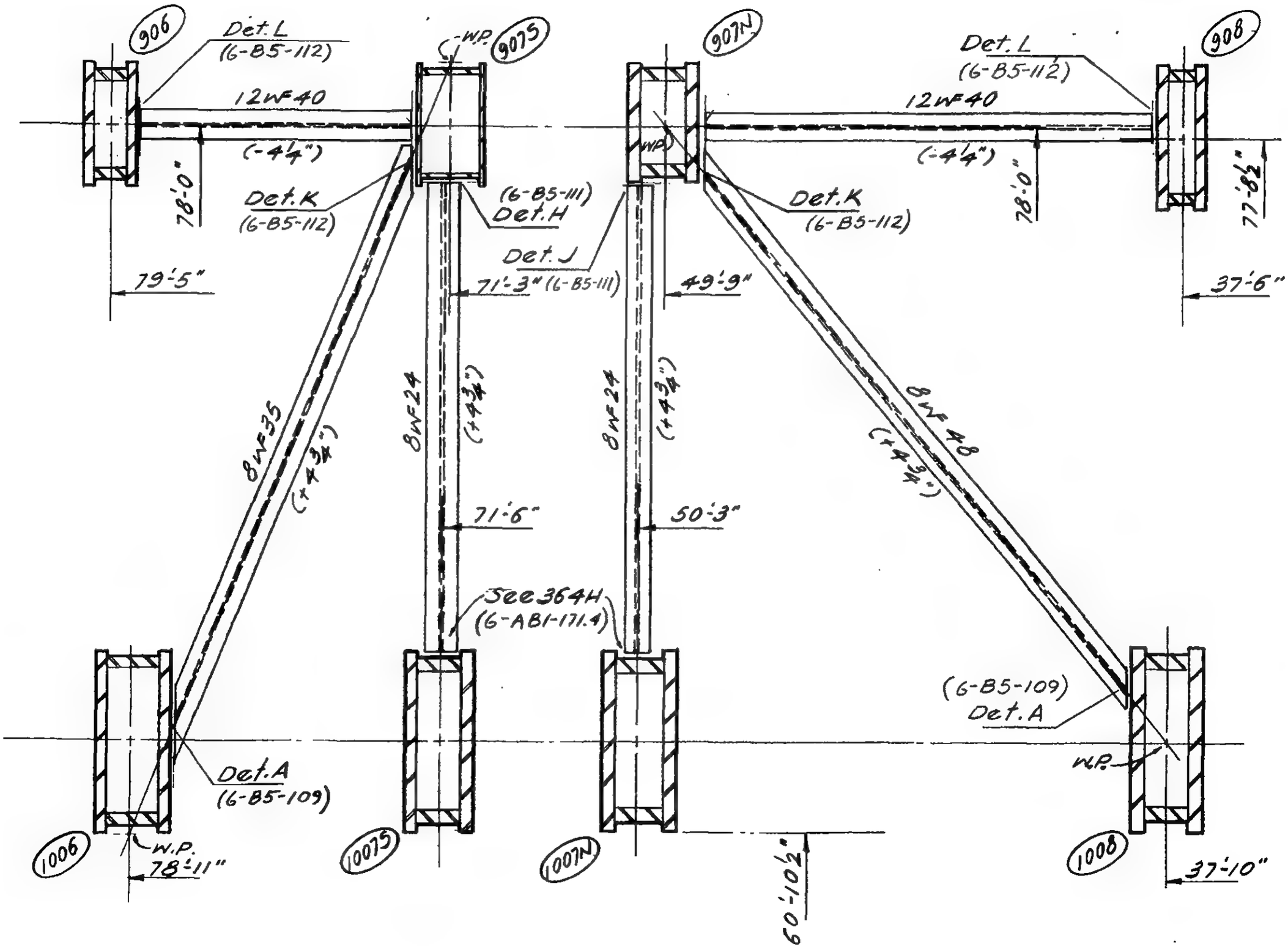

LICENSED PROFESSIONAL ENGINEER
LESLIE E. ROBERTSON
No. 34360
UNIVERSITY OF THE STATE OF NEW YORK

6- B5-106

SKILLING - HELLE - CHRISTIANSEN - ROBERTSON Structural & Civil Engineers

PROJECT THE WORLD TRADE CENTER | TITLE TEMPORARY BRACING DETAILS A, B & C | DATE 2-9-68

REVISIONS

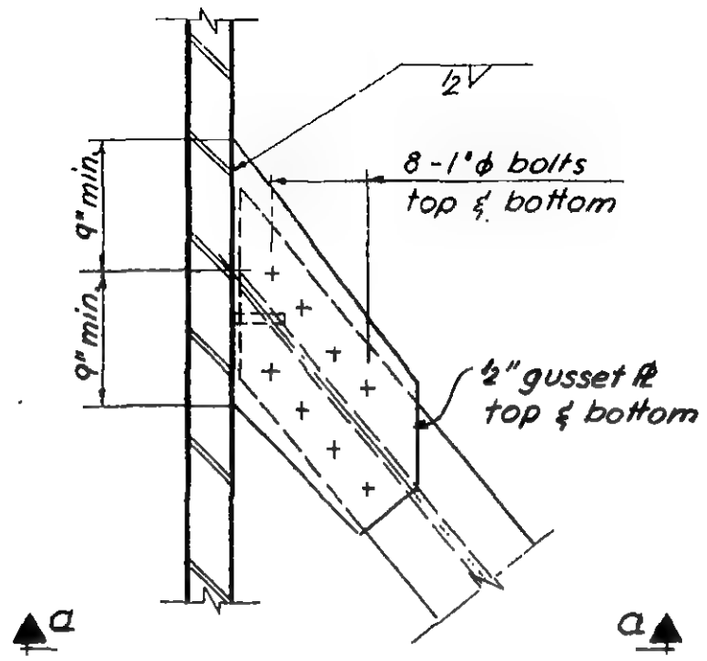

Plan

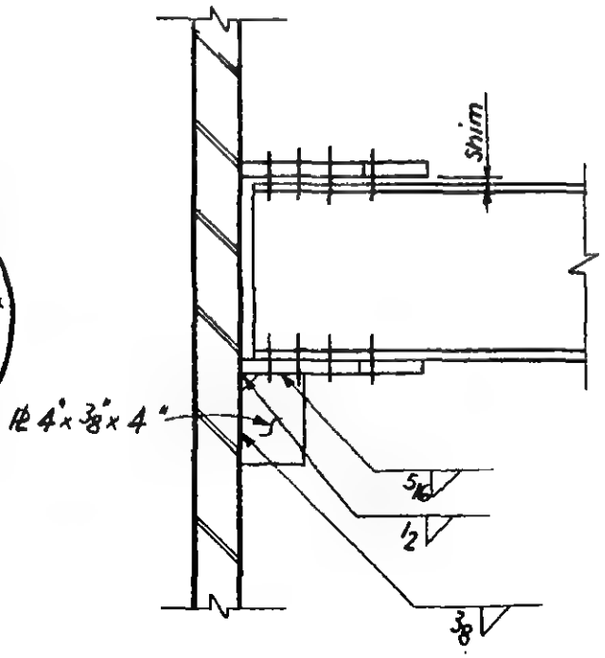

Section a-a

Detail A

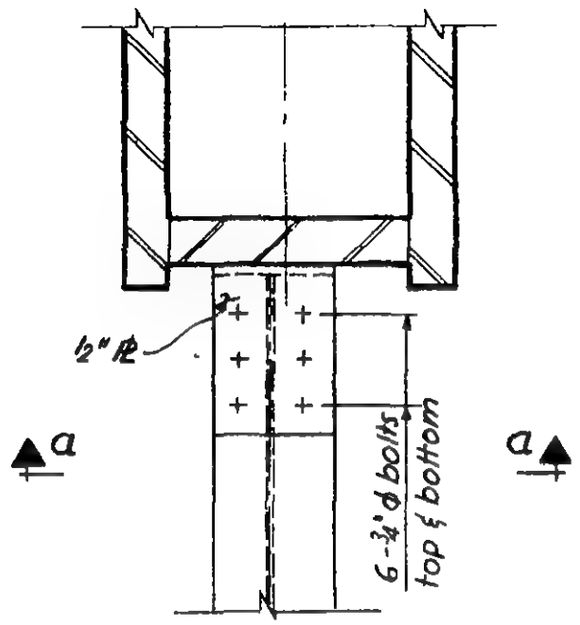

Plan

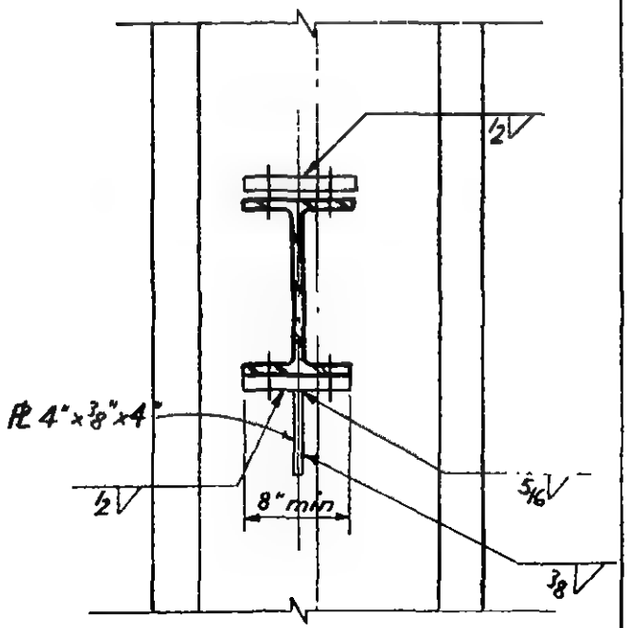

Section a-a

Detail B

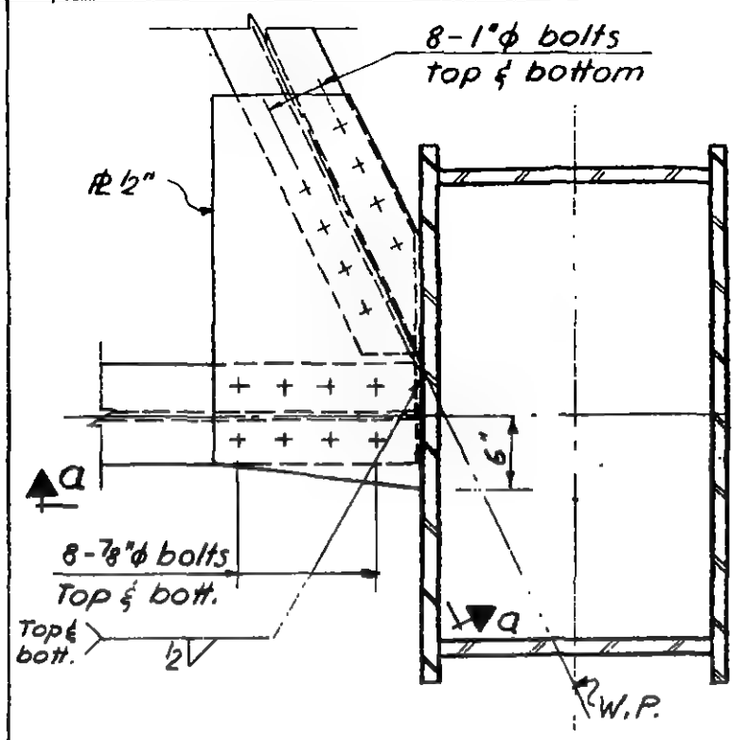

Plan

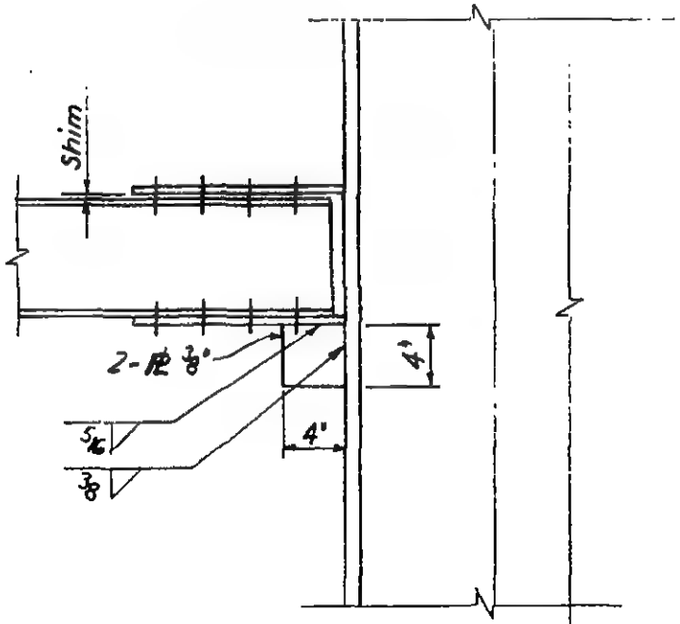

Section a-a

Detail C

6-B5-109

REGISTERED PROFESSIONAL ENGINEER
LESLIE E. ROBERTSON
No. 34360
UNIVERSITY OF THE STATE OF NEW YORK

SKILLING - HELLE - CHRISTIANSEN - ROBERTSON Structural & Civil Engineers

PROJECT THE WORLD TRADE CENTER | TITLE TEMPORARY BRACING DETAILS D,E&F | DATE 2-9-68

REVISIONS

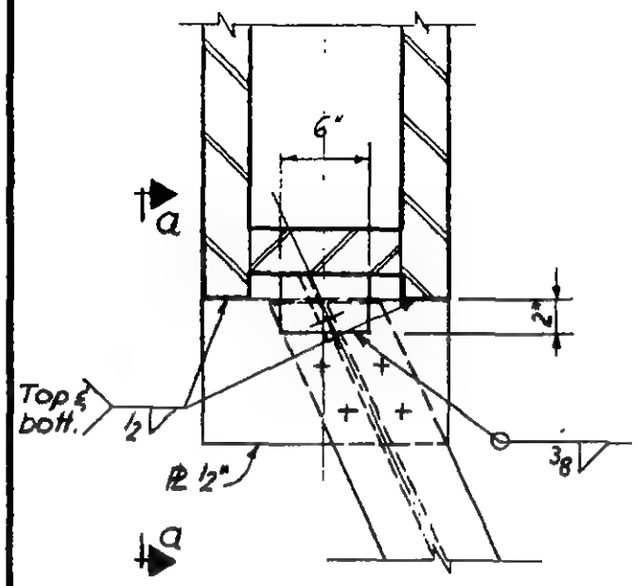

Plan

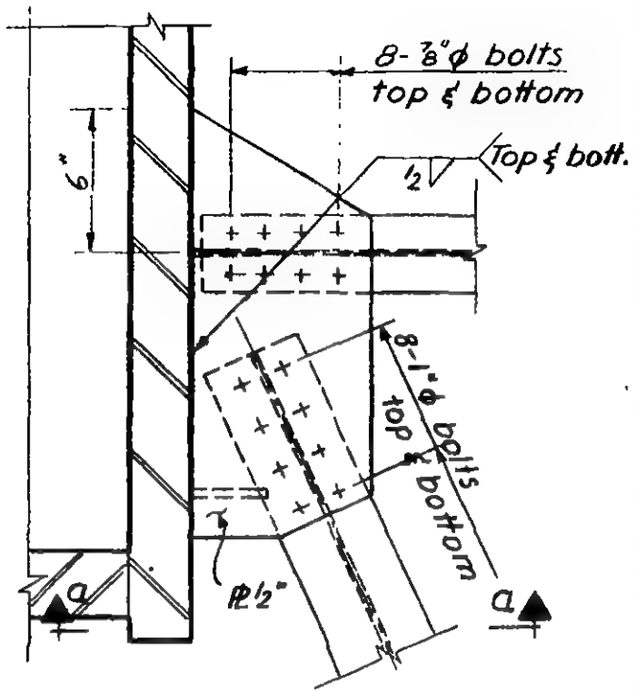

Plan

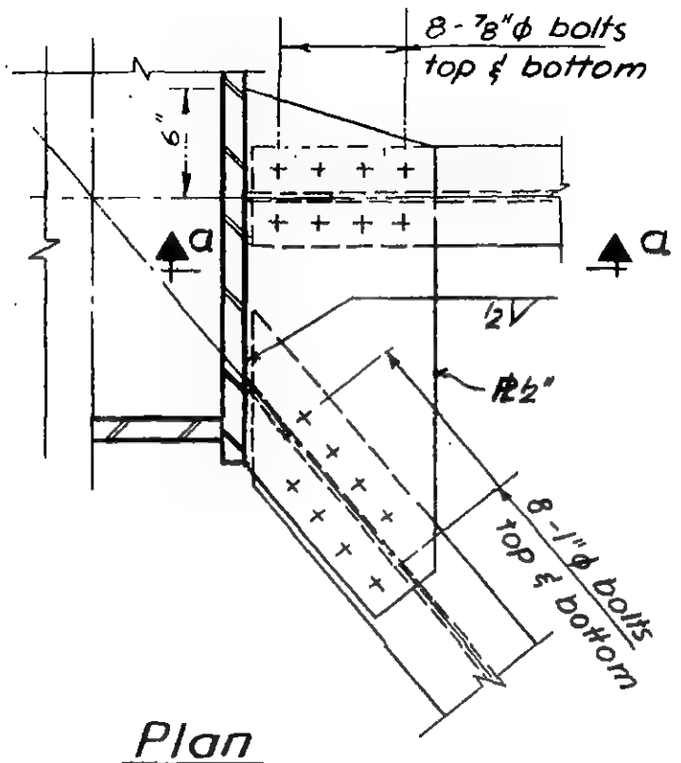

Plan

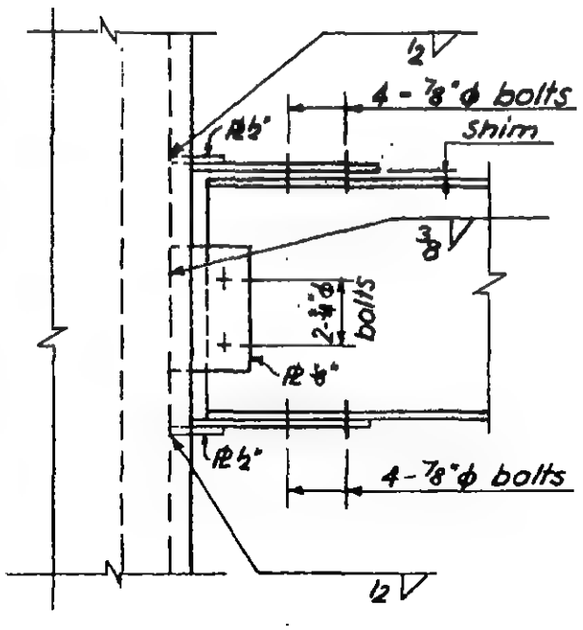

Section a-a

Detail D

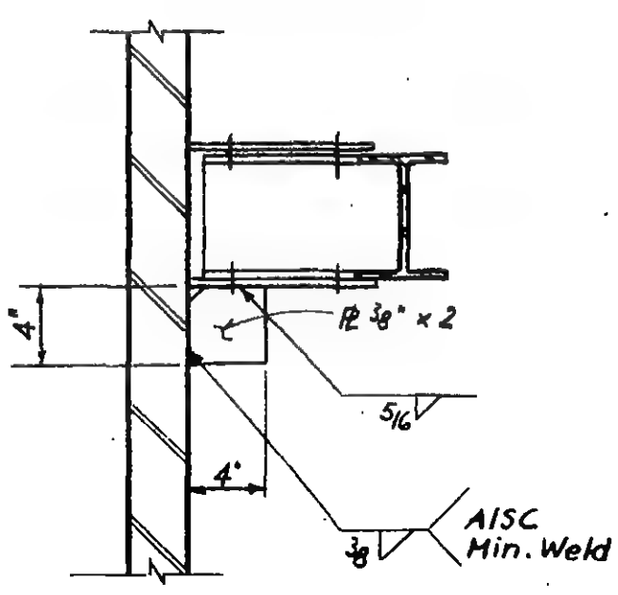

Section a-a

Detail E

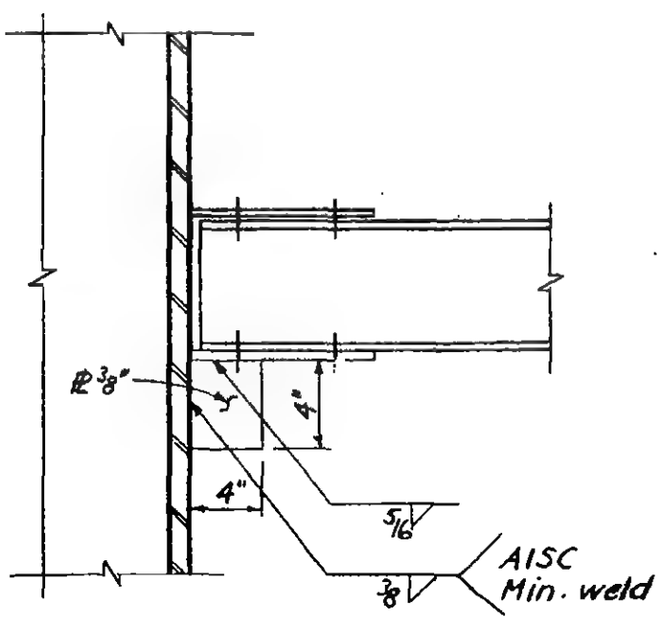

Section a-a

Detail F

6-B5-110

PROFESSIONAL ENGINEER
LOUIS E. ROBERTSON
No. 34350
UNIVERSITY OF THE STATE OF NEW YORK

SKILLING - HELLE - CHRISTIANSEN - ROBERTSON Structural & Civil Engineers

PROJECT THE WORLD TRADE CENTER | TITLE TEMPORARY BRACING DETAILS 6, H, J | DATE 2-9-68

REVISIONS

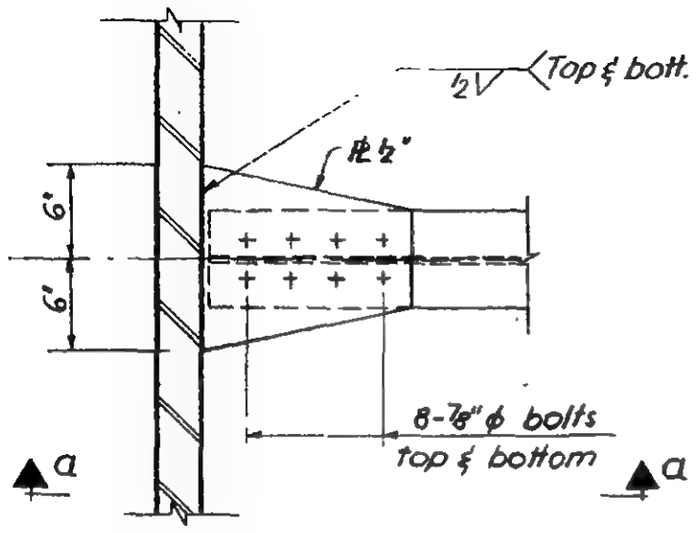

Plan

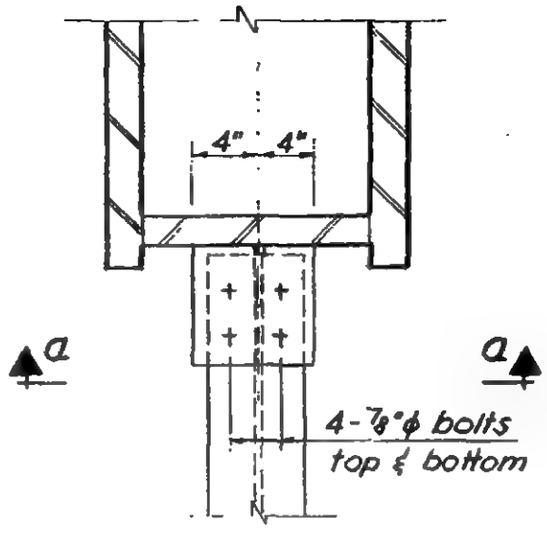

Plan

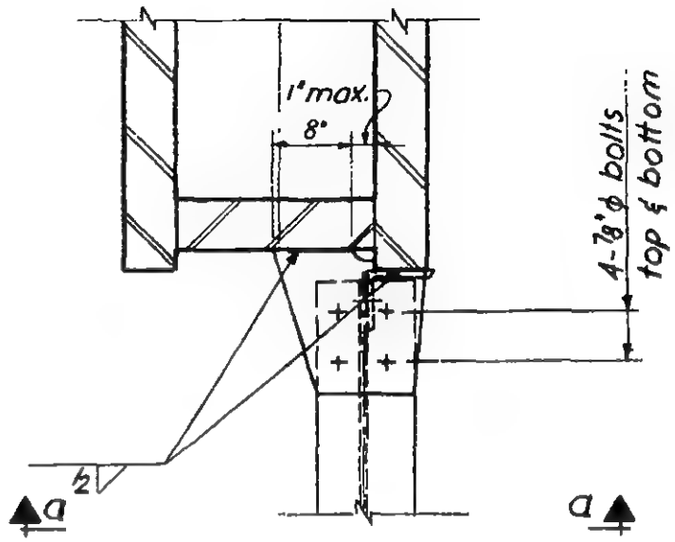

Plan

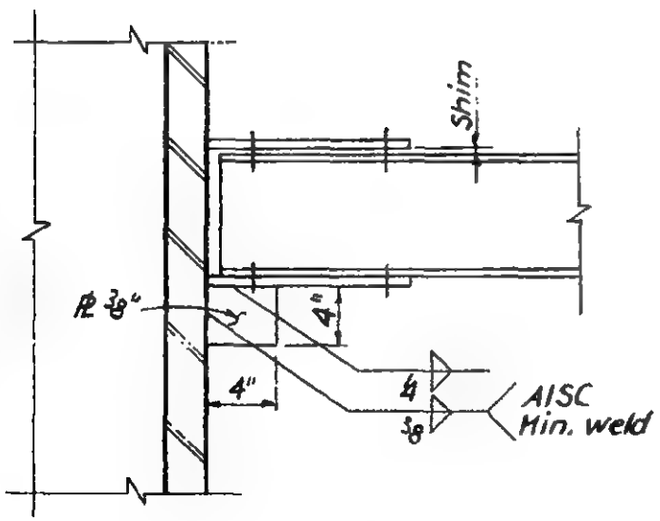

Section a-a

Detail 6

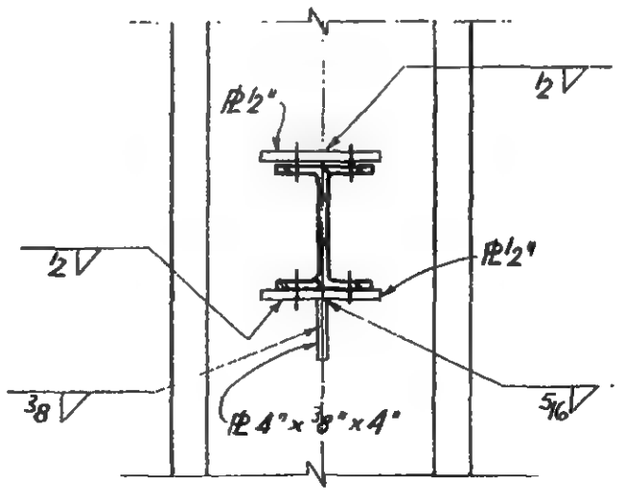

Section a-a

Detail H

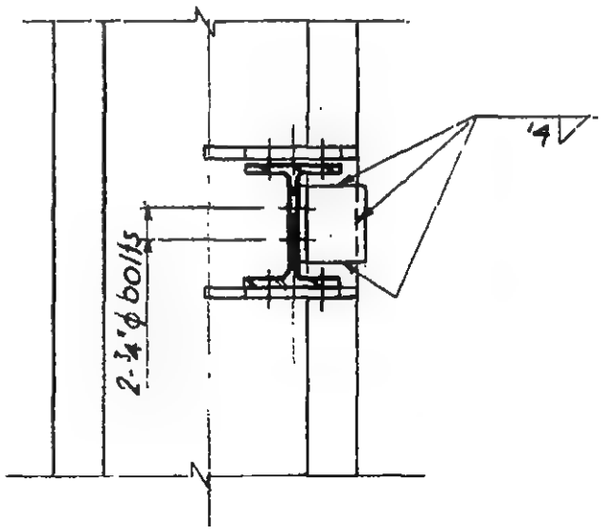

Section a-a

Detail J

LICENSED PROFESSIONAL ENGINEER
LESLIE E. ROBERTSON
NO. 34350
UNIVERSITY OF THE STATE OF NEW YORK

G-B5-111

SKILLING - HELLE - CHRISTIANSEN - ROBERTSON Structural & Civil Engineers

PROJECT THE WORLD TRADE CENTER | TITLE TEMPORARY BRACING DETAILS K, L, M | DATE 2-9-68

REVISIONS

3-11-68

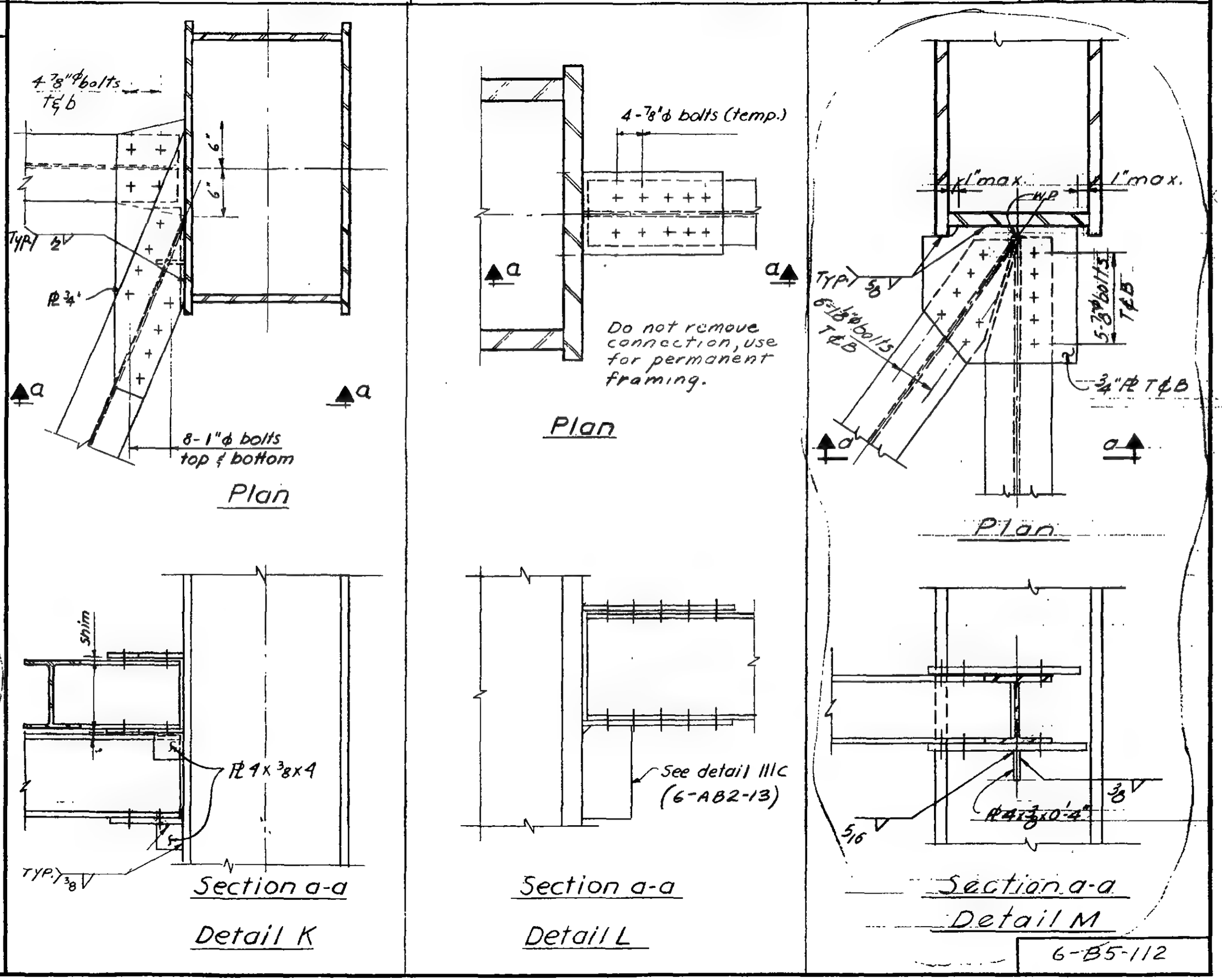

6-B5-112

SKILLING - HELLE - CHRISTIANSEN - ROBERTSON Structural & Civil Engineers

PROJECT THE WORLD TRADE CENTER | TITLE TEMPORARY COLUMN BRACING EL. 274' | DATE 3-11-68

REVISIONS

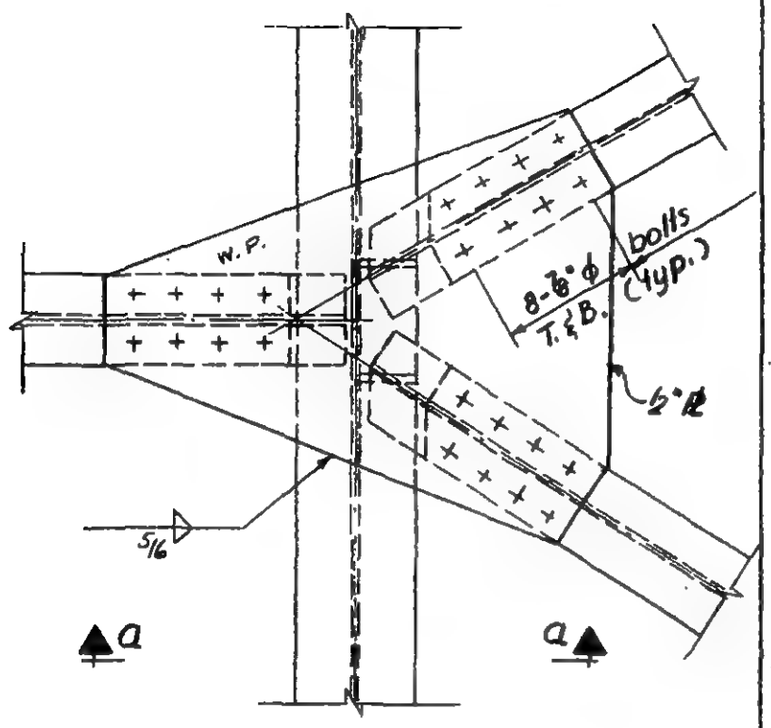

Plan

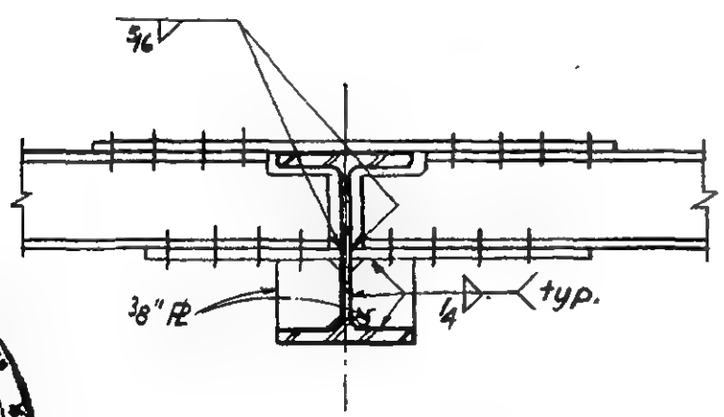

Section a-a

Detail P

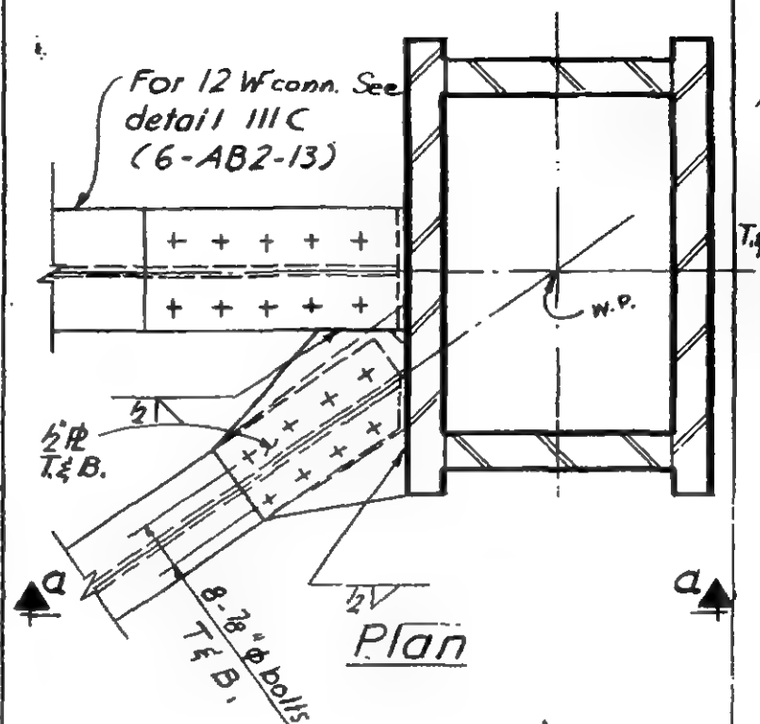

Plan

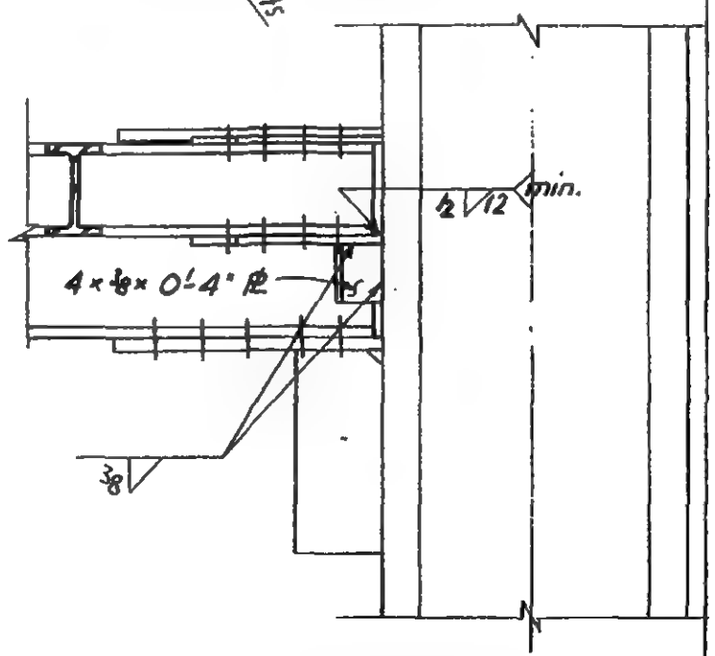

Section a-a

Detail Q

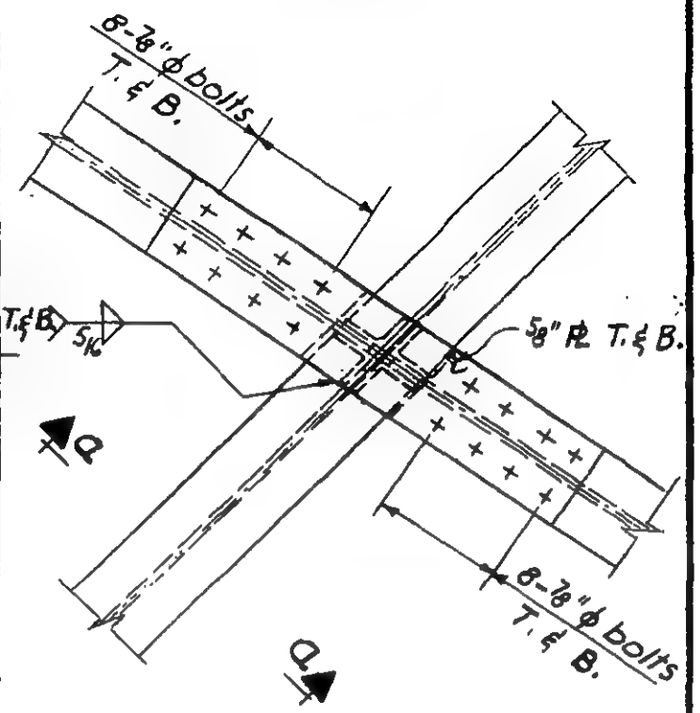

Plan

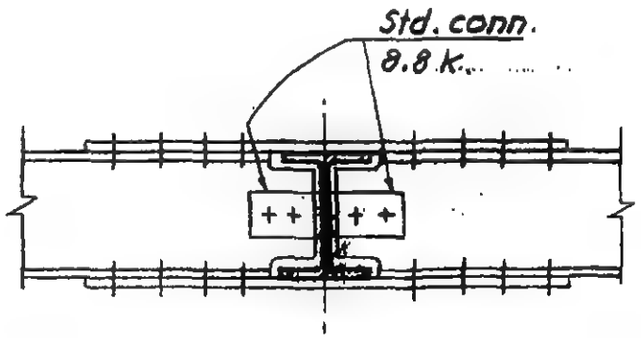

Section a-a

Detail R

LICENSED PROFESSIONAL ENGINEER
LESLIE E. ROBERTSON
No. 34360
UNIVERSITY OF THE STATE OF NEW YORK

6-B5-113

SKILLING, HELLE, CHRISTIANSEN, ROBERTSON — **Structural & Civil Engineers**

PROJECT	TITLE	DATE
THE WORLD TRADE CENTER	INTERIOR COLUMNS TO FLOOR 1	4/ 1/69

REVISIONS

Printed 5-1-69

6-AB6- 1 INDEX
6-A6- 2 SCHEDULE TOWER A
6-A6- 3 SCHEDULE TOWER A
6-A6- 4 SCHEDULE TOWER A
6-B6- 5 SCHEDULE TOWER B
6-B6- 6 SCHEDULE TOWER B
6-B6- 6 SCHEDULE TOWER B
6-B6- 7 SCHEDULE TOWER B
6-B6- 8 SCHEDULE TOWER B

REVISIONS

WORTHINGTON, SKILLING, HELLE & JACKSON Civil & Structural Engineers

PROJECT: THE WORLD TRADE CENTER | TITLE: INTERIOR COLUMNS TO FLOOR 1 | DATE: 6/12/67

COL.NO	UPR SPL STR	LWR SPL STR	COL. TYPE	B(IN)	D(IN)	SHAPE	PLATE 1 T1	PLATE 1 W1	PLATE 2 T2	PLATE 2 W2	PLATE 3 T3	PLATE 3 W3	FY	LOWER SPLICE DET.NO
500A	1	274	112	-	-	14WF 43	-	-	-	-	-	-	36	101J
500A	274	242	112	-	-	14WF 87	-	-	-	-	-	-	36	602A
509A	1	274	112	-	-	14WF 43	-	-	-	-	-	-	36	101J
509A	274	242	112	-	-	14WF 95	-	-	-	-	-	-	36	602A
1000A	1	274	112	-	-	14WF 43	-	-	-	-	-	-	36	101J
1000A	274	242	112	-	-	14WF 95	-	-	-	-	-	-	36	602A
1009A	1	274	112	-	-	14WF 48	-	-	-	-	-	-	36	101J
1009A	274	242	112	-	-	14WF103	-	-	-	-	-	-	36	602A
1100A	1	274	112	-	-	14WF 48	-	-	-	-	-	-	36	101J
1100A	274	242	112	-	-	14WF103	-	-	-	-	-	-	36	602A
1101A	1	274	112	-	-	14WF 68	-	-	-	-	-	-	36	101H
1101A	274	242	112	-	-	14WF136	-	-	-	-	-	-	36	602A
1102A	1	274	112	-	-	14WF 68	-	-	-	-	-	-	36	101H
1102A	274	242	112	-	-	14WF142	-	-	-	-	-	-	36	602A
1103A	1	274	112	-	-	14WF 68	-	-	-	-	-	-	36	101H
1103A	274	242	112	-	-	14WF142	-	-	-	-	-	-	36	602A

WORTHINGTON, SKILLING, HELLE & JACKSON Civil & Structural Engineers

PROJECT: THE WORLD TRADE CENTER | TITLE: INTERIOR COLUMNS TO FLOOR 1 | DATE: 6/12/67

REVISIONS

COL.NO	UPR SPL STR	LWR SPL STR	COL. TYPE	B(IN)	D(IN)	SHAPE	PLATE 1 T1	PLATE 1 W1	PLATE 2 T2	PLATE 2 W2	PLATE 3 T3	PLATE 3 W3	FY	LOWER SPLICE DET.NO
1104A	1	274	112	-	-	14WF 68	-	-	-	-	-	-	36	101H
1104A	274	242	112	-	-	14WF142	-	-	-	-	-	-	36	602A
1105A	1	274	112	-	-	14WF 68	-	-	-	-	-	-	36	101H
1105A	274	242	112	-	-	14WF142	-	-	-	-	-	-	36	602A
1106A	1	274	112	-	-	14WF 68	-	-	-	-	-	-	36	101H
1106A	274	242	112	-	-	14WF142	-	-	-	-	-	-	36	602A
1107A	1	274	112	-	-	14WF 68	-	-	-	-	-	-	36	101H
1107A	274	242	112	-	-	14WF142	-	-	-	-	-	-	36	602A
1108A	1	274	112	-	-	14WF 78	-	-	-	-	-	-	36	101H
1108A	274	242	112	-	-	14WF150	-	-	-	-	-	-	36	602A
1109A	1	274	112	-	-	14WF 61	-	-	-	-	-	-	36	101H
1109A	274	242	112	-	-	14WF119	-	-	-	-	-	-	36	602A
1200A	1	274	112	-	-	14WF 61	-	-	-	-	-	-	36	101H
1200A	274	242	112	-	-	14WF119	-	-	-	-	-	-	36	602A
1201A	1	274	112	-	-	14WF 68	-	-	-	-	-	-	36	101H
1201A	274	242	112	-	-	14WF142	-	-	-	-	-	-	36	602A

REVISIONS

WORTHINGTON, SKILLING, HELLE & JACKSON Civil & Structural Engineers

PROJECT: THE WORLD TRADE CENTER | TITLE: INTERIOR COLUMNS TO FLOOR 1 | DATE: 6/12/67

COL.NO	UPR SPL STR	LWR SPL STR	COL. TYPE	B(IN)	D(IN)	SHAPE	PLATE 1 T1	PLATE 1 W1	PLATE 2 T2	PLATE 2 W2	PLATE 3 T3	PLATE 3 W3	FY	LOWER SPLICE DET.NO
1202A	1	274	112	-	-	14WF 68	-	-	-	-	-	-	36	101H
1202A	274	242	112	-	-	14WF142	-	-	-	-	-	-	36	602A
1203A	1	274	112	-	-	14WF 68	-	-	-	-	-	-	36	101H
1203A	274	242	112	-	-	14WF142	-	-	-	-	-	-	36	602A
1204A	1	274	112	-	-	14WF 68	-	-	-	-	-	-	36	101H
1204A	274	242	112	-	-	14WF142	-	-	-	-	-	-	36	602A
1205A	1	274	112	-	-	14WF 68	-	-	-	-	-	-	36	101H
1205A	274	242	112	-	-	14WF142	-	-	-	-	-	-	36	602A
1206A	1	274	112	-	-	14WF 68	-	-	-	-	-	-	36	101H
1206A	274	242	112	-	-	14WF142	-	-	-	-	-	-	36	602A
1207A	1	274	112	-	-	14WF 68	-	-	-	-	-	-	36	101H
1207A	274	242	112	-	-	14WF142	-	-	-	-	-	-	36	602A
1208A	1	274	112	-	-	14WF 61	-	-	-	-	-	-	36	101H
1208A	274	242	112	-	-	14WF119	-	-	-	-	-	-	36	602A
1209A	1	274	112	-	-	14WF 61	-	-	-	-	-	-	36	101H
1209A	274	242	112	-	-	14WF136	-	-	-	-	-	-	36	602A

WORTHINGTON, SKILLING, HELLE & JACKSON — Civil & Structural Engineers

PROJECT: THE WORLD TRADE CENTER | TITLE: INTERIOR COLUMNS TO FLOOR 1 | DATE: 2/12/68

REVISIONS

COL.NO	UPR SPL STR	LWR SPL STR	COL. TYPE	B(IN)	D(IN)	SHAPE	PLATE 1 T1	PLATE 1 W1	PLATE 2 T2	PLATE 2 W2	PLATE 3 T3	PLATE 3 W3	FY	LOWER SPLICE DET.NO
500B	1	274	112	-	-	14WF 53	-	-	-	-	-	-	36	101J
500B	274	242	112	-	-	14WF 87	-	-	-	-	-	-	36	602A
509B	1	274	112	-	-	14WF 53	-	-	-	-	-	-	36	101J
509B	274	242	112	-	-	14WF 87	-	-	-	-	-	-	36	602A
1000B	1	274	112	-	-	14WF 53	-	-	-	-	-	-	36	101J
1000B	274	243	112	-	-	14WF 87	-	-	-	-	-	-	36	602B
1100B	1	274	112	-	-	14WF 61	-	-	-	-	-	-	36	101H
1100B	274	242	112	-	-	14WF103	-	-	-	-	-	-	36	602A
1101B	1	274	112	-	-	14WF 74	-	-	-	-	-	-	36	101H
1101B	274	242	112	-	-	14WF127	-	-	-	-	-	-	36	602A
1102B	1	274	112	-	-	14WF 78	-	-	-	-	-	-	36	101H
1102B	274	242	112	-	-	14WF136	-	-	-	-	-	-	36	602A
1103B	1	274	112	-	-	14WF 78	-	-	-	-	-	-	36	101H
1103B	274	242	112	-	-	14WF136	-	-	-	-	-	-	36	602A
1104B	1	274	112	-	-	14WF 78	-	-	-	-	-	-	36	101H
1104B	274	242	112	-	-	14WF136	-	-	-	-	-	-	36	602A

LICENSED PROFESSIONAL ENGINEER — LESLIE E. ROBERTSON — No. 34360 — UNIVERSITY OF THE STATE OF NEW YORK

REVISIONS

WORTHINGTON, SKILLING, HELLE & JACKSON Civil & Structural Engineers

PROJECT: THE WORLD TRADE CENTER | TITLE: INTERIOR COLUMNS TO FLOOR 1 | DATE: 2/12/68

COL.NO	UPR SPL STR	LWR SPL STR	COL. TYPE	B(IN)	D(IN)	SHAPE	PLATE 1 T1	PLATE 1 W1	PLATE 2 T2	PLATE 2 W2	PLATE 3 T3	PLATE 3 W3	FY	LOWER SPLICE DET.NO
11058	1	274	112	-	-	14WF 78	-	-	-	-	-	-	36	101H
11058	274	242	112	-	-	14WF136	-	-	-	-	-	-	36	602A
11068	1	274	112	-	-	14WF 87	-	-	-	-	-	-	36	101H
11068	274	242	112	-	-	14WF167	-	-	-	-	-	-	36	602A
11078	1	274	112	-	-	14WF 84	-	-	-	-	-	-	36	101H
11078	274	242	112	-	-	14WF158	-	-	-	-	-	-	36	602A
11088	1	274	112	-	-	14WF 61	-	-	-	-	-	-	36	101H
11088	274	242	112	-	-	14WF103	-	-	-	-	-	-	36	602A
11098	1	274	112	-	-	14WF 61	-	-	-	-	-	-	36	101H
11098	274	242	112	-	-	14WF103	-	-	-	-	-	-	36	602A
12008	1	274	112	-	-	14WF 61	-	-	-	-	-	-	36	101H
12008	274	243	112	-	-	14WF 87	-	-	-	-	-	-	36	602B
12018	1	274	112	-	-	14WF 61	-	-	-	-	-	-	36	101H
12018	274	243	112	-	-	14WF111	-	-	-	-	-	-	36	602B
12028	1	274	112	-	-	14WF 78	-	-	-	-	-	-	36	101H
12028	274	243	112	-	-	14WF158	-	-	-	-	-	-	36	602B

LICENSED PROFESSIONAL ENGINEER LESLIE E. ROBERTSON No. 34360 UNIVERSITY OF THE STATE OF NEW YORK

REVISIONS

WORTHINGTON, SKILLING, HELLE & JACKSON Civil & Structural Engineers

PROJECT: THE WORLD TRADE CENTER | TITLE: INTERIOR COLUMNS TO FLOOR 1 | DATE: 2/12/68

COL.NO	UPR SPL STR	LWR SPL STR	COL. TYPE	B(IN)	D(IN)	SHAPE	PLATE 1 T1	PLATE 1 W1	PLATE 2 T2	PLATE 2 W2	PLATE 3 T3	PLATE 3 W3	FY	LOWER SPLICE DET.NO
1203B	1	274	112	-	-	14WF 78	-	-	-	-	-	-	36	101H
1203B	274	243	112	-	-	14WF158	-	-	-	-	-	-	36	602B
1204B	1	274	112	-	-	14WF 78	-	-	-	-	-	-	36	101H
1204B	274	243	112	-	-	14WF158	-	-	-	-	-	-	36	602B
1205B	1	274	112	-	-	14WF 95	-	-	-	-	-	-	36	101H
1205B	274	243	112	-	-	14WF167	-	-	-	-	-	-	36	602B
1206B	1	274	112	-	-	14WF119	-	-	-	-	-	-	36	101H
1206B	274	243	112	-	-	14WF246	-	-	-	-	-	-	36	602B
1207B	1	274	112	-	-	14WF119	-	-	-	-	-	-	36	101H *
1207B	274	243	112	-	-	14WF314	-	-	-	-	-	-	36	602B
1208B	1	274	112	-	-	14WF 74	-	-	-	-	-	-	36	101H
1208B	274	243	112	-	-	14WF111	-	-	-	-	-	-	36	602B
1300B	1	274	112	-	-	14WF 61	-	-	-	-	-	-	36	101H
1300B	274	243	112	-	-	14WF 87	-	-	-	-	-	-	36	602B
1301B	1	274	112	-	-	12WF 65	-	-	-	-	-	-	36	101H
1301B	274	243	112	-	-	12WF 99	-	-	-	-	-	-	36	602B

* SPLICE, 4'-6" ABOVE REFERENCE FLOOR

LICENSED PROFESSIONAL ENGINEER LESLIE E. ROBERTSON No. 34360 UNIVERSITY OF THE STATE OF NEW YORK

WORTHINGTON, SKILLING, HELLE & JACKSON — Civil & Structural Engineers

PROJECT: THE WORLD TRADE CENTER | TITLE: INTERIOR COLUMNS TO FLOOR 1 | DATE: 2-12-68

REVISIONS
3-11-68

COL.NO	UPR SPL STR	LWR SPL STR	COL. TYPE	B(IN)	D(IN)	SHAPE	PLATE 1 T1	PLATE 1 W1	PLATE 2 T2	PLATE 2 W2	PLATE 3 T3	PLATE 3 W3	FY	LOWER SPLICE DET.NO
1308B	1	284	112	-	-	14WF95	-	-	-	-	-	-	36	101H
1308B	284	264	112	-	-	14WF228	-	-	-	-	-	-	36	102A
1808B	264	243	112	-	-	14WF228	-	-	-	-	-	-	36	602B
1405B	284	274	112	-	-	14WF 84	-	-	-	-	-	-	36	101H
1405B	274	243	112	-	-	14WF150	-	-	-	-	-	-	36	602B
1406B	1	274	112	-	-	14WF 84	-	-	-	-	-	-	36	101H
1406B	274	264	112	-	-	14WF150	-	-	-	-	-	-	36	216A
1406B	264	243	216	-	-	12WF 36	1-3/16	16	-	-			36	602B
1407B	1	284	112	-	-	14WF 84	-	-	-	-	-	-	36	101H
1407B	284	243	112	-	-	14WF193	-	-	-	-	-	-	36	602B
1408B	1	274	112	-	-	14WF 95	-	-	-	-	-	-	36	101H
1408B	274	243	112	-	-	14WF193	-	-	-	-	-	-	36	602B

LICENSED PROFESSIONAL ENGINEER
LESLIE E. ROBERTSON
No. 34360
UNIVERSITY OF THE STATE OF NEW YORK

6-86- 8

SKILLING, HELLE, CHRISTIANSEN, ROBERTSON — Structural & Civil Engineers

PROJECT	TITLE	DATE
THE WORLD TRADE CENTER	DRAWING BOOK 6 - BEAM CONNECTIONS AND MISC. DETAILS	4/ 1/69

EVISIONS

Printed 5-1-69

6-AB7-2 SHEAR PLATE DET.
6-AB7-2.1 SHEAR PLATE DET.
6-AB7-2.2 SHEAR PLATE DET.
6-AB7-2.3 SHEAR PLATE DET.
6-AB7-2.4 SHEAR PLATE DET.
6-AB7-2.5 SHEAR PLATE DET.
6-AB7-2.6 SHEAR PLATE DET.
6-AB7-2.7 SHEAR PLATE DET.
6-AB7-2.8 SHEAR PLATE DET.
6-AB7-2.9 SHEAR PLATE DET.
6-AB7-2.10 SHEAR PLATE DET.
6-AB7-2.11 SHEAR PLATE DET.
6-AB7-3 SHEAR PLATE DET.
6-AB7-4 SHEAR PLATE DET.
6-AB7-5 SHEAR PLATE DET.
6-AB7-5.1 SHEAR PLATE DET.
6-AB7-5.2 SHEAR PLATE DET.
6-AB7-6 SHEAR PLATE DET.
6-AB7-7 SHEAR PLATE DET.
6-AB7-8 SHEAR PLATE DET.
6-AB7-9 SHEAR PLATE DET.

89

SKILLING - HELLE - CHRISTIANSEN - ROBERTSON Structural & Civil Engineers

PROJECT THE WORLD TRADE CENTER | TITLE SHEAR PLATE DETAIL | DATE 8-5-67

REVISIONS

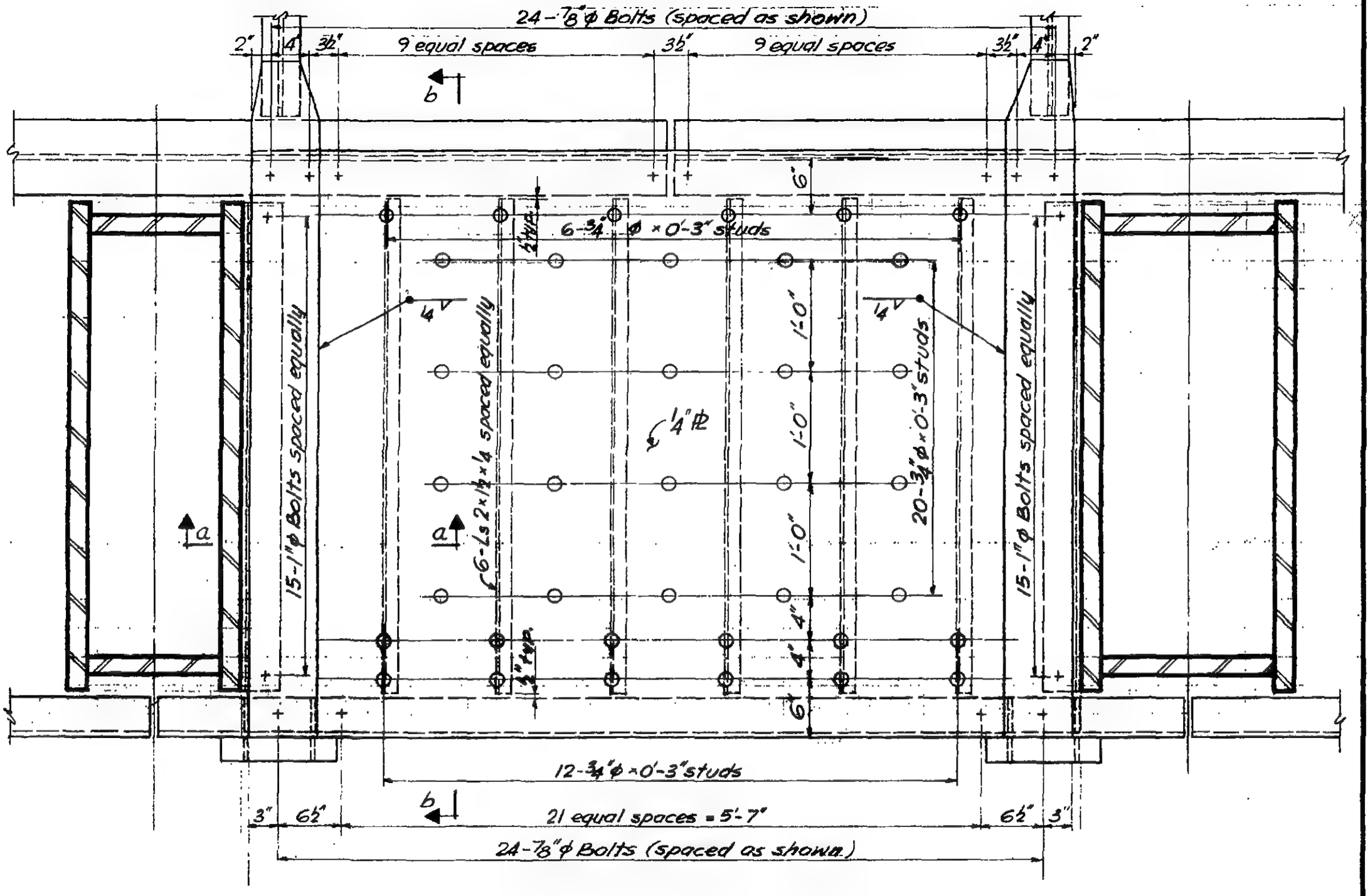

6-AB7-2

SKILLING - HELLE - CHRISTIANSEN - ROBERTSON Structural & Civil Engineers

PROJECT THE WORLD TRADE CENTER | TITLE SHEAR PLATE DETAIL | DATE 8-5-67

REVISIONS

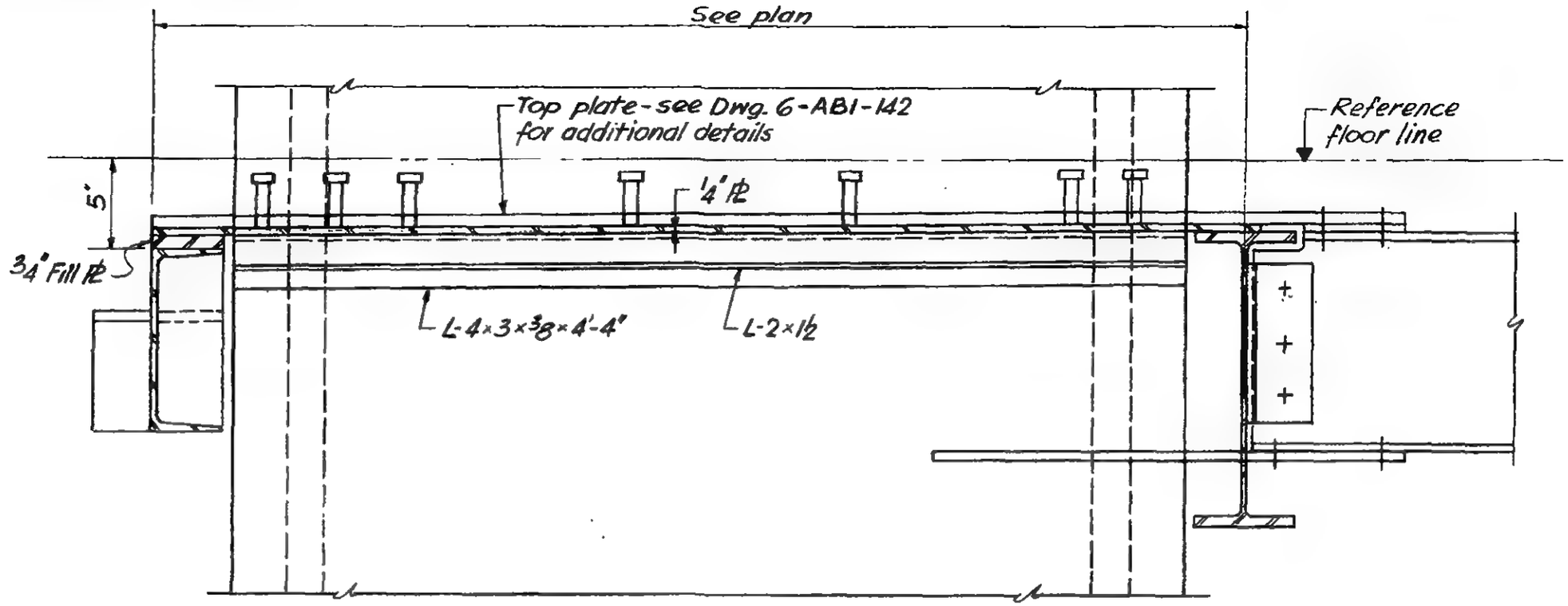

Section b-b

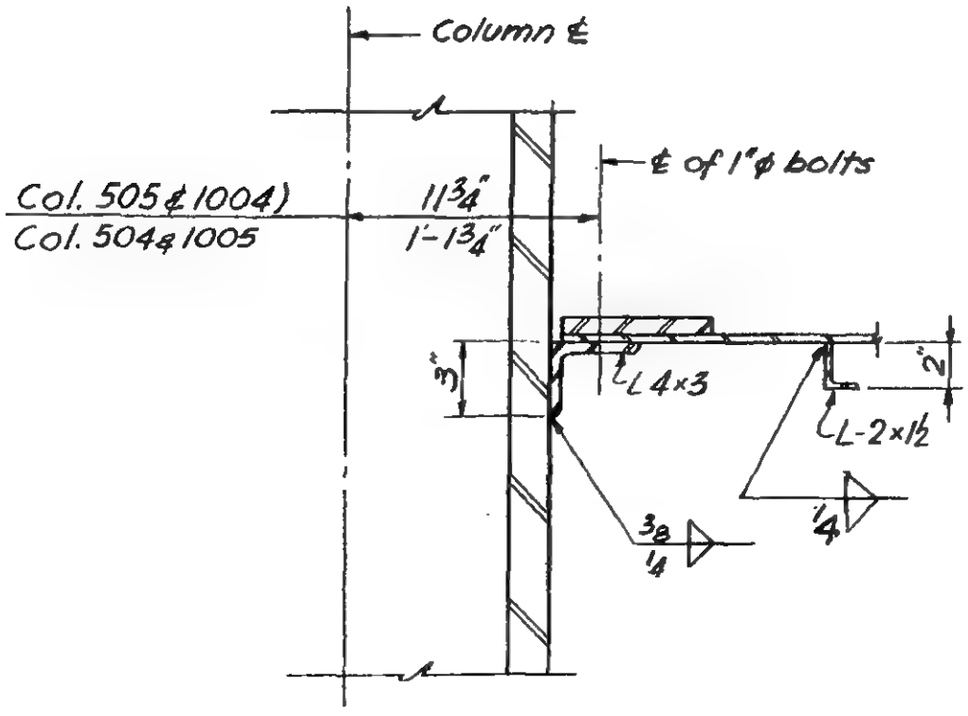

Section a-a

6-AB7-2.1

SKILLING - HELLE - CHRISTIANSEN - ROBERTSON Structural & Civil Engineers

PROJECT THE WORLD TRADE CENTER | TITLE SHEAR PLATE DETAIL | DATE 9-15-67

EVISIONS

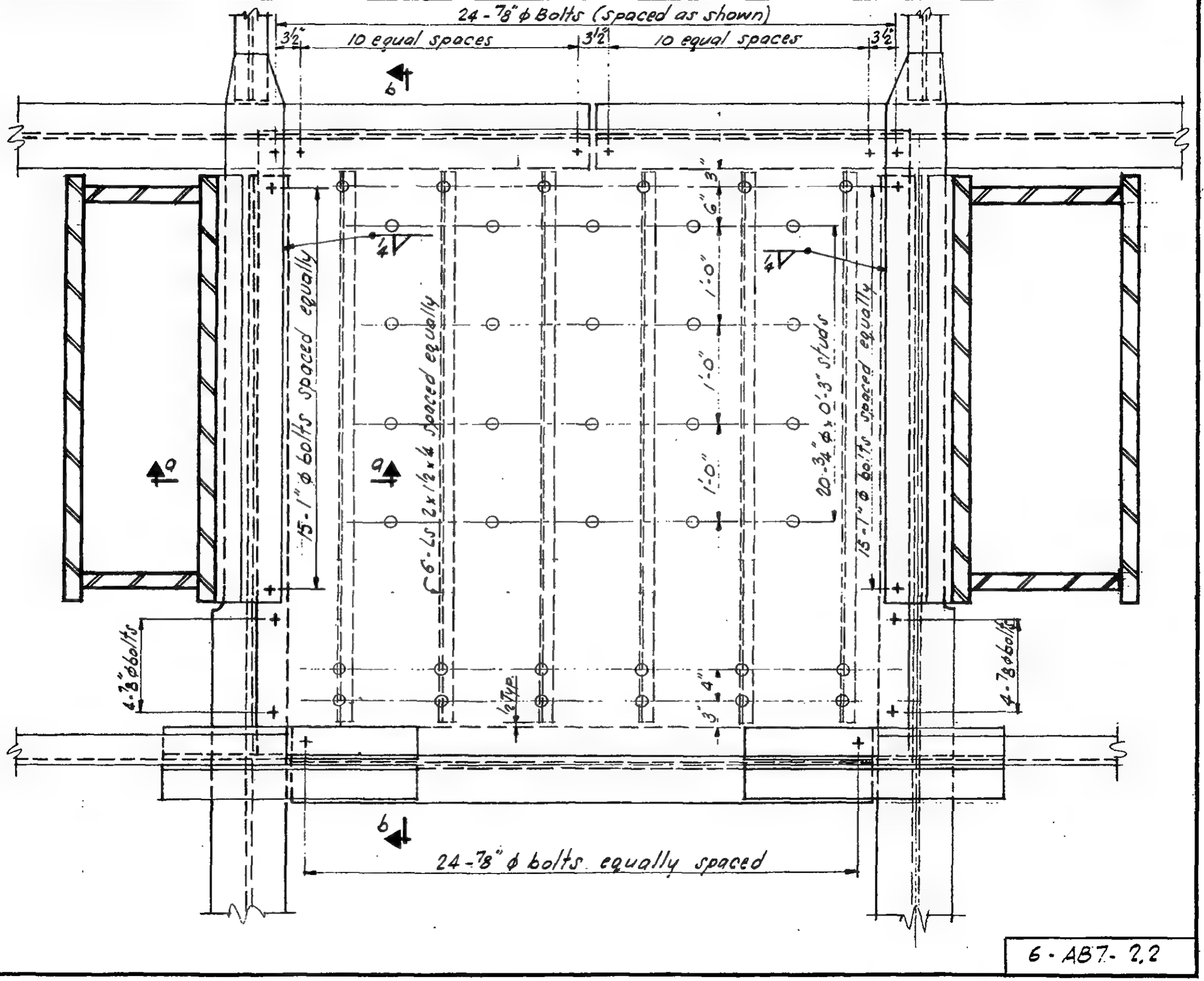

6 - AB7 - 2.2

SKILLING - HELLE - CHRISTIANSEN - ROBERTSON Structural & Civil Engineers

PROJECT THE WORLD TRADE CENTER | TITLE SHEAR PLATE DETAIL | DATE 9-16-67

REVISIONS

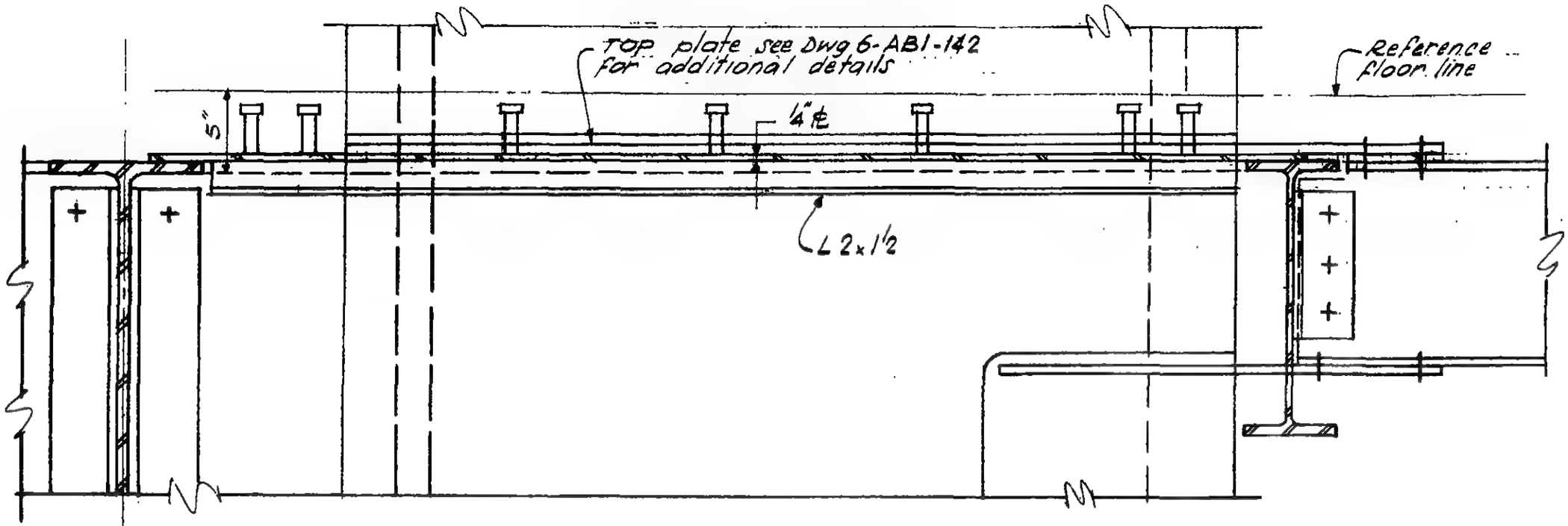

Section b-b

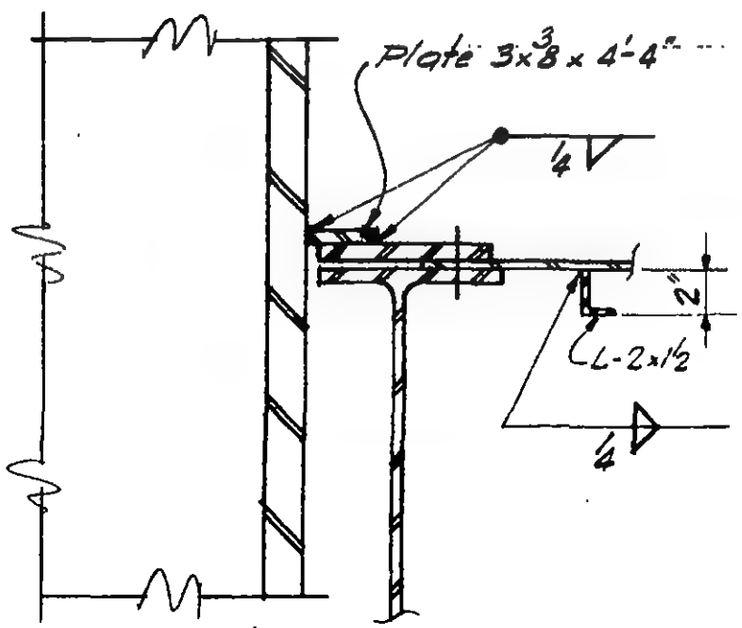

Section a-a

6-AB7-2.3

SKILLING, HELLE, CHRISTIANSEN, ROBERTSON — Structural & Civil Engineers

PROJECT THE WORLD TRADE CENTER | TITLE SHEAR PLATE DETAIL FLOORS 58-74, 78-80 | DATE 9-27-68

VISIONS

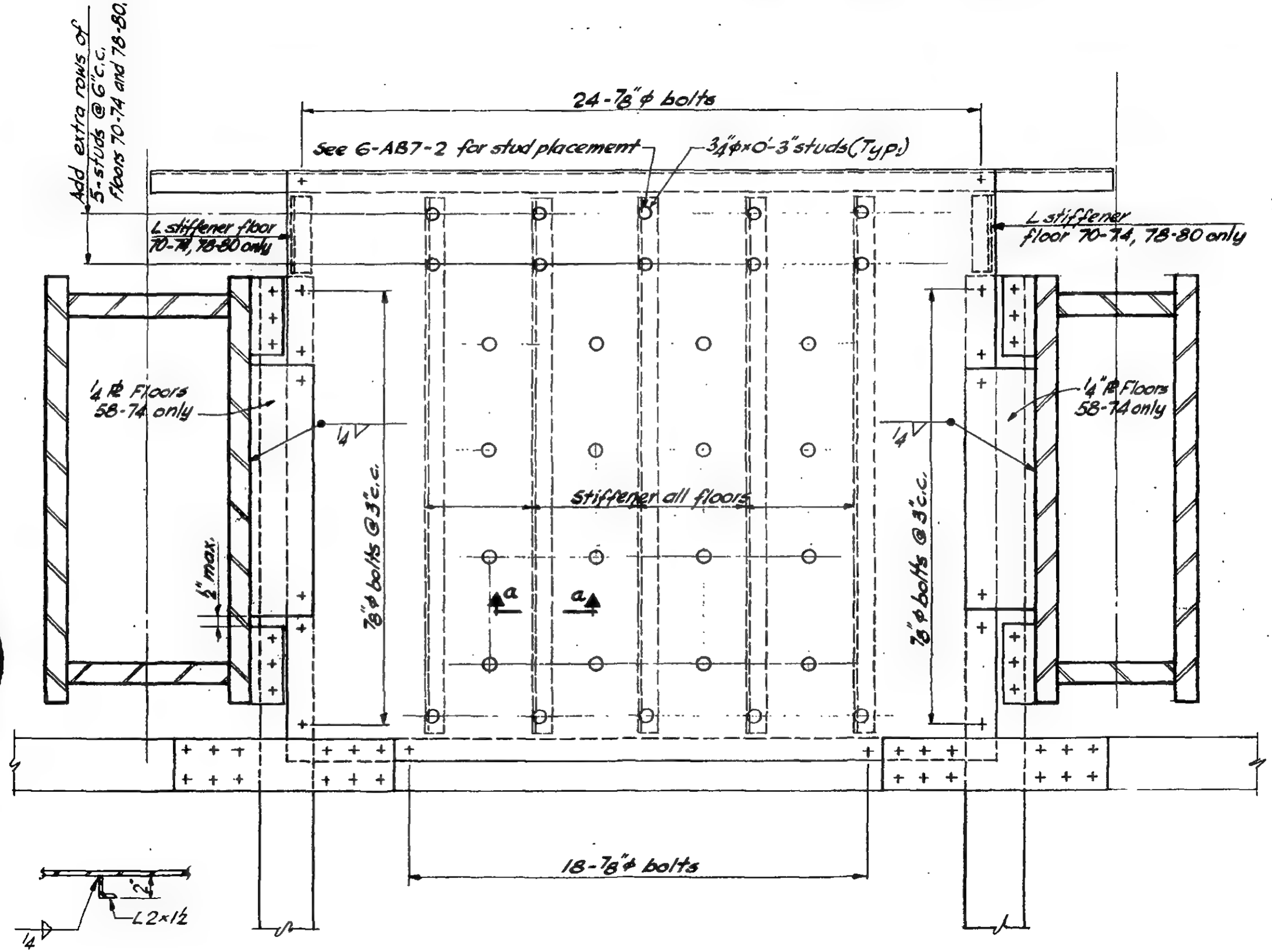

Section a-a

LICENSED PROFESSIONAL ENGINEER — LESLIE E. ROBERTSON — No. 34360 — STATE OF NEW YORK

DESIGNED

DRAWN

REVIEWED

6-AB7-2.4

SKILLING - HELLE - CHRISTIANSEN - ROBERTSON Structural & Civil Engineers

PROJECT THE WORLD TRADE CENTER | TITLE SHEAR PLATE DETAIL 7th FLOOR | DATE 11/24/67

REVISIONS

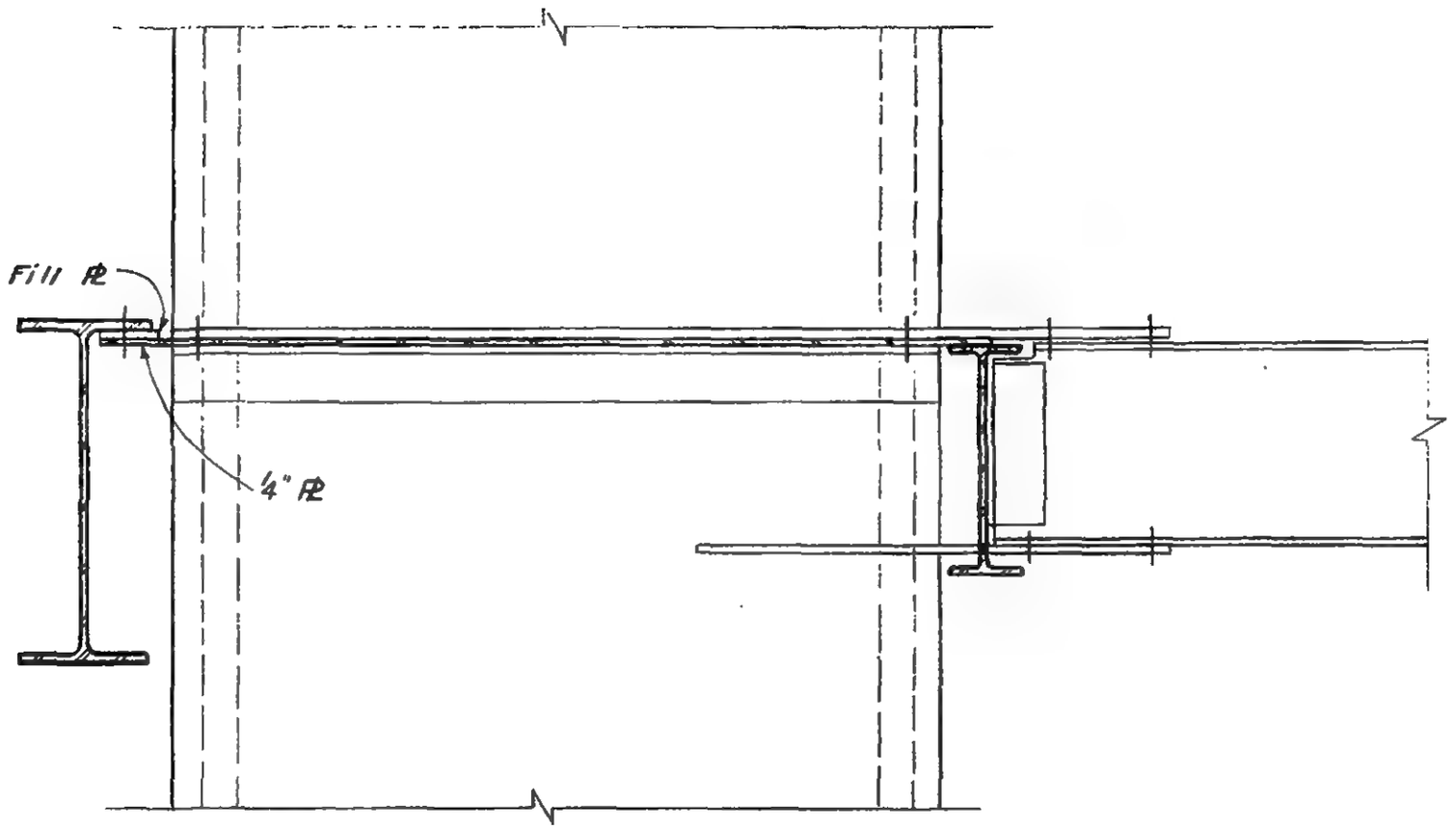

Section d-d

LICENSED PROFESSIONAL ENGINEER
LESLIE E. ROBERTSON
No. 34360
UNIVERSITY OF THE STATE OF NEW YORK

6-AB7-2.5

SKILLING - HELLE - CHRISTIANSEN - ROBERTSON Structural & Civil Engineers

PROJECT THE WORLD TRADE CENTER | TITLE SHEAR PLATE AT 44TH. FLOOR | DATE 1-24-68

REVISIONS

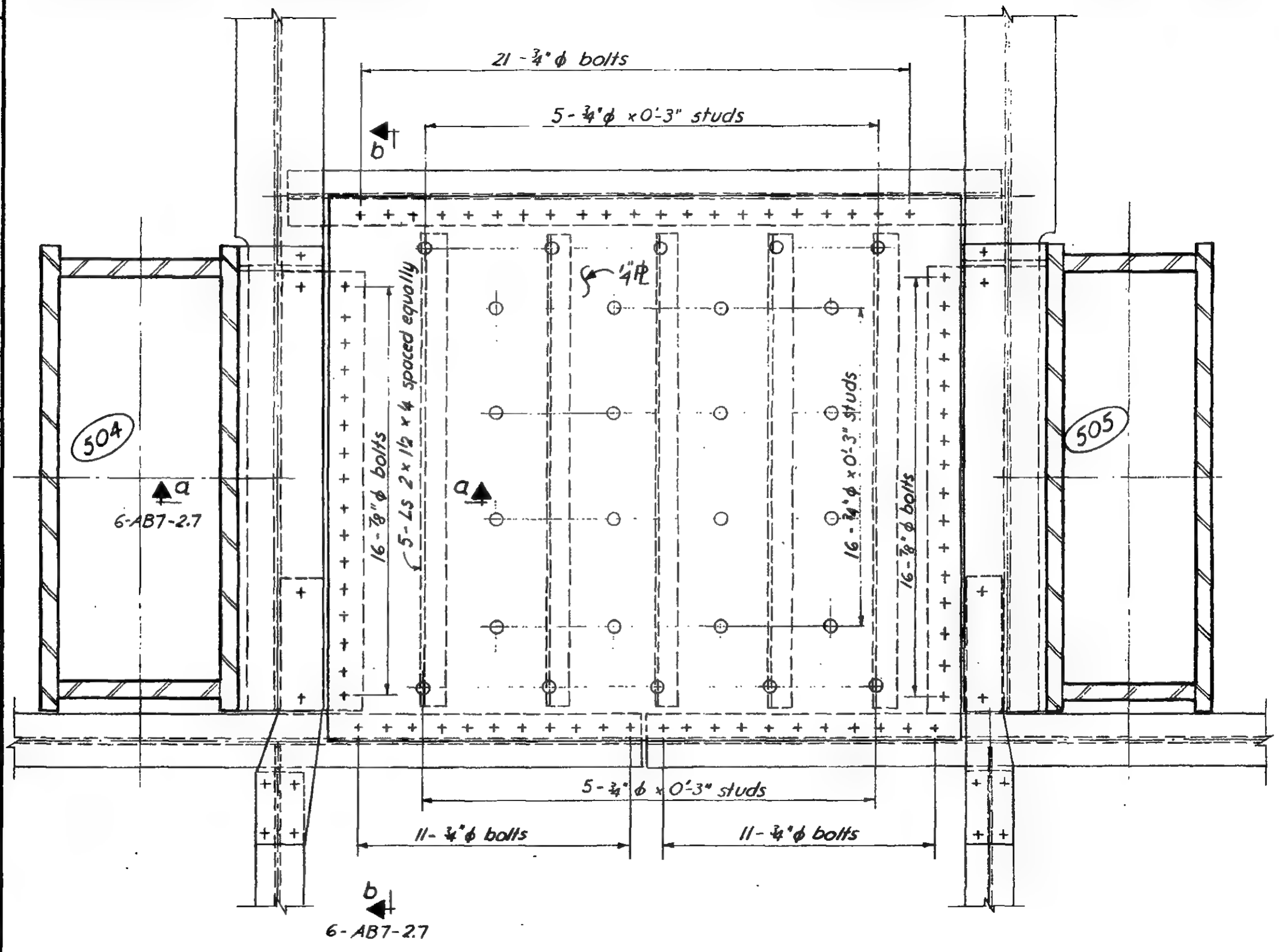

LICENSED PROFESSIONAL ENGINEER
LESLIE E. ROBERTSON
No. 34360
UNIVERSITY OF THE STATE OF N.Y.

6-AB7-2.6

SKILLING - HELLE - CHRISTIANSEN - ROBERTSON Structural & Civil Engineers

PROJECT THE WORLD TRADE CENTER | TITLE SHEAR PLATE AT 44TH. FLOOR - SECTIONS | DATE 1-24-68

REVISIONS

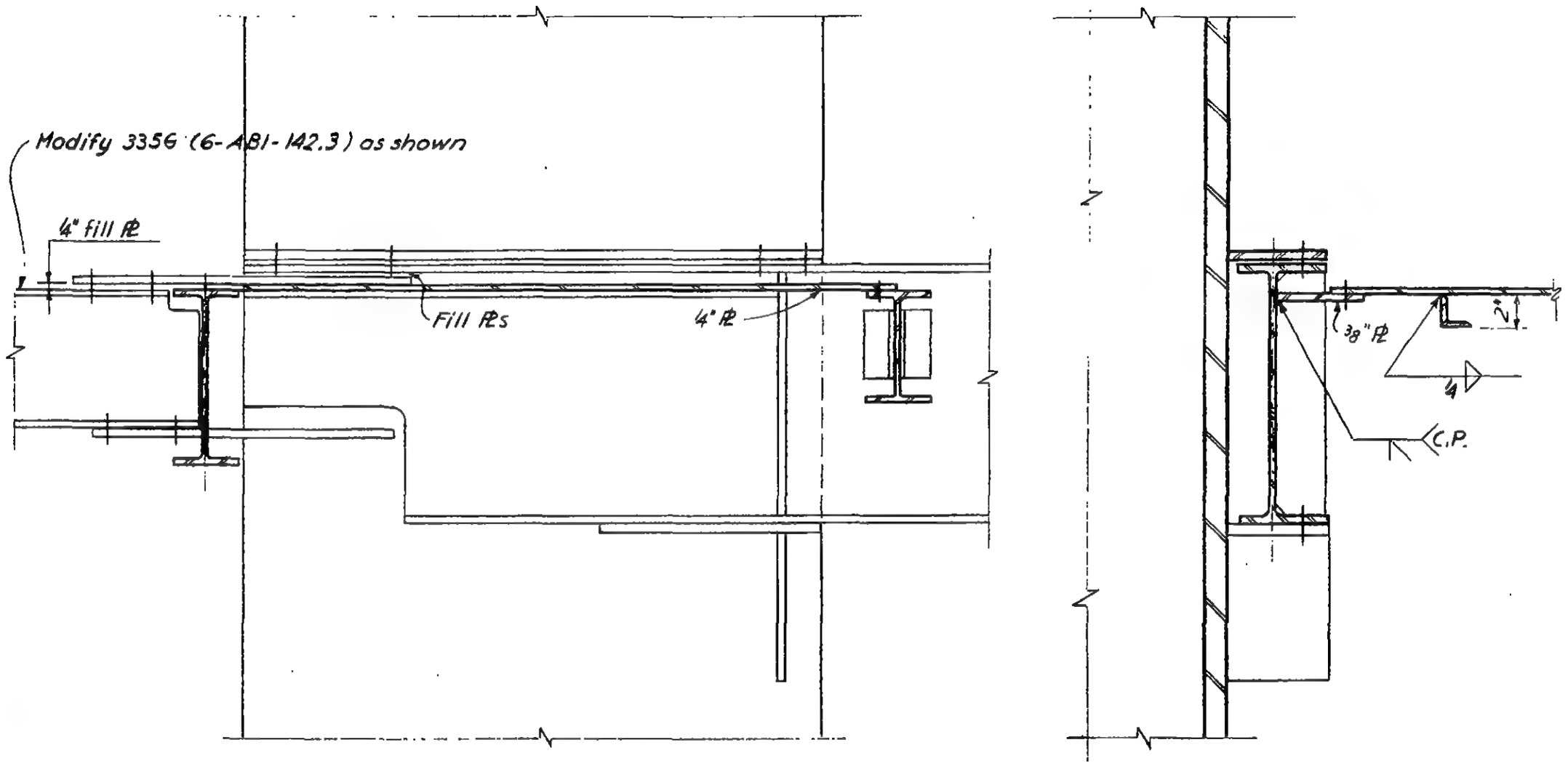

For details not shown
see 202 D (6-AB1-5.2)
and 3356 (6-AB1-142.3)

Section b-b

Section a-a

LICENSED PROFESSIONAL ENGINEER
LESLIE E. ROBERTSON
No. 34360
UNIVERSITY OF THE STATE OF NEW YORK

6-AB7-2.7

SKILLING - HELLE - CHRISTIANSEN - ROBERTSON — Structural & Civil Engineers

PROJECT THE WORLD TRADE CENTER | TITLE SHEAR PLATE AT 75TH & 77TH FLOOR | DATE 2-21-68

REVISIONS

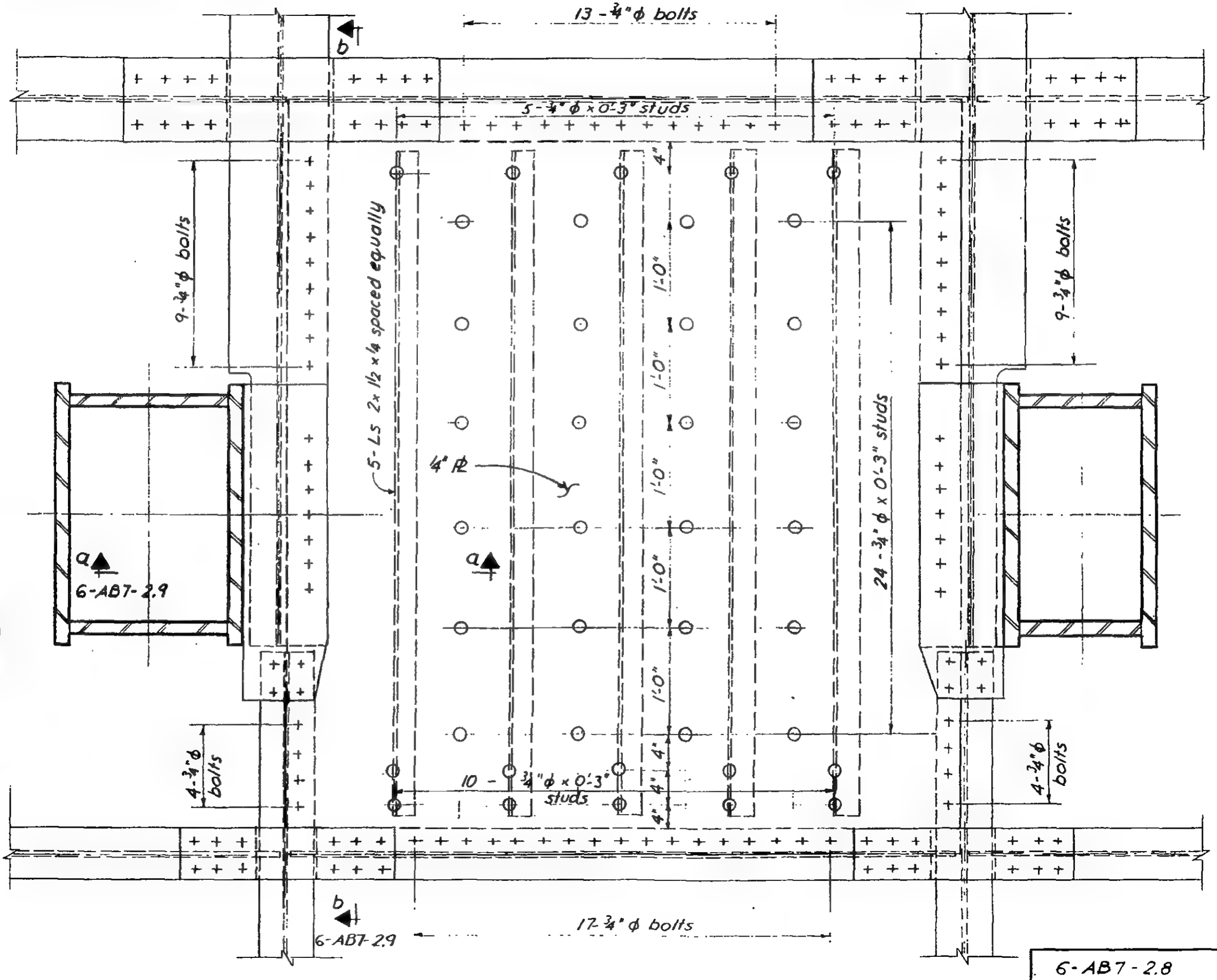

LICENSED PROFESSIONAL ENGINEER
LESLIE E. ROBERTSON
No. 34360
UNIVERSITY OF THE STATE OF NEW YORK

6 - AB7 - 2.8

SKILLING - HELLE - CHRISTIANSEN - ROBERTSON Structural & Civil Engineers

PROJECT THE WORLD TRADE CENTER | TITLE SHEAR PLATE AT 75TH & 77TH FLOOR - SECTIONS | DATE 2-21-68

REVISIONS

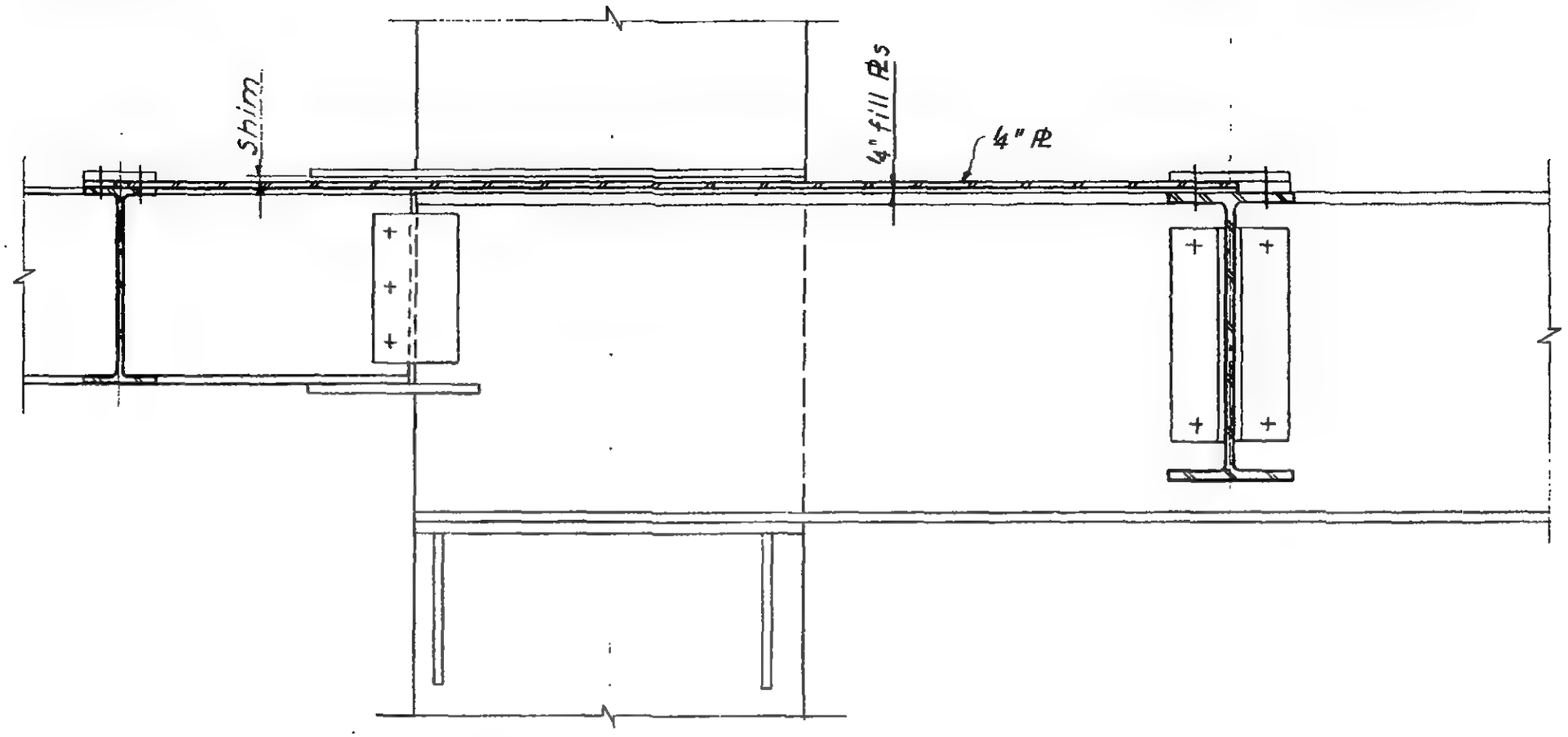

Section b-b

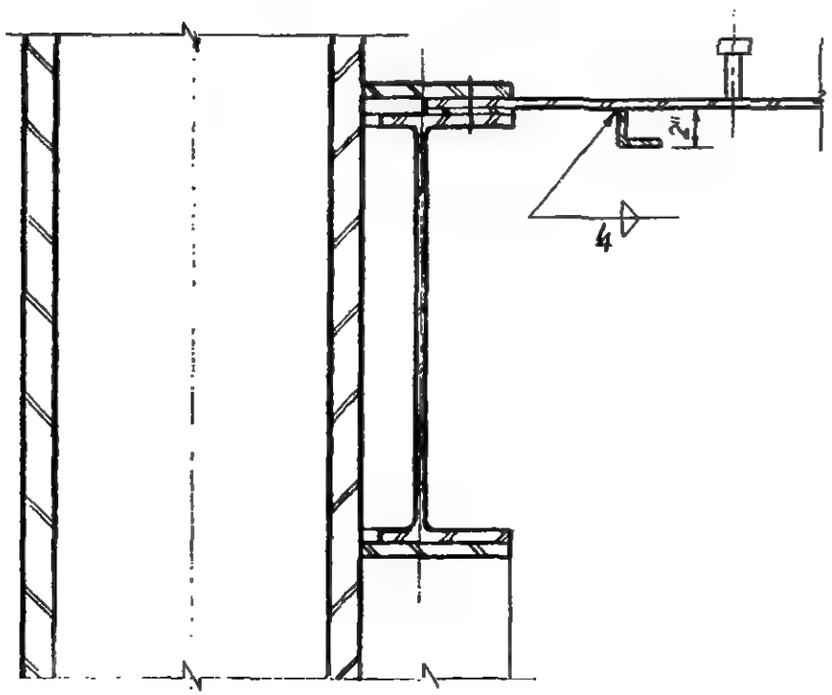

Section a-a

LICENSED PROFESSIONAL ENGINEER
LESLIE E. ROBERTSON
No. 34360
UNIVERSITY OF THE STATE OF NEW YORK

6-AB7-2.9

SKILLING - HELLE - CHRISTIANSEN - ROBERTSON Structural & Civil Engineers

PROJECT THE WORLD TRADE CENTER | TITLE SHEAR PLATE DETAIL AT 7th FLOOR | DATE 7-17-68

REVISIONS

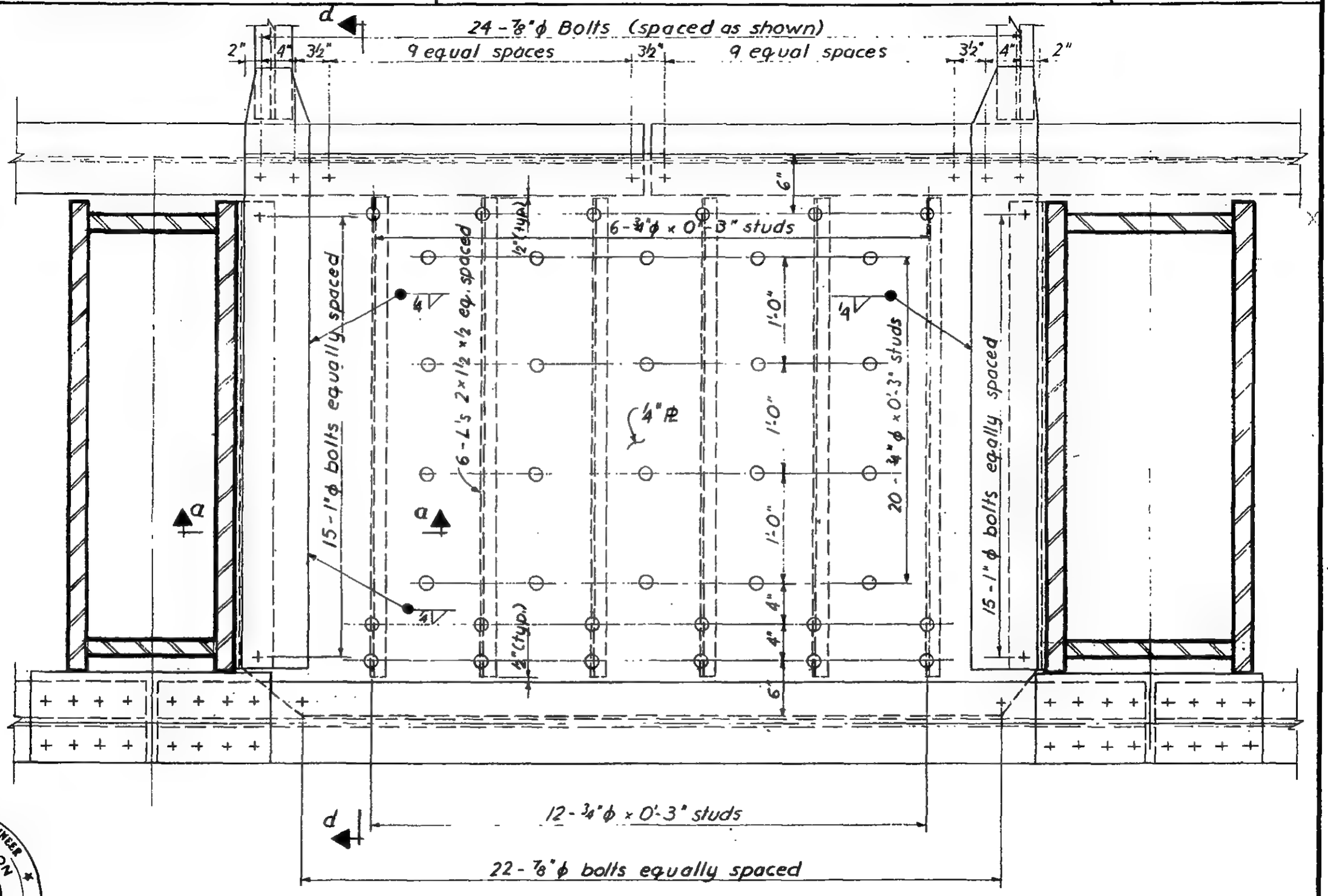

See 6-AB7-2.1 for section a-a
See 6-AB7-2.5 for section d-d

LICENSED PROFESSIONAL ENGINEER
LESLIE E. ROBERTSON
No. 34960
OF THE STATE OF NEW YORK

6-AB7-2.10

SKILLING, HELLE, CHRISTIANSEN, ROBERTSON — Structural & Civil Engineers

PROJECT: THE WORLD TRADE CENTER | TITLE: SHEAR # DETAIL FLOOR 81 | DATE: 9-27-68

REVISIONS

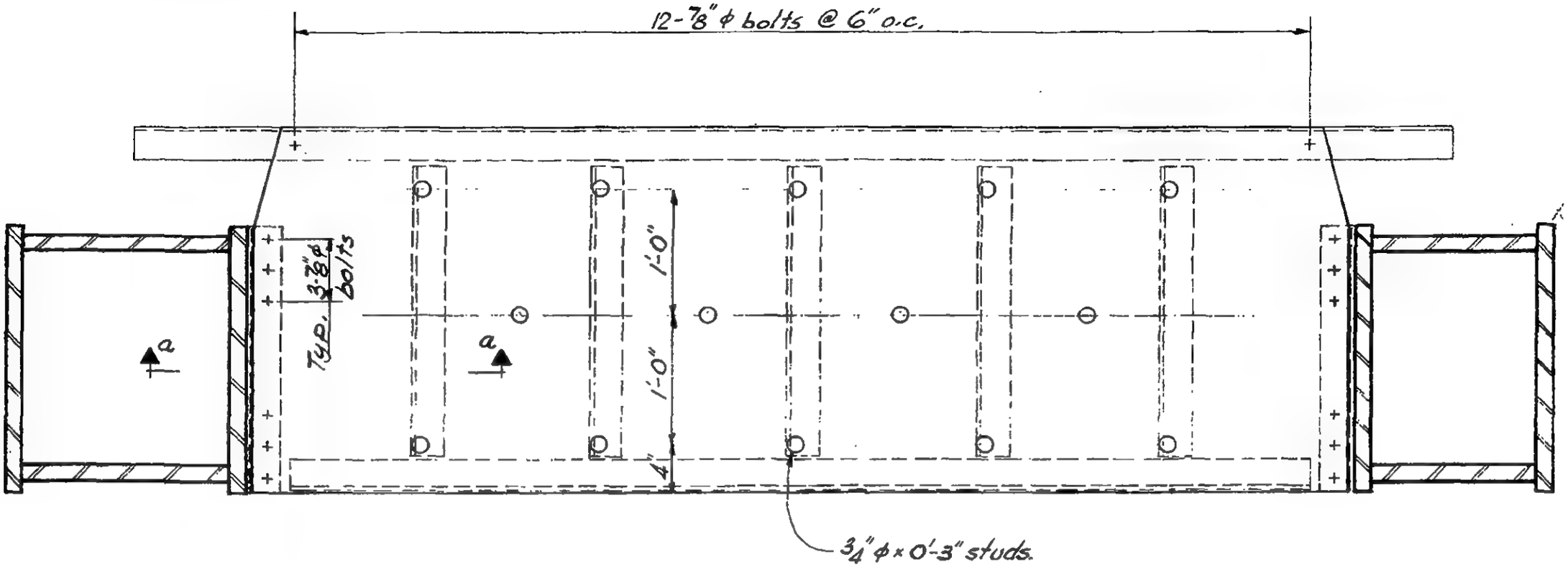

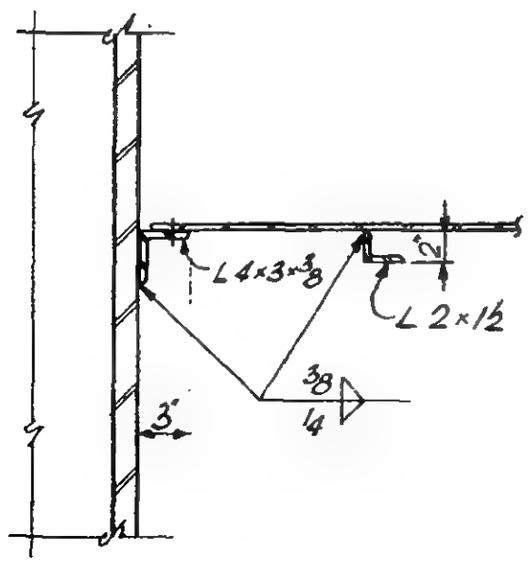

Section a-a

LICENSED PROFESSIONAL ENGINEER — LESLIE E. ROBERTSON — No. 34360 — UNIVERSITY OF THE STATE OF NEW YORK

DESIGNED

DRAWN

REVIEWED

6-AB7-2.11

SKILLING - HELLE - CHRISTIANSEN - ROBERTSON Structural & Civil Engineers

PROJECT THE WORLD TRADE CENTER | TITLE SHEAR PLATE DETAIL | DATE 8-14-67

REVISIONS

2-9-68

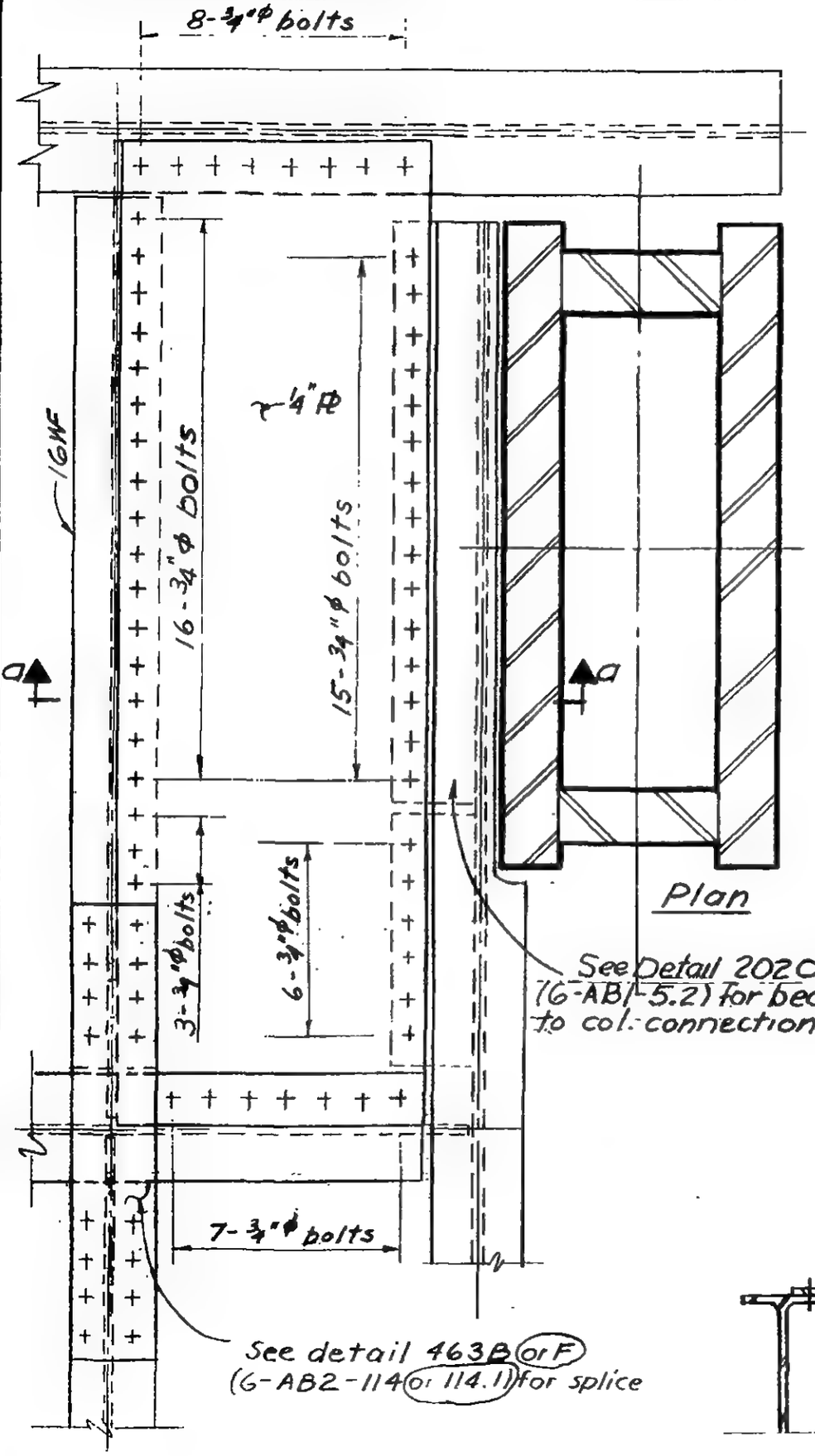

Plan

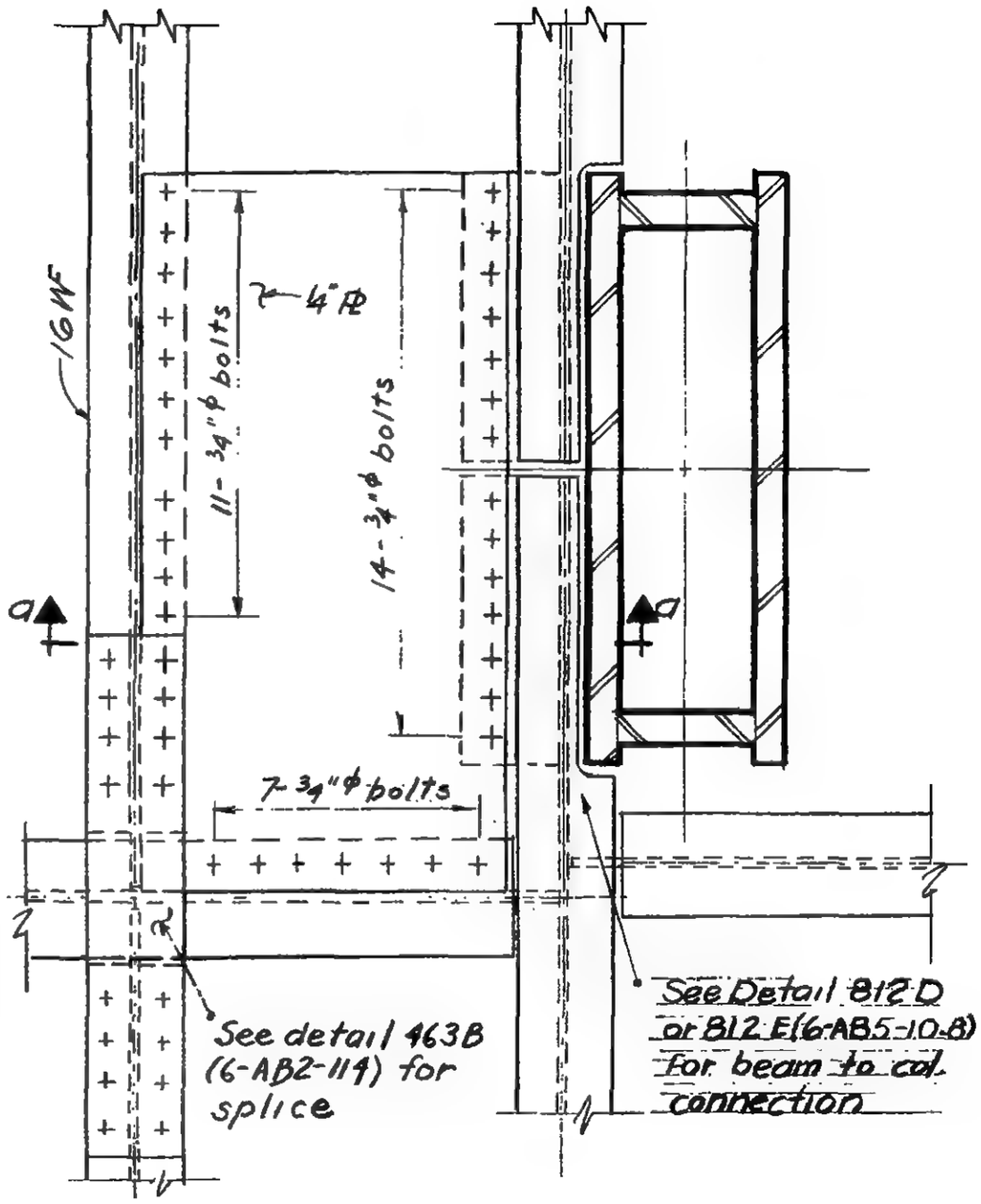

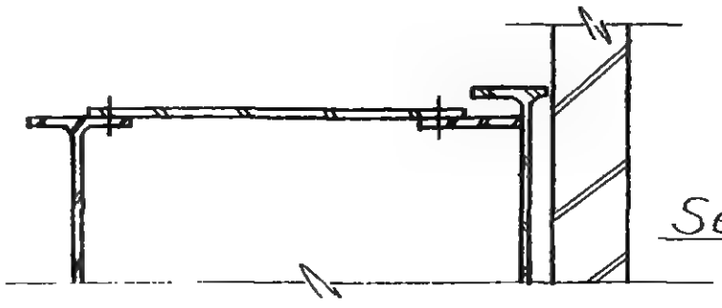

Section a-a

6-AB7-3

LICENSED PROFESSIONAL ENGINEER
LESLIE E. ROBERTSON
No. 34360
UNIVERSITY OF THE STATE OF NEW YORK

SKILLING - HELLE - CHRISTIANSEN - ROBERTSON Structural & Civil Engineers

PROJECT THE WORLD TRADE CENTER | TITLE SHEAR PLATE DETAIL | DATE 8-14-67

REVISIONS

2-9-68

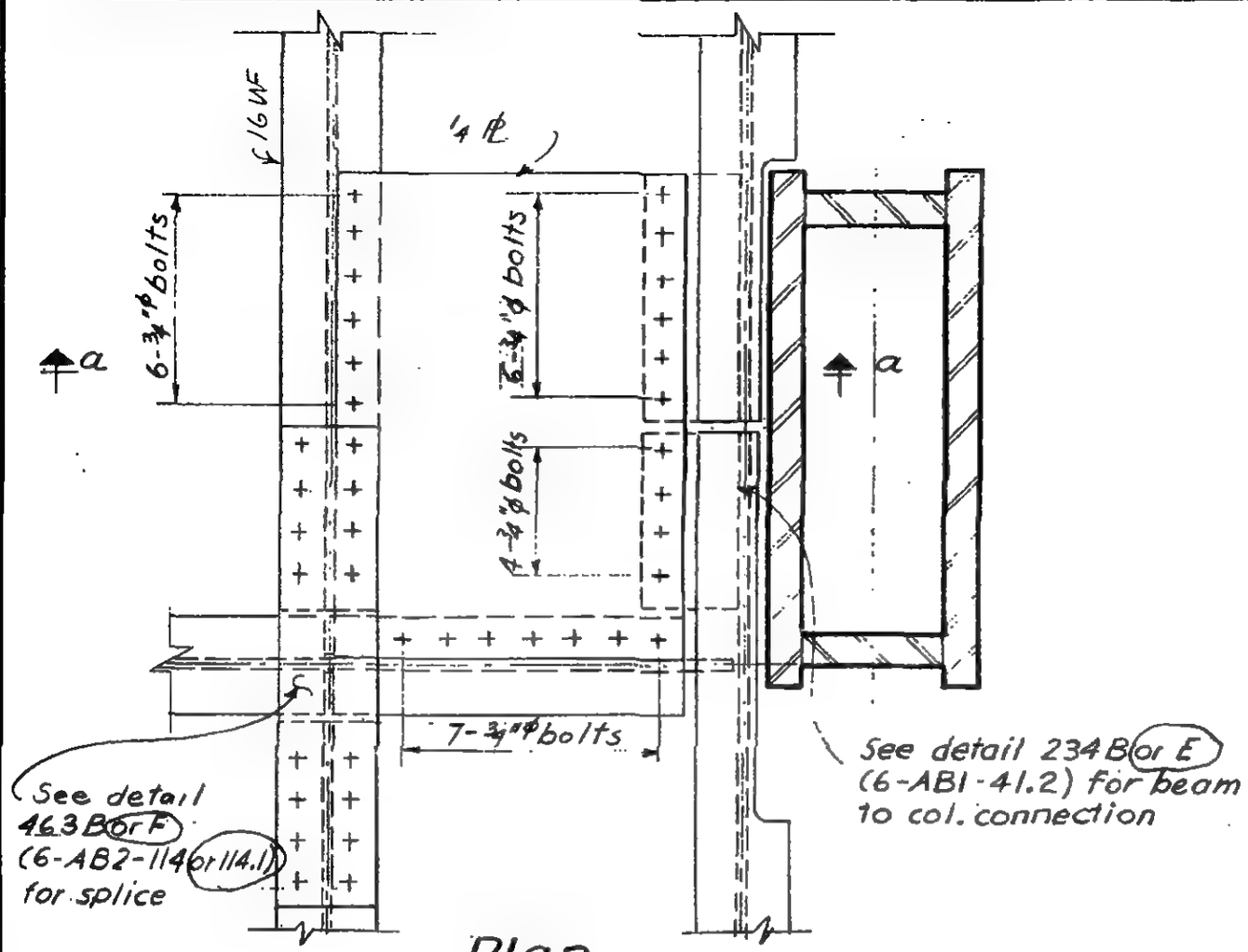

Plan

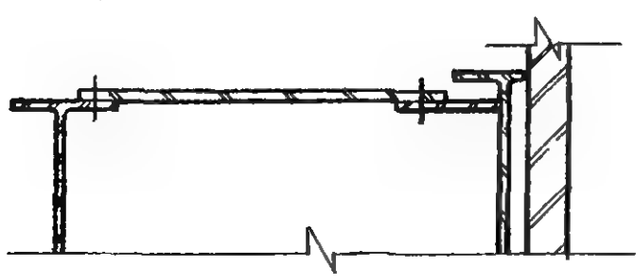

Section a-a

LICENSED PROFESSIONAL ENGINEER
LESLIE E. ROBERTSON
No. 34360
THE STATE OF NEW YORK

6-AB7-4

SKILLING - HELLE - CHRISTIANSEN - ROBERTSON Structural & Civil Engineers

PROJECT THE WORLD TRADE CENTER | TITLE SHEAR PLATE DETAIL | DATE 12-21-67

REVISIONS

5-7-68

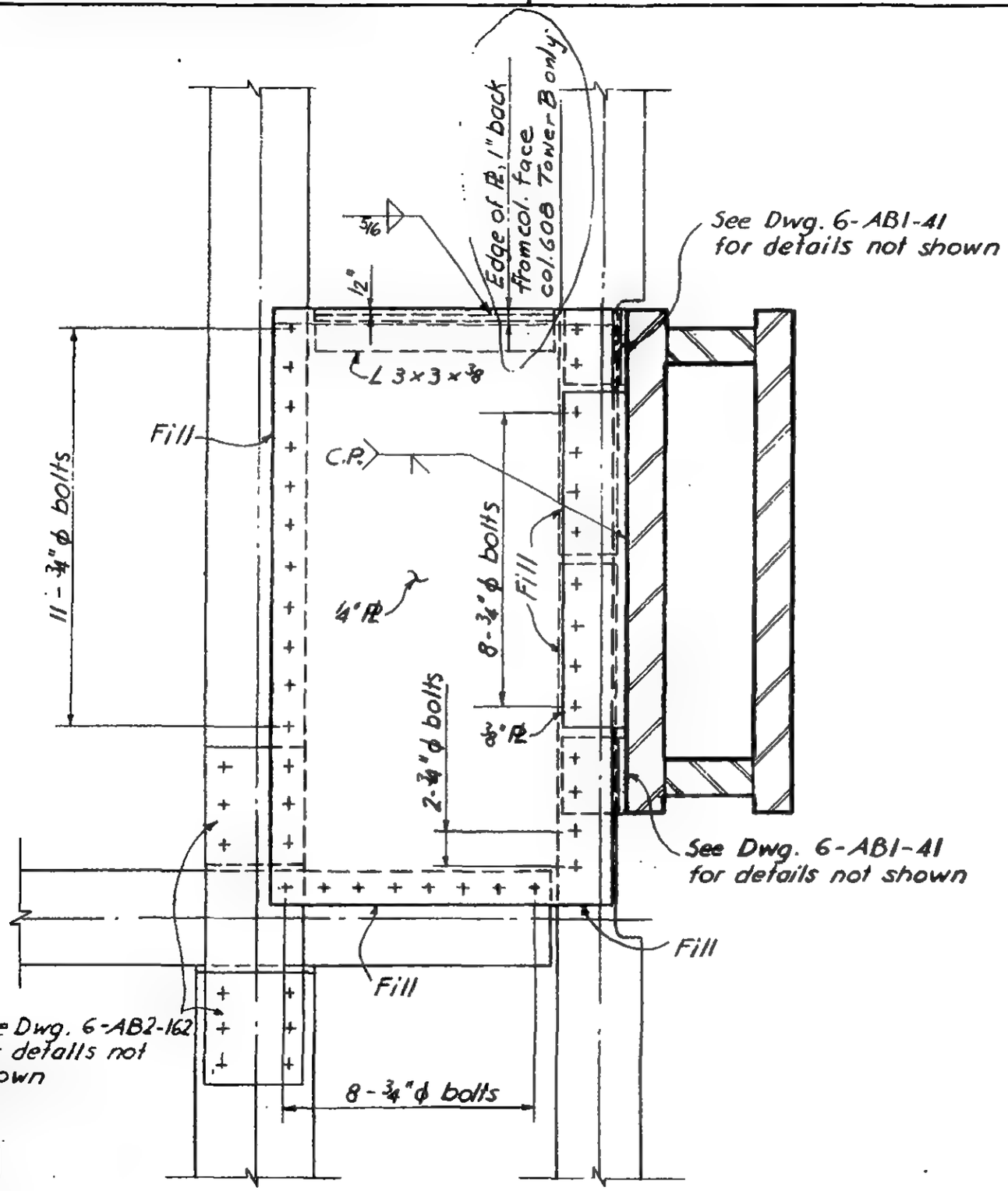

LICENSED PROFESSIONAL ENGINEER
LESLIE E. ROBERTSON
No. 24360
STATE OF NEW YORK

6-AB7-5

SKILLING - HELLE - CHRISTIANSEN - ROBERTSON Structural & Civil Engineers

PROJECT THE WORLD TRADE CENTER | TITLE SHEAR PLATE DETAIL | DATE 2-9-68

REVISIONS

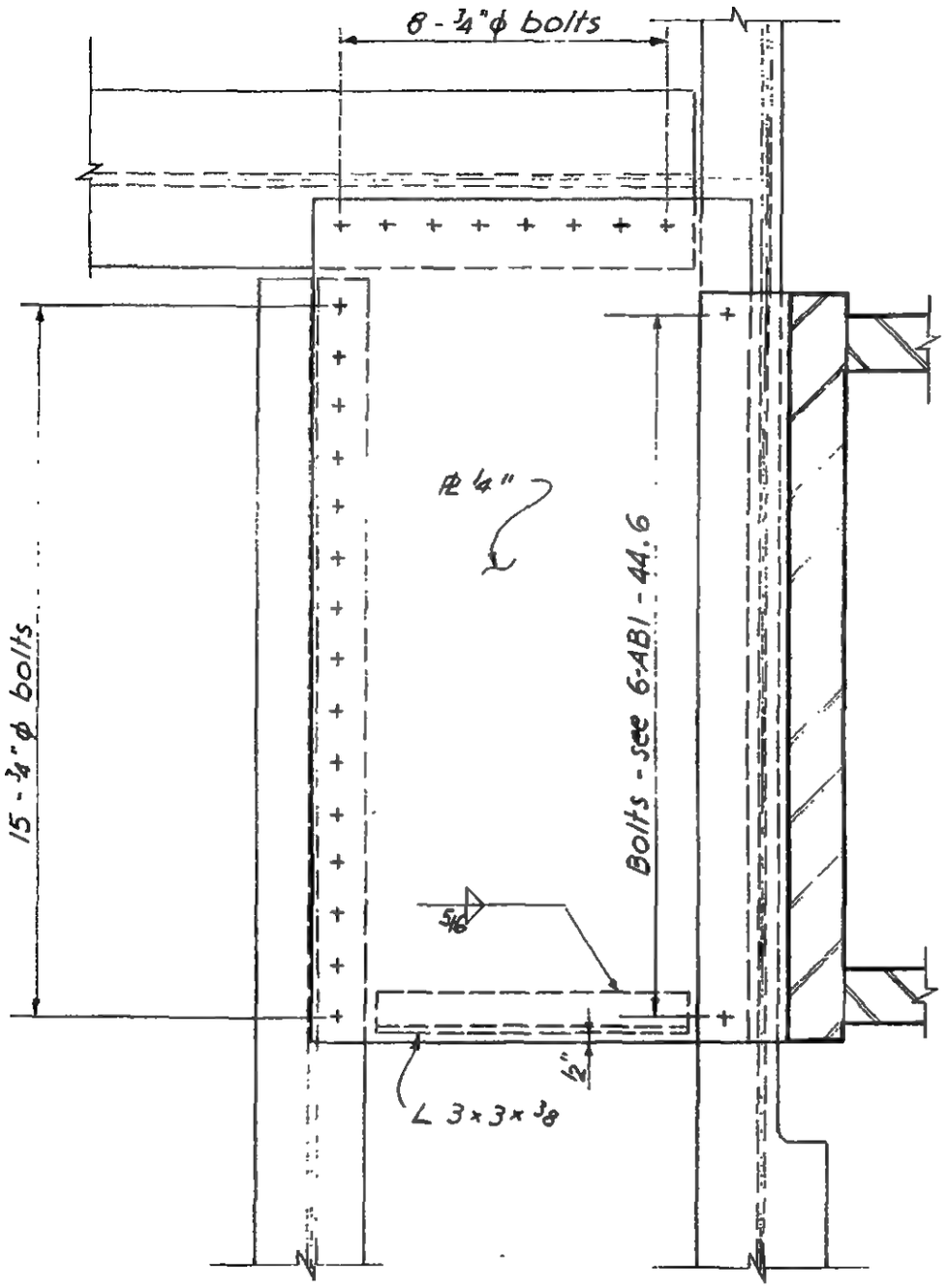

LICENSED PROFESSIONAL ENGINEER
LESLIE E. ROBERTSON
No. 34360
UNIVERSITY OF THE STATE OF NEW YORK

6 - AB7 - 5.1

SKILLING - HELLE - CHRISTIANSEN - ROBERTSON Structural & Civil Engineers

PROJECT THE WORLD TRADE CENTER | TITLE SHEAR PLATE DETAIL | DATE 2-9-68

REVISIONS

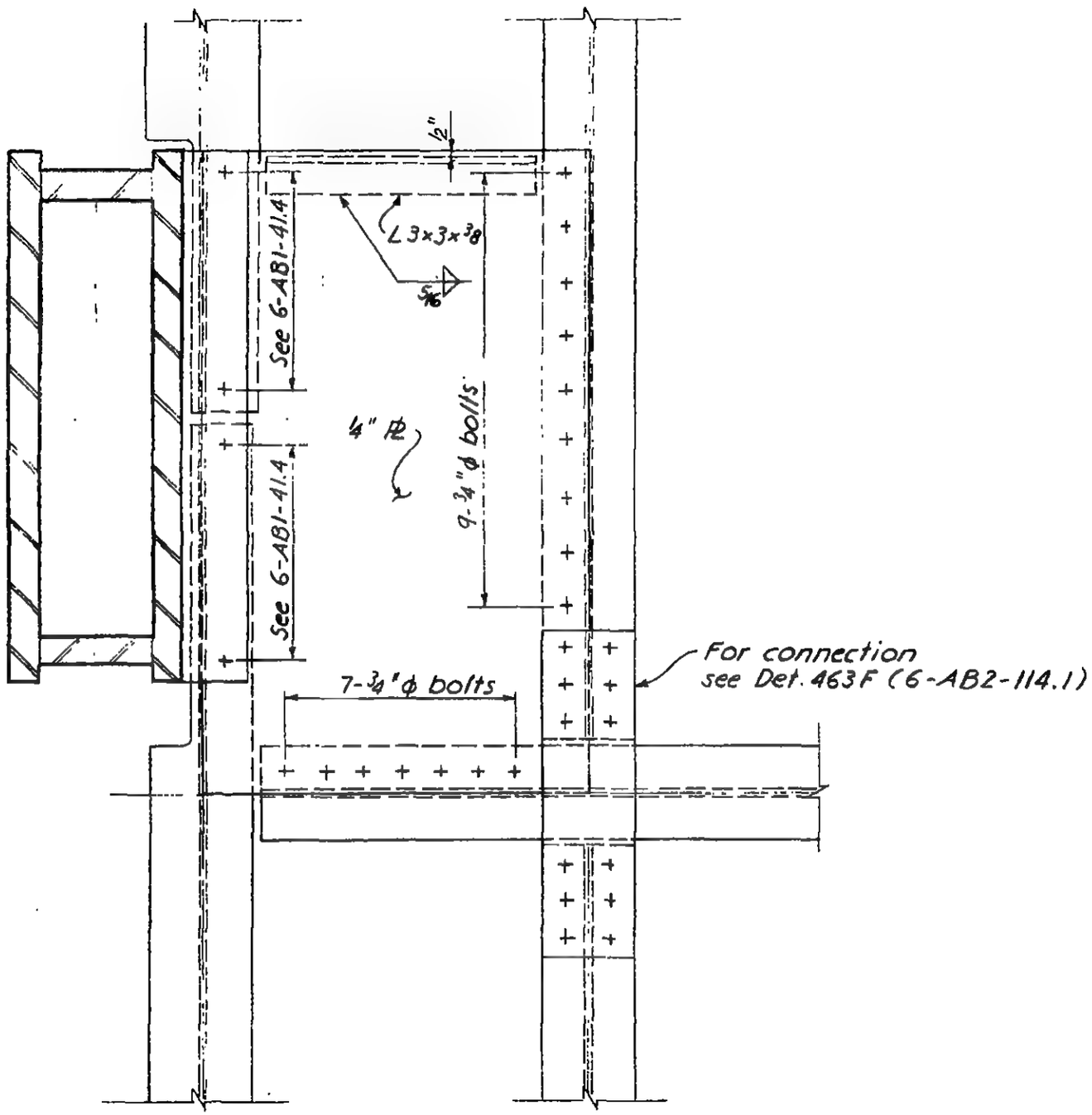

LICENSED PROFESSIONAL ENGINEER
LESLIE E. ROBERTSON
No. 34360
THE STATE OF NEW YORK

6-AB7-5.2

SKILLING - HELLE - CHRISTIANSEN - ROBERTSON Structural & Civil Engineers

PROJECT THE WORLD TRADE CENTER | TITLE SHEAR PLATE DETAIL | DATE 12-21-67

REVISIONS

2-9-68

5-7-68

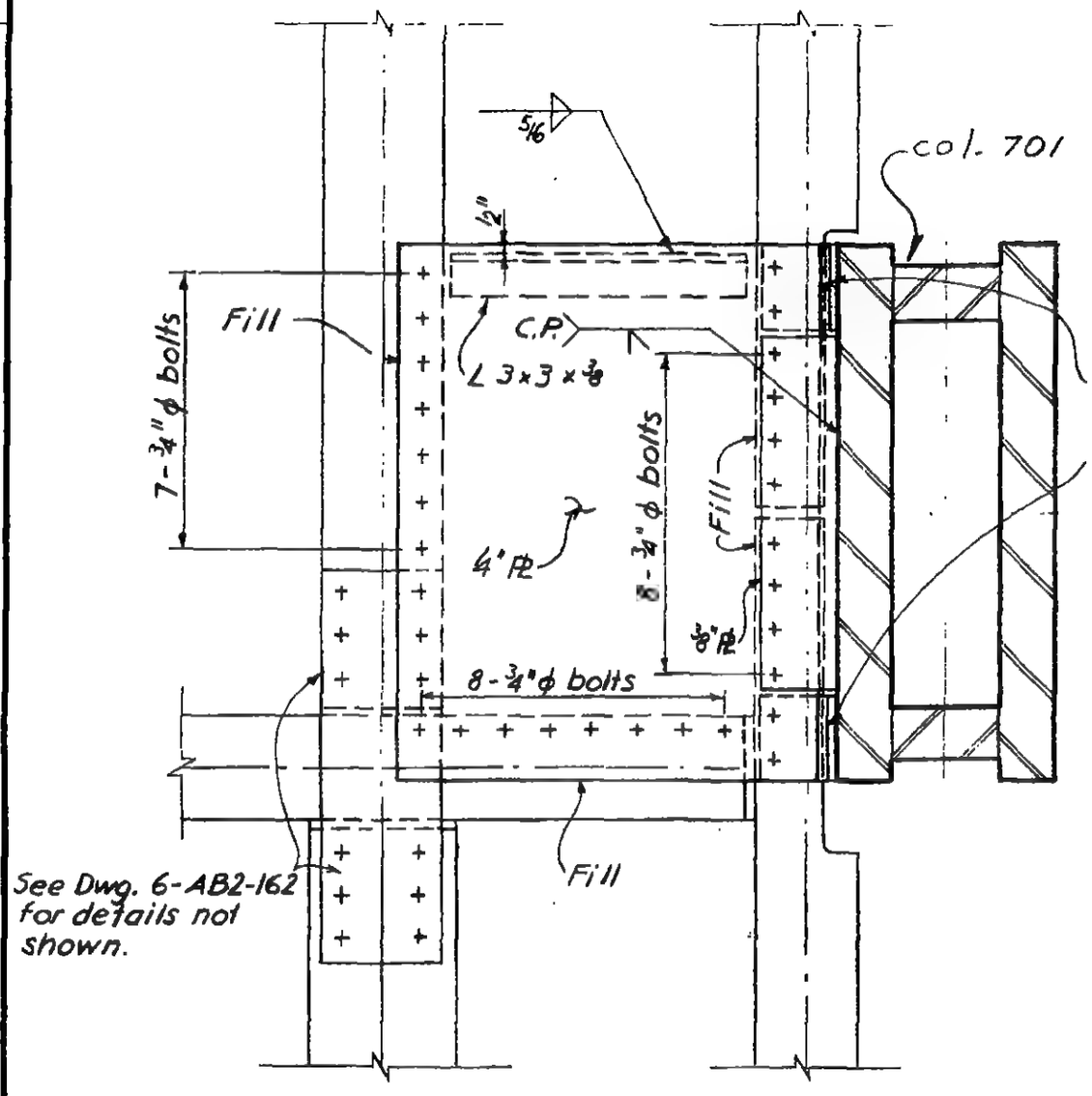

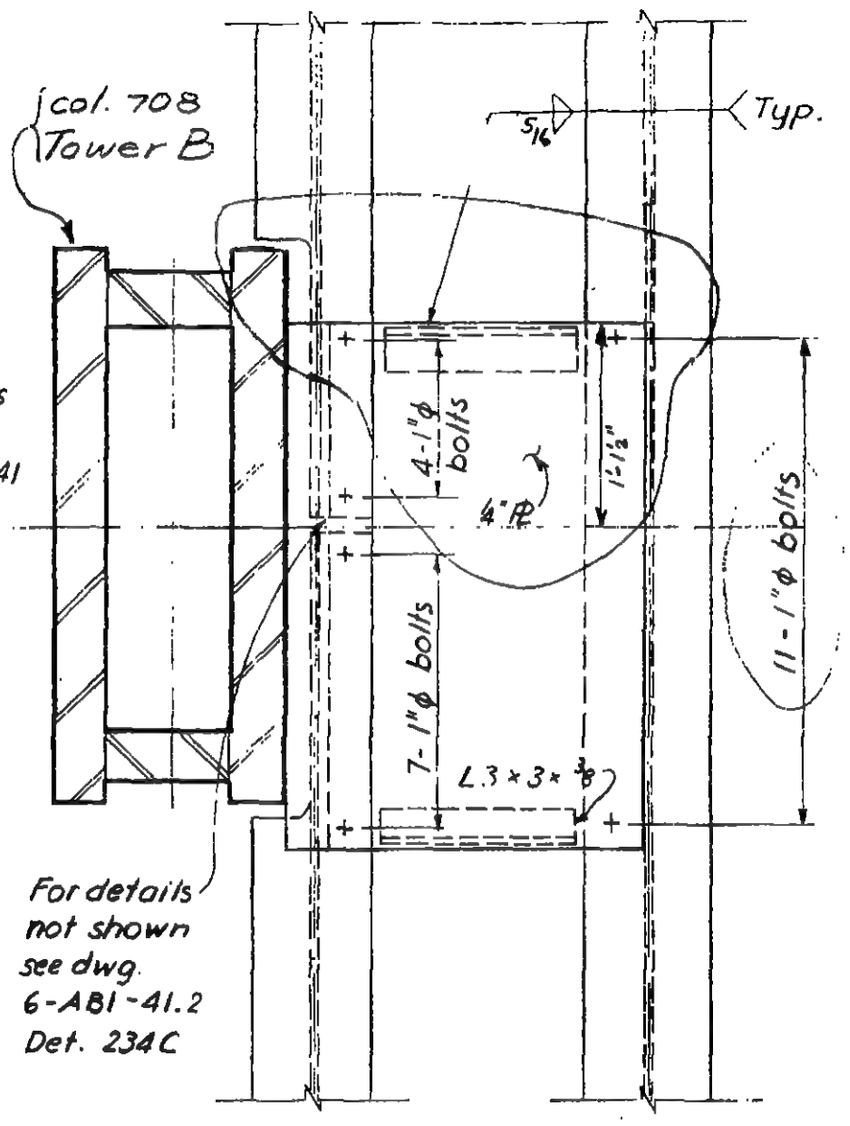

LICENSED PROFESSIONAL ENGINEER LESLIE E. ROBERTSON No. 34360 STATE OF THE STATE OF NEW YORK

6-AB7-6

SKILLING - HELLE - CHRISTIANSEN - ROBERTSON Structural & Civil Engineers

PROJECT THE WORLD TRADE CENTER | TITLE SHEAR PLATE DETAIL | DATE 12-21-67

REVISIONS

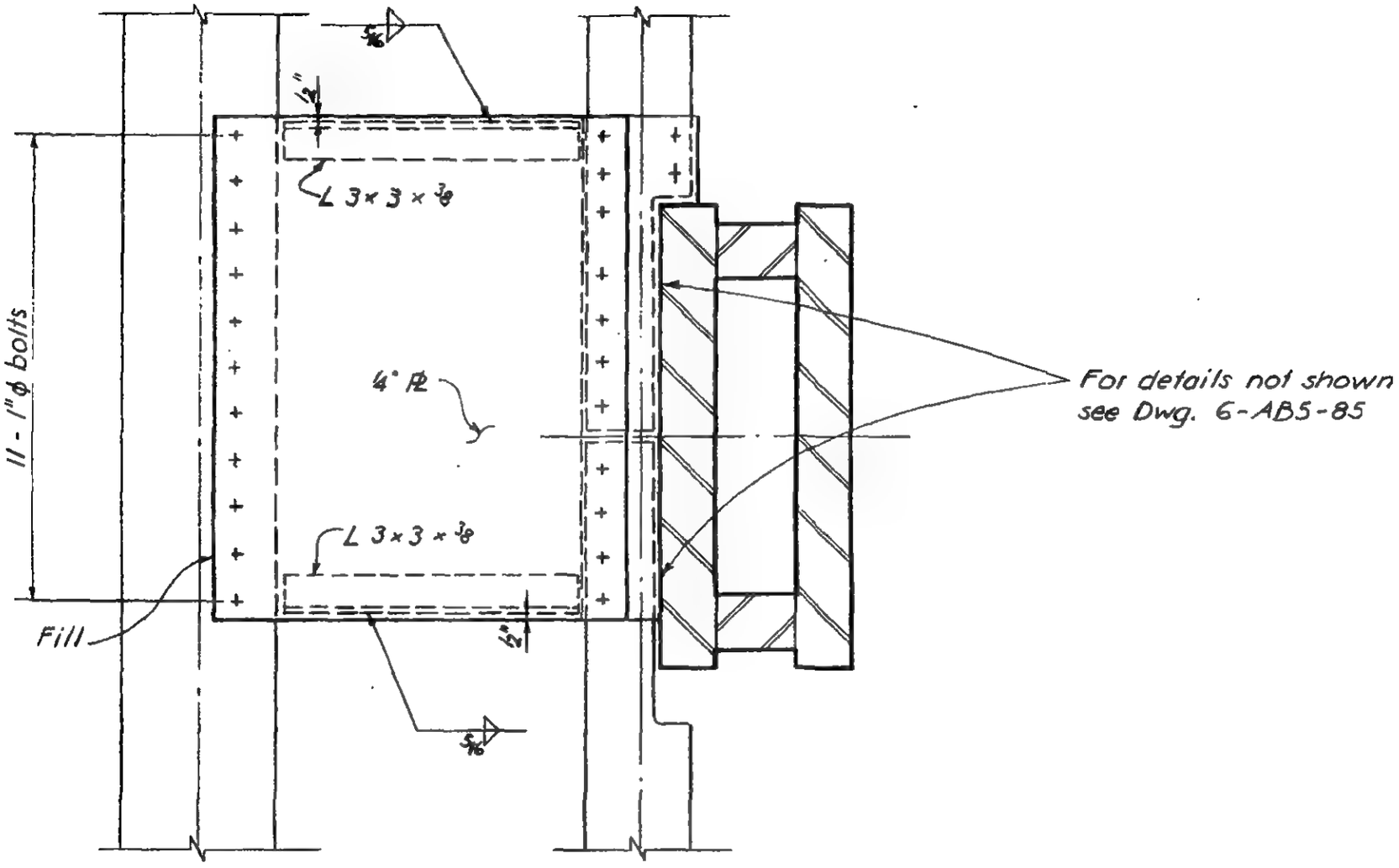

LICENSED PROFESSIONAL ENGINEER
LESLIE E. ROBERTSON
No. 34360
UNIVERSITY OF THE STATE OF NEW YORK

6-AB7-7

SKILLING - HELLE - CHRISTIANSEN - ROBERTSON Structural & Civil Engineers

PROJECT THE WORLD TRADE CENTER | TITLE SHEAR PLATE DETAIL | DATE 12-21-67

REVISIONS

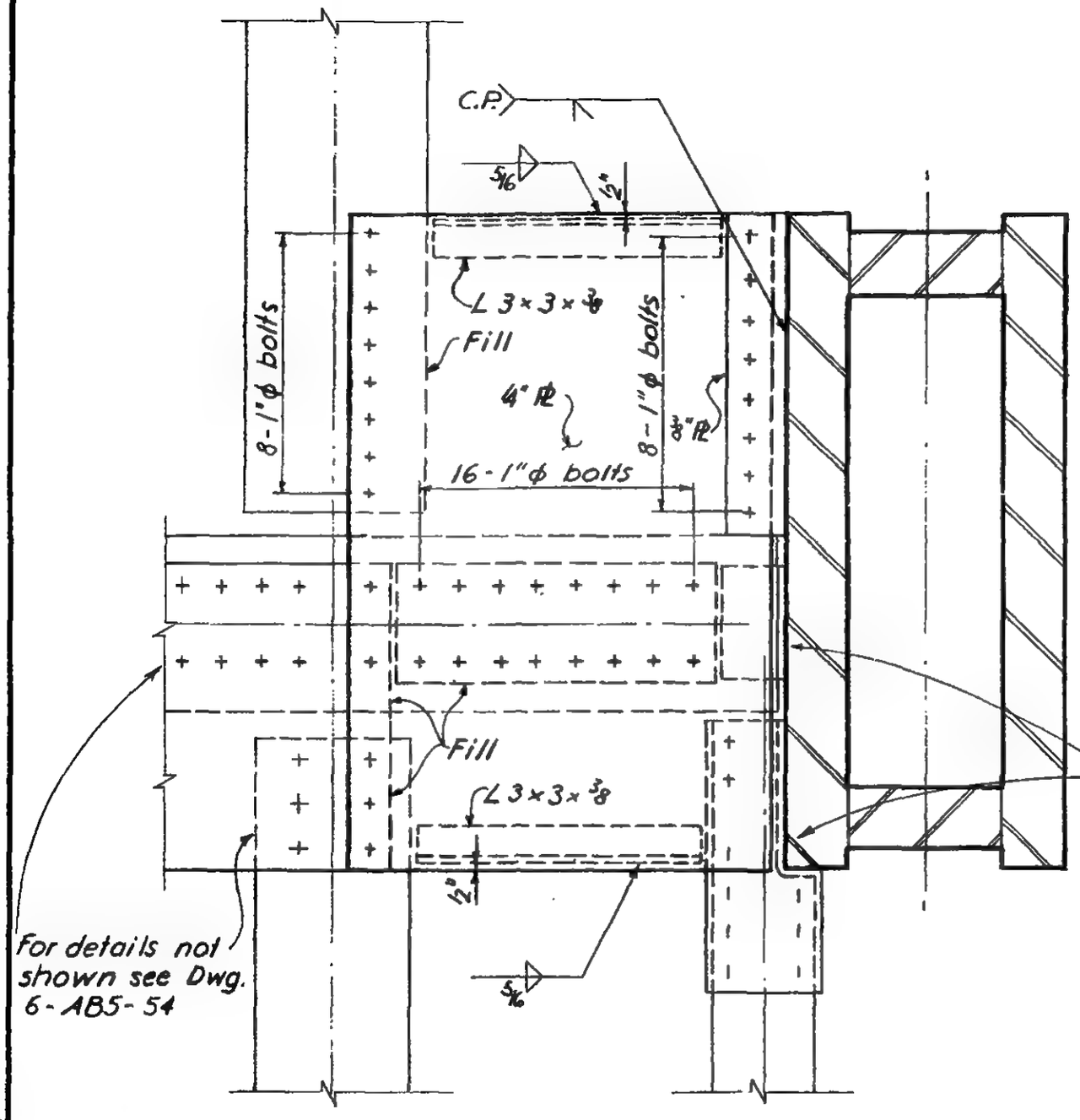

LICENSED PROFESSIONAL ENGINEER
LESLIE E. ROBERTSON
No. 34360
CITY OF THE STATE OF NEW YORK

6-AB7-8

SKILLING - HELLE - CHRISTIANSEN - ROBERTSON Structural & Civil Engineers

PROJECT THE WORLD TRADE CENTER | TITLE SHEAR PLATE DETAIL | DATE 12-21-67

REVISIONS

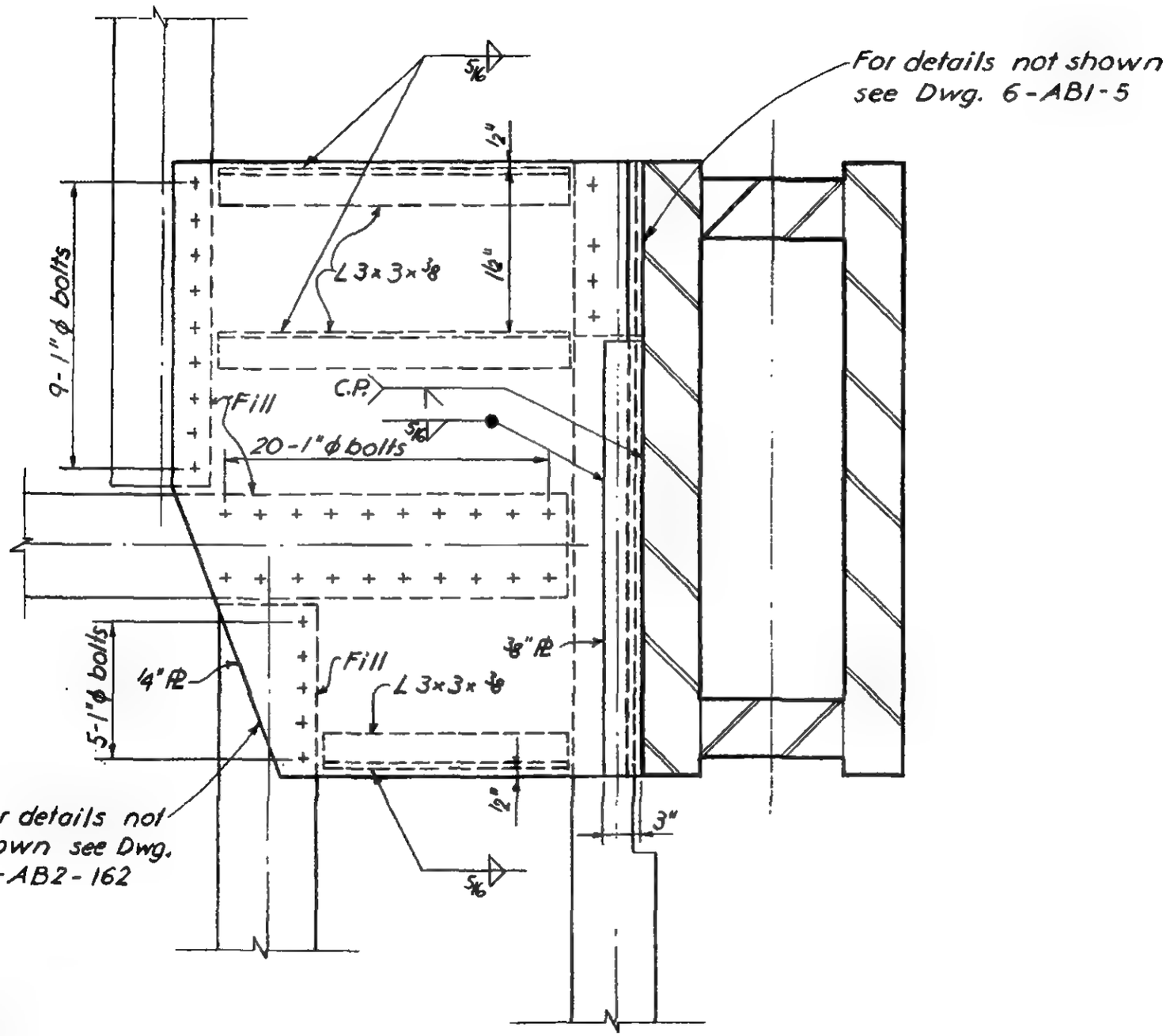

REGISTERED PROFESSIONAL ENGINEER LESLIE E. ROBERTSON No. 34360 STATE OF NEW YORK

6-AB7-9

SKILLING - HELLE - CHRISTIANSEN - ROBERTSON Structural & Civil Engineers

PROJECT THE WORLD TRADE CENTER | TITLE TRUSS SEAT DETAILS ~ INDEX | DATE 9-6-67

REVISIONS
9-25-67
11-22-67
9-18-68
1-3-69
2-3-69
3-3-69
4-1-69
Printed 5-1-69

6-AB8-2 & 2.1	CORE PERIMETER ELEVATION ~	FLOORS 10-40
6-AB8-3	" " "	" 10-17, 19-40
6-AB8-4	" " "	FLOOR 18
6-AB8-5 & 5.1	" " "	FLOORS 10-40
6-AB8-6	" " "	" 10-33 & 35-40
6-AB8-7	CORE PERIMETER ELEVATION ~	FLOOR 34
6-AB8-8	TRUSS SEAT DETAIL ~ 10	
6-AB8-9	" " " 11	
6-AB8-10	" " " 12	
6-AB8-11	" " " 13	
6-AB8-12	" " " 14	
6-AB8-13	" " " 15	
6-AB8-14	TRUSS SEAT DETAIL ~ 16	
6-AB8-15	CORE PERIMETER ELEVATION ~	FLOOR 44 (TOWER A)
6-AB8-15.1	" " "	" " (TOWER B)
6-AB8-16	" " "	FLOORS 44 (TOWER A ONLY) & 78 (TOWER A & B)
6-AB8-16.1	" " "	FLOOR 44 (TOWER B)
6-AB8-17	" " "	" 45
6-AB8-18	" " "	FLOORS 46-74, 79-82
6-AB8-19	" " "	" 46, 48 & 49
6-AB8-20	" " "	FLOOR 47
6-AB8-21	" " "	FLOORS 50-55, 57-74
6-AB8-22	" " "	FLOOR 56
6-AB8-23	" " "	FLOORS 45-48
6-AB8-24	" " "	" 49-74, 79-106
6-AB8-25	" " "	FLOORS 45, 46, 48 & 49
6-AB8-26	" " "	FLOOR 47
6-AB8-27	" " "	FLOORS 50-68, 70-74
6-AB8-28	CORE PERIMETER ELEVATION ~	FLOOR 69
6-AB8-29	TRUSS SEAT DETAIL ~ 17, 18	
6-AB8-30	" " " 19	
6-AB8-31	" " " 20, 21	
6-AB8-32	" " " 22	
6-AB8-33	TRUSS SEAT DETAIL ~ 23	
6-AB8-34	CORE PERIMETER ELEVATION ~	FLOOR 78
6-AB8-35	" " "	FLOORS 83-106
6-AB8-36	" " "	" 79, 80, 82 & 83
6-AB8-37	" " "	FLOOR 81
6-AB8-38	" " "	FLOORS 84-94, 96-106
6-AB8-39	" " "	FLOOR 95
6-AB8-40	" " "	FLOORS 80, 82 & 83
6-AB8-41	" " "	FLOOR 81
6-AB8-42	" " "	FLOORS 84-87, 89-106
6-AB8-43	" " "	FLOOR 88
6-AB8-44	CORE PERIMETER ELEVATION ~	FLOORS 44, 45, 78 & 79
6-AB8-45	TRUSS SEAT DETAIL ~ 24	
6-AB8-46	" " " 25	
6-AB8-47	TRUSS SEAT DETAIL ~ 26, 27 & 28	
6-AB8-48	" 29	
6-AB8-49	" " " 30, 31 & 32	

LICENSED PROFESSIONAL ENGINEER LESLIE E. ROBERTSON No. 34360 STATE OF NEW YORK

Note:
Sheet 1 of 2

SKILLING - HELLE - CHRISTIANSEN - ROBERTSON Structural & Civil Engineers

PROJECT THE WORLD TRADE CENTER | TITLE TRUSS SEAT DETAILS ~ INDEX | DATE 11-22-67

REVISIONS
9-18-68
1-3-69
2-3-69
3-3-69
4-1-69
Printed 5-1-69

6-AB8-50 CORE PERIMETER STUD SCHEDULE
6-AB8-50.1 CORE PERIMETER STUD DETAILS
6-AB8-51 CORE PERIMETER DETAIL 51
6-AB8-52 TRUSS SEAT DETAIL 33 & 34

LICENSED PROFESSIONAL ENGINEER
LESLIE E. ROBERTSON
No. 34360
UNIVERSITY OF THE STATE OF NEW YORK

Note:
Sheet 2 of 2

6-AB8-1.1

SKILLING - HELLE - CHRISTIANSEN - ROBERTSON Structural & Civil Engineers

PROJECT THE WORLD TRADE CENTER | TITLE CORE PERIMETER ELEVATION – FLOORS 10-40 | DATE 9-6-67

REVISIONS
11-22-67
9-18-68

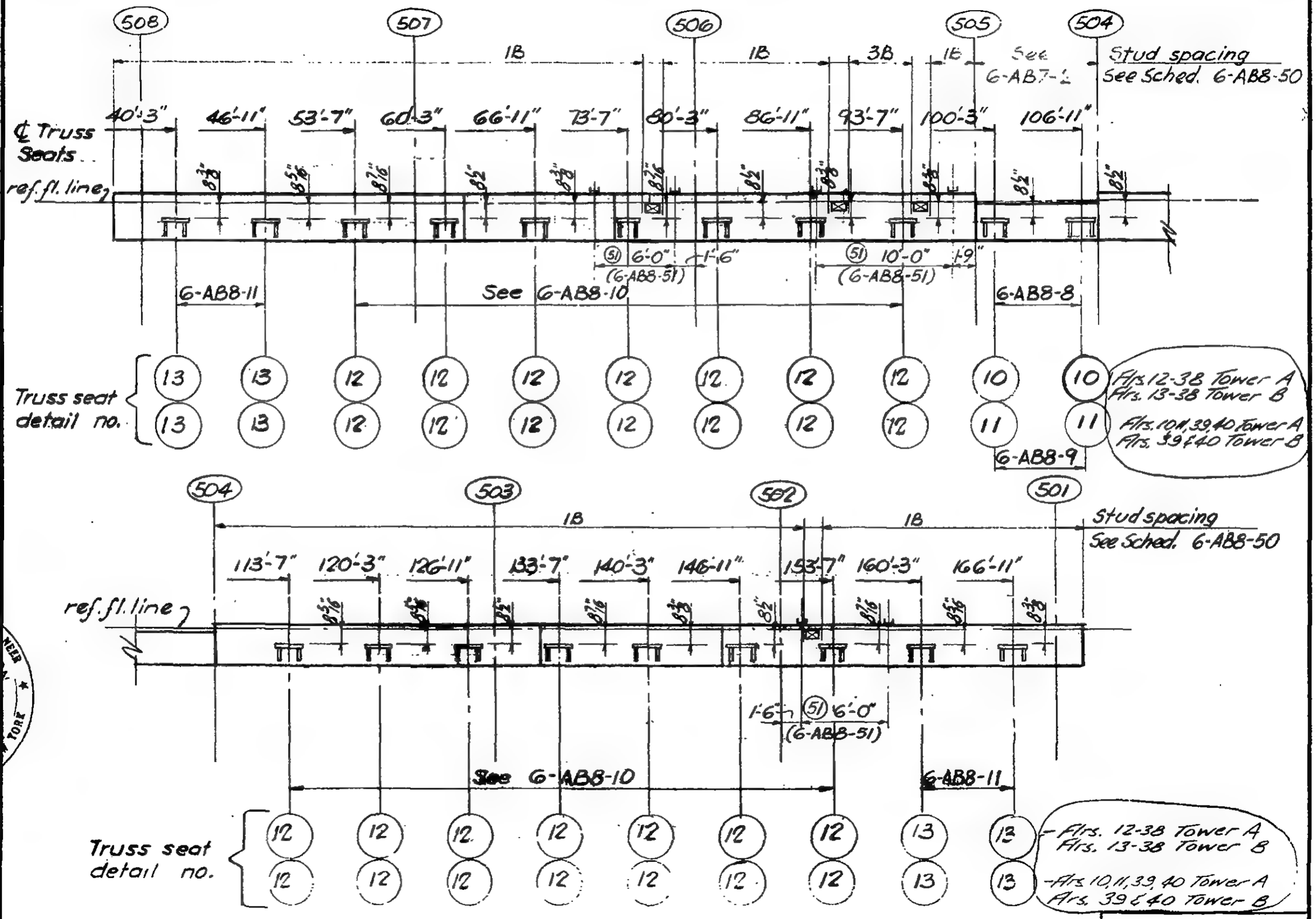

LICENSED PROFESSIONAL ENGINEER
LESLIE E. ROBERTSON
No. 34360
UNIVERSITY OF THE STATE OF NEW YORK

R

6-AB8-2

SKILLING, HELLE, CHRISTIANSEN, ROBERTSON — Structural & Civil Engineers

PROJECT THE WORLD TRADE CENTER | TITLE CORE PERIMETER ELEV. FLOORS 10-40 | DATE 9-18-68

REVISIONS

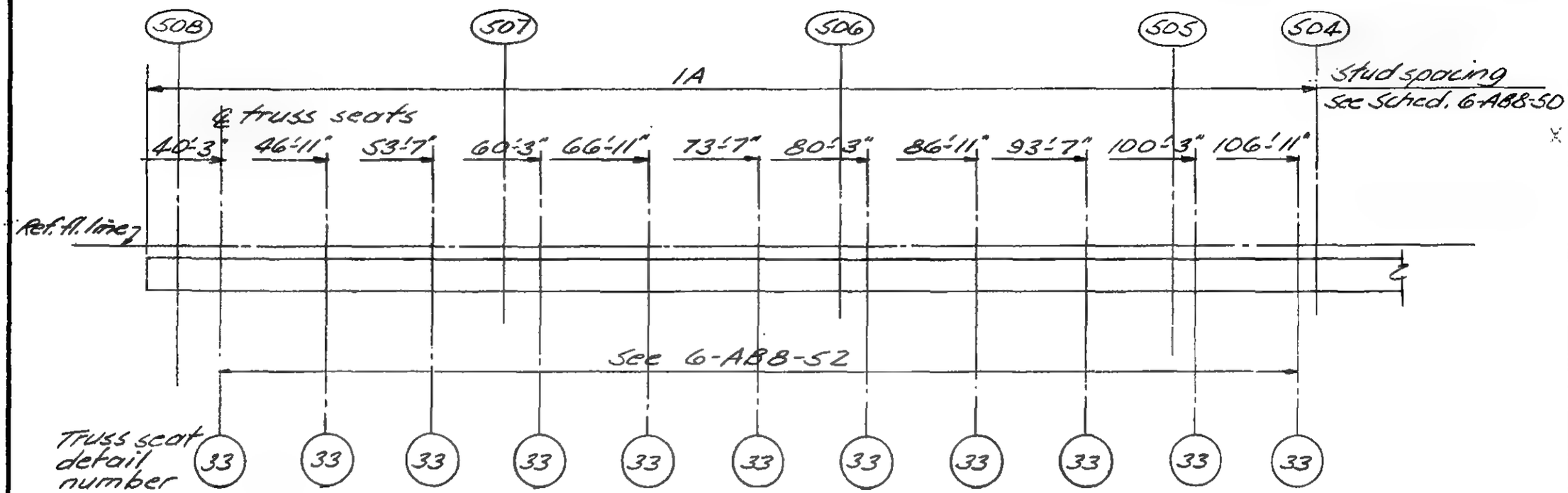

Floors 10, 11 & 12 Tower B

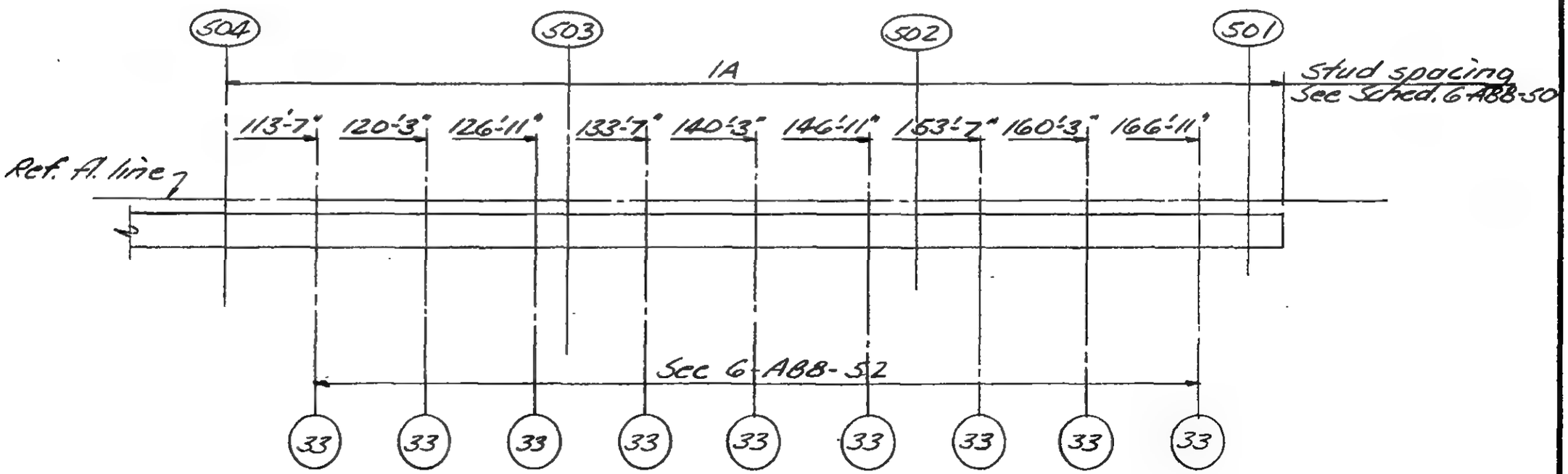

Floors 10, 11 & 12 Tower B

LICENSED PROFESSIONAL ENGINEER
LESLIE E. ROBERTSON
No. 34360
UNIVERSITY OF THE STATE OF NEW YORK

DESIGNED

DRAWN

REVIEWED

6-AB8-2.1

SKILLING - HELLE - CHRISTIANSEN - ROBERTSON Structural & Civil Engineers

PROJECT: THE WORLD TRADE CENTER | TITLE: CORE PERIMETER ELEVATION - FLOORS 10-17, 19-40 | DATE: 9-6-67

REVISIONS
11-22-67
9-18-68

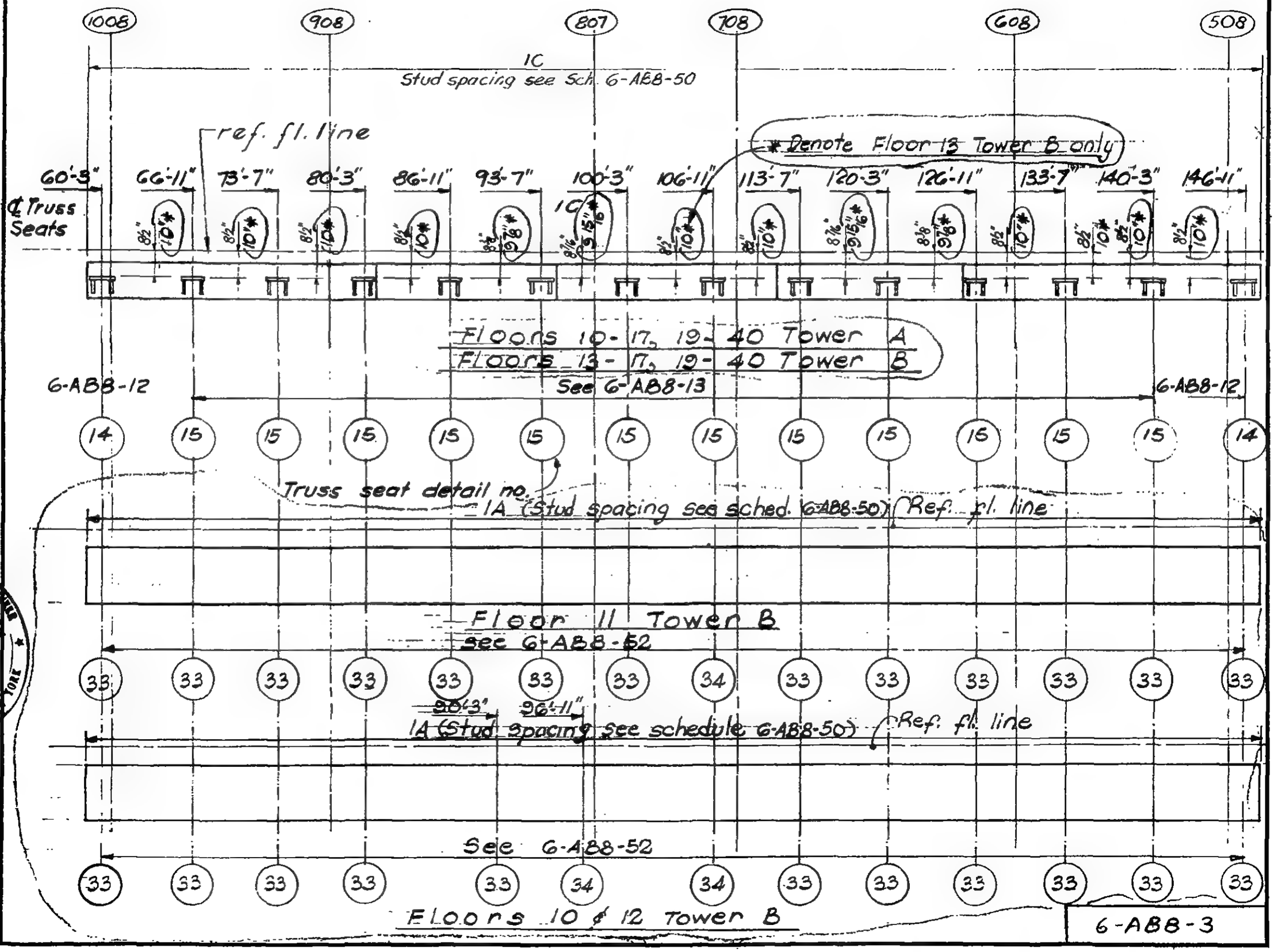

6-AB8-3

R

SKILLING - HELLE - CHRISTIANSEN - ROBERTSON Structural & Civil Engineers

PROJECT: THE WORLD TRADE CENTER | TITLE: CORE PERIMETER ELEVATION - FLOOR 18 | DATE: 9-6-67

REVISIONS

11-22-67

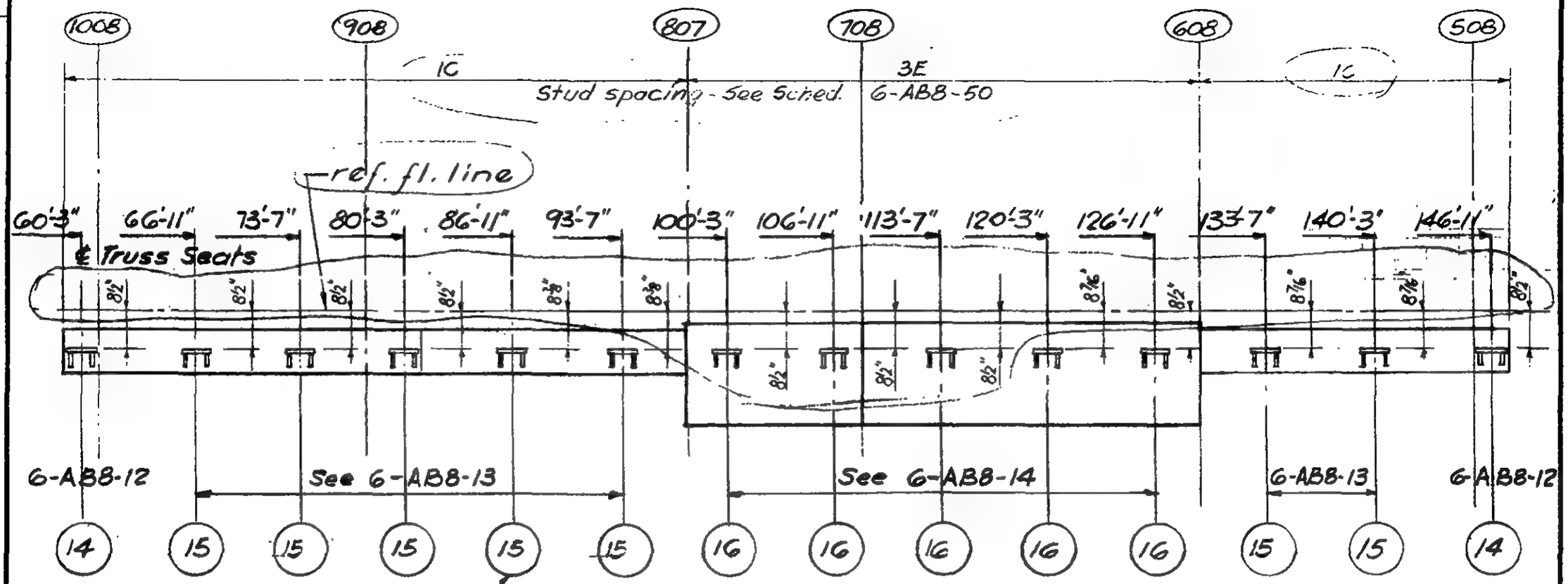

R

6-AB8-4

SKILLING - HELLE - CHRISTIANSEN - ROBERTSON Structural & Civil Engineers

PROJECT THE WORLD TRADE CENTER | TITLE CORE PERIMETER ELEVATION-FLOORS 10-40 | DATE 9-6-67

REVISIONS
11-22-67
9-18-68

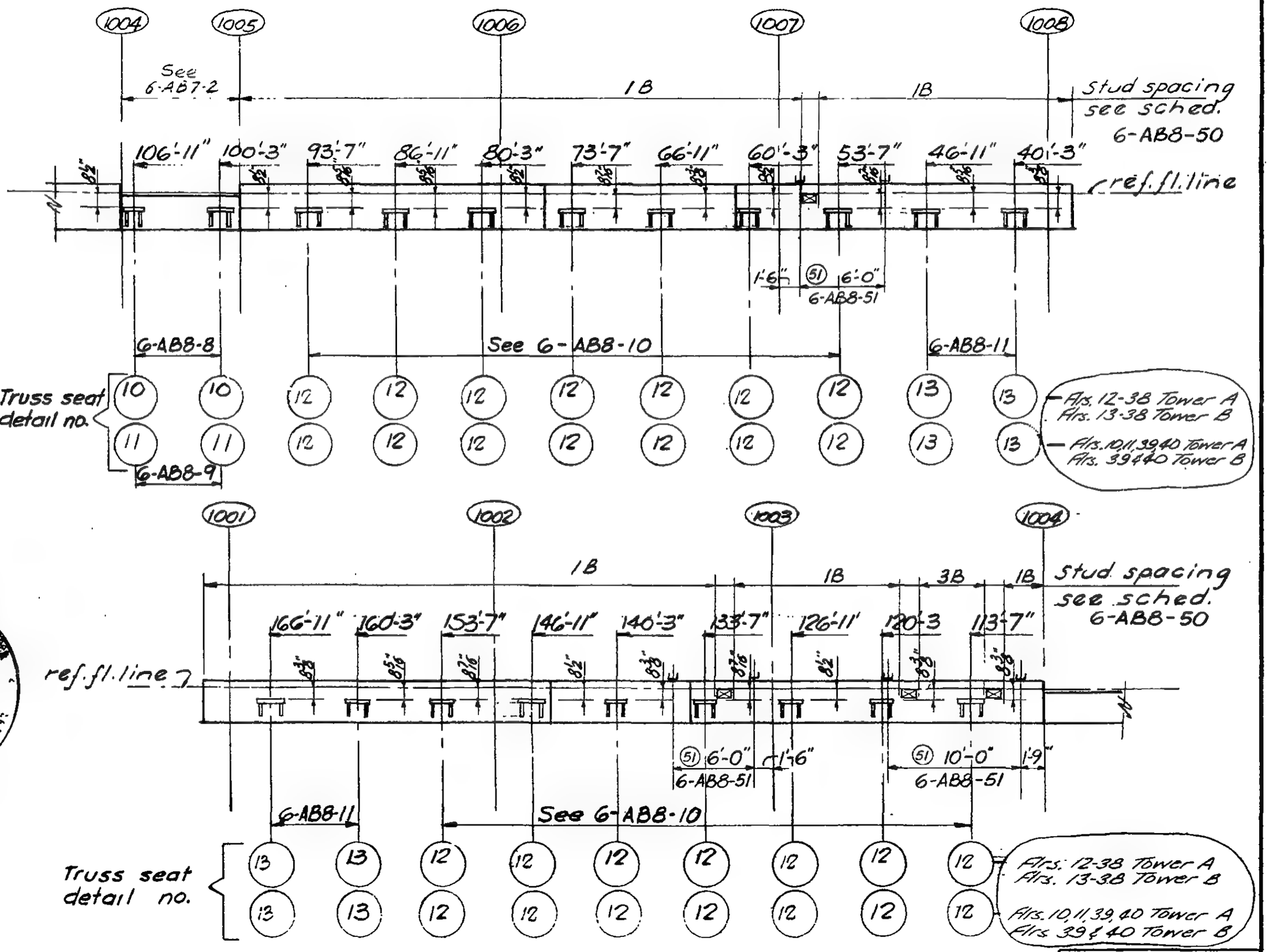

LICENSED PROFESSIONAL ENGINEER LESLIE E. ROBERTSON No. 34360 UNIVERSITY OF THE STATE OF N

6-AB8-5

SKILLING, HELLE, CHRISTIANSEN, ROBERTSON — Structural & Civil Engineers

PROJECT: THE WORLD TRADE CENTER | TITLE: CORE PERIMETER ELEVATION - FLOORS 10-40 | DATE: 9-18-68

REVISIONS

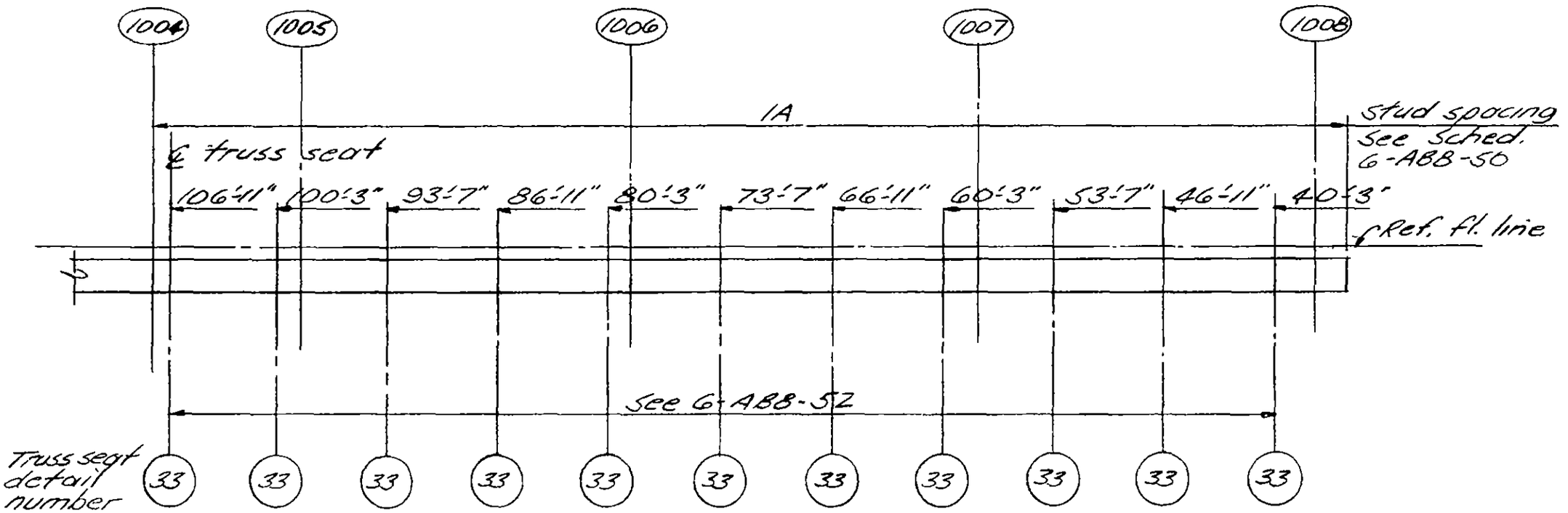

Floors 10, 11 & 12 Tower B

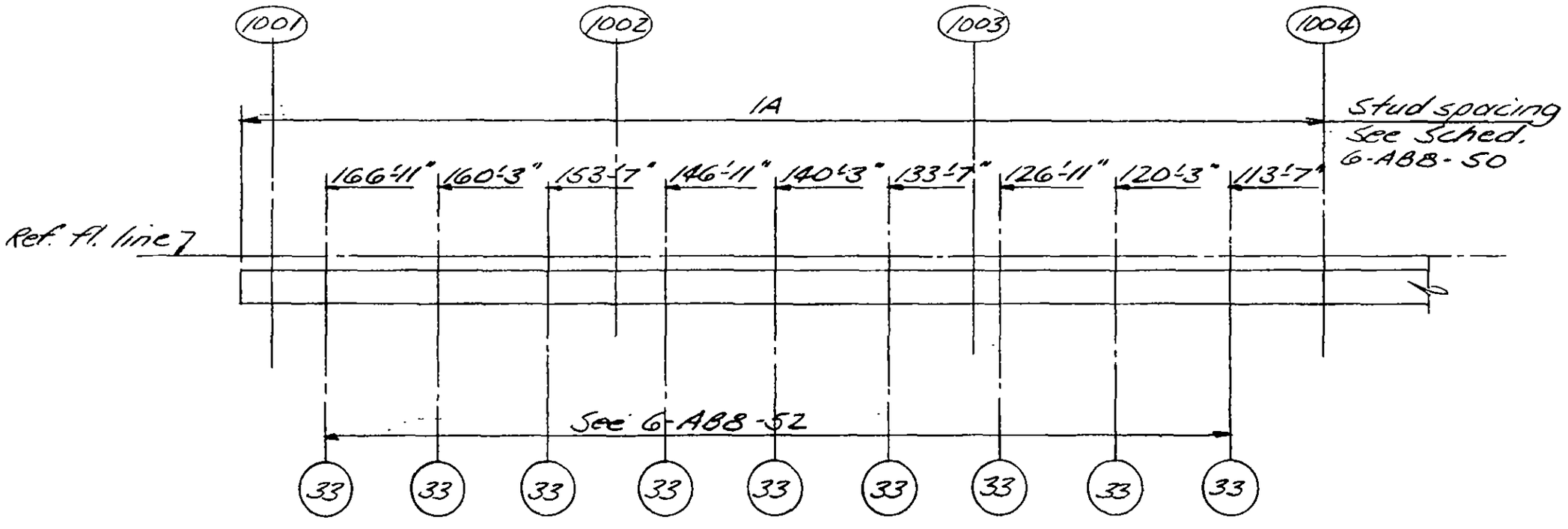

Floors 10, 11 & 12 Tower B

LICENSED PROFESSIONAL ENGINEER
LESLIE E. ROBERTSON
No. 34360
UNIVERSITY OF THE STATE OF NEW YORK

DESIGNED

DRAWN

REVIEWED

6-ABB-5.1

SKILLING - HELLE - CHRISTIANSEN - ROBERTSON Structural & Civil Engineers

PROJECT THE WORLD TRADE CENTER | TITLE CORE PERIMETER ELEVATION FLOORS 10-33 & 35-40 | DATE 9-6-67

REVISIONS
11-22-67
9-18-68

501 601 701 801 901 1001

*Denotes Floor 13 Tower B only

1C

ref. fl. line

Stud spacing see sched. 6-AB8-50

140'-11" 140'-3" 133'-7" 126'-11" 120'-3" 113'-7" 106'-11" 100'-3" 93'-7" 86'-11" 80'-3" 73'-7" 66'-11" 60'-3"

8½" 10"* 8½" 10"* 8½" 10"* 8½" 10"* 8⅝" 9⅞"* 8 7/16" 9 15/16"* 8½" 10"* 8½" 10"* 8 7/16" 9 15/16"* 8⅜" 9⅞"* 8½" 10"* 8½" 10"* 8½" 10"* 8½" 10"*

Truss seats

6-AB8-12 See 6-AB8-13 6-AB8-12

14 15 15 15 15 15 15 15 15 15 15 15 15 15 14

Truss seat detail no.

Floors 10-33 & 35-40 Tower A
Floors 13-33 & 35-40 Tower B
1A (Studs spacing see schedule 6-AB8-50)

Ref. fl. line

See 6-AB8-52

33 33 33 33 33 33 34 33 33 33 33 33 33 33

501 601 701 801 901 1001

Floor 10, 11 & 12 Tower B

LESLIE E. ROBERTSON No. 34360 REGISTERED PROFESSIONAL ENGINEER UNIVERSITY OF THE STATE OF NEW YORK

6-AB8-6

SKILLING - HELLE - CHRISTIANSEN - ROBERTSON Structural & Civil Engineers

PROJECT THE WORLD TRADE CENTER | TITLE CORE PERIMETER ELEVATION-FLOOR 34 | DATE 9-6-67

REVISIONS
11-22-67

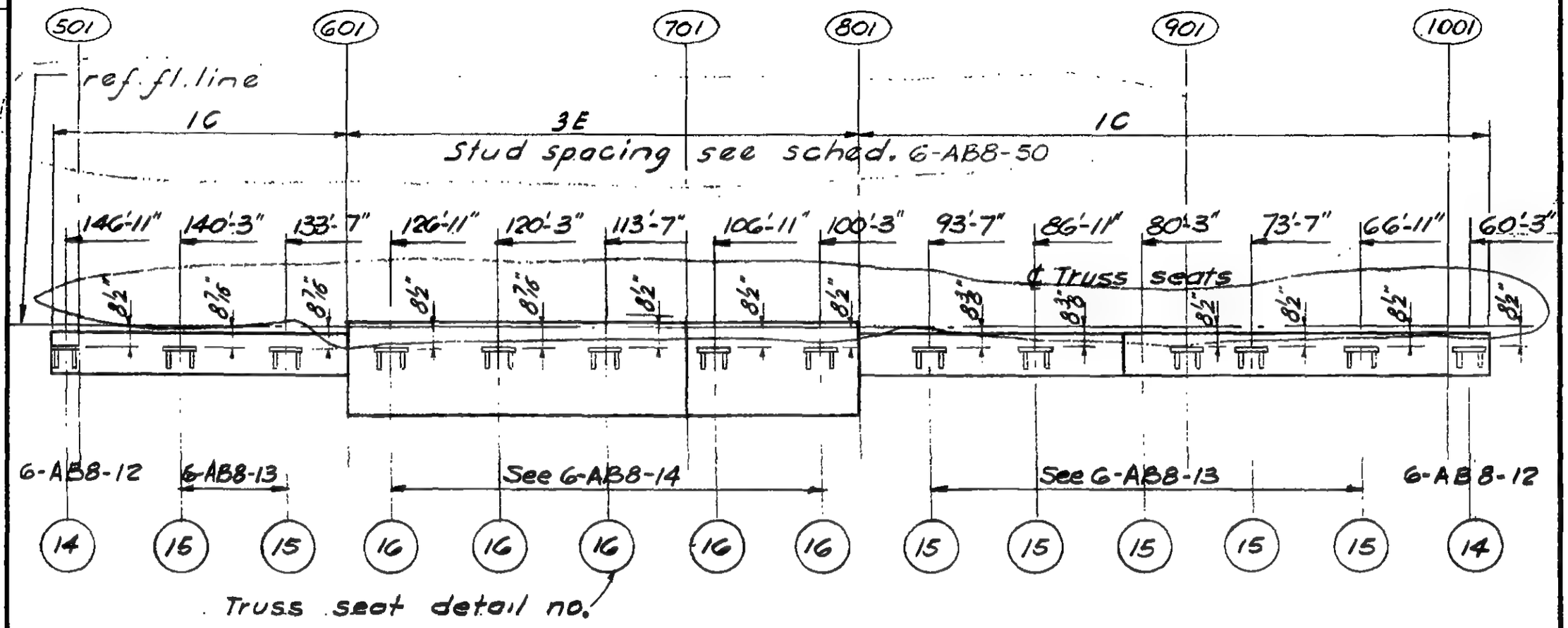

LICENSED PROFESSIONAL ENGINEER
LESLIE E. ROBERTSON
No. 34360
UNIVERSITY OF THE STATE OF NEW YORK

R

6-AB8-7

SKILLING - HELLE - CHRISTIANSEN - ROBERTSON Structural & Civil Engineers

PROJECT THE WORLD TRADE CENTER | TITLE TRUSS SEAT DETAIL 10 | DATE 9-6-67

REVISIONS
11-22-67

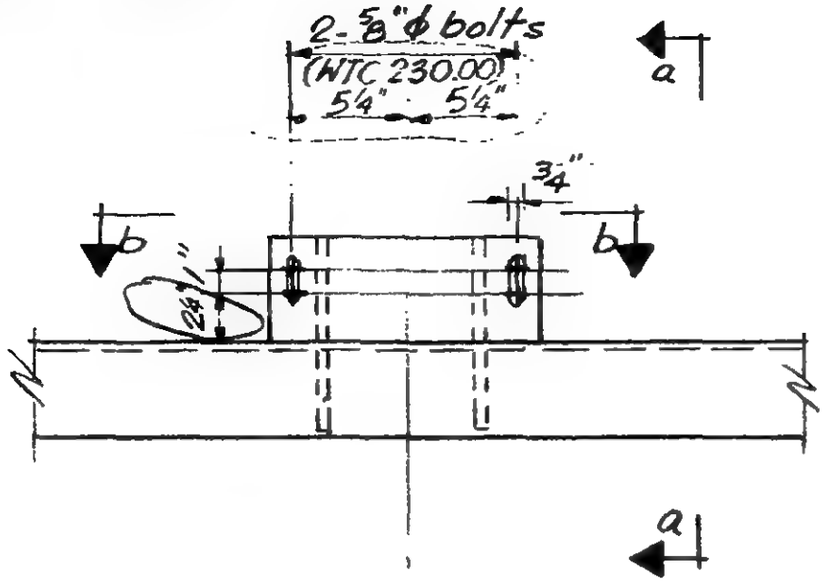

Plan

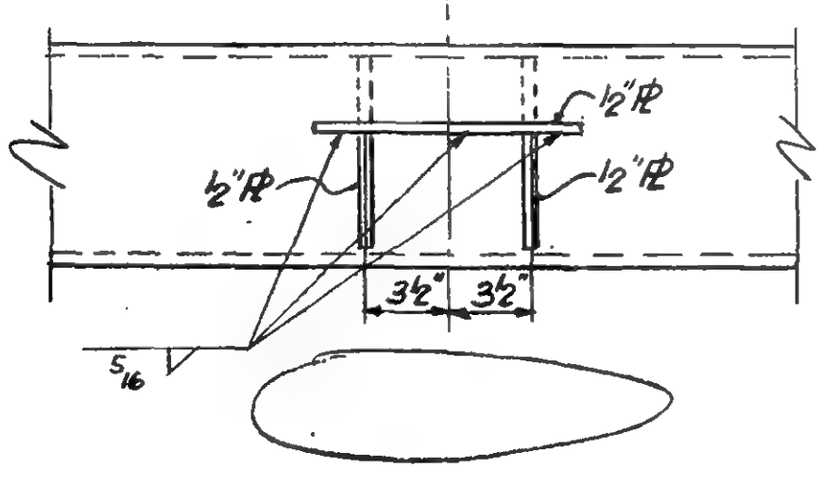

Section b-b

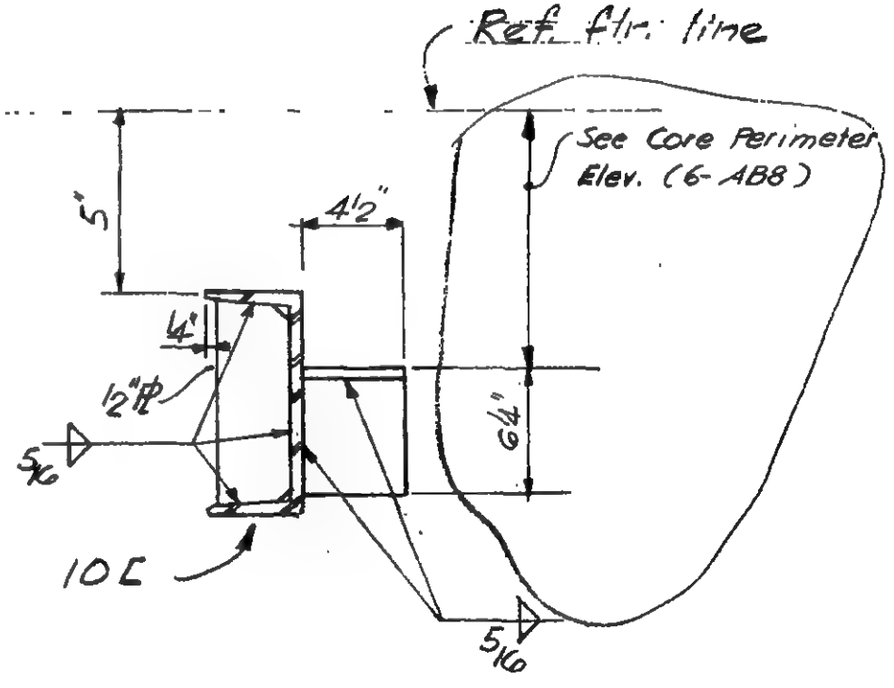

Section a-a

LICENSED PROFESSIONAL ENGINEER
LESLIE E. ROBERTSON
No. 34360
UNIVERSITY OF THE STATE OF NEW YORK

R

6-AB8-8

SKILLING - HELLE - CHRISTIANSEN - ROBERTSON Structural & Civil Engineers

PROJECT THE WORLD TRADE CENTER | TITLE TRUSS SEAT DETAIL II | DATE 9-6-67

REVISIONS
11-22-67

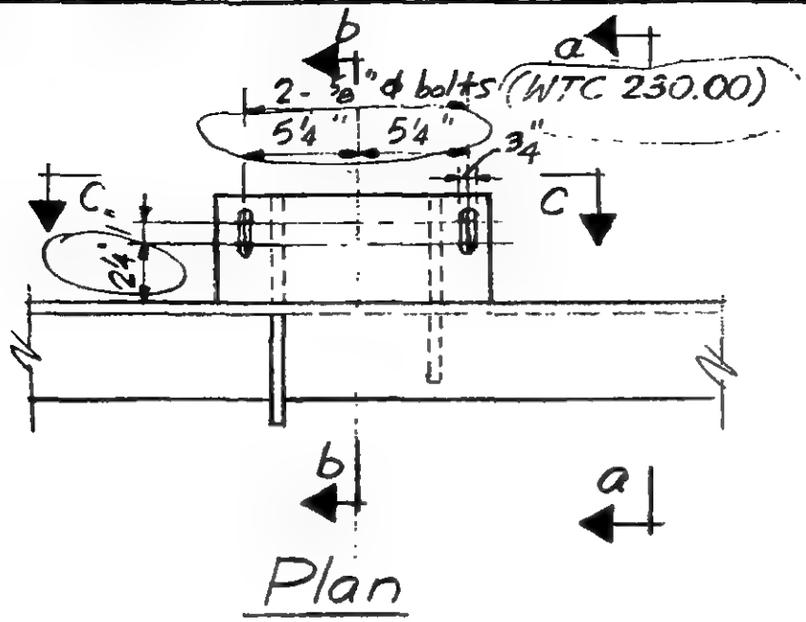

Plan

NOTE
Section a-a same as shown for detail 10 see 6-AB8-8

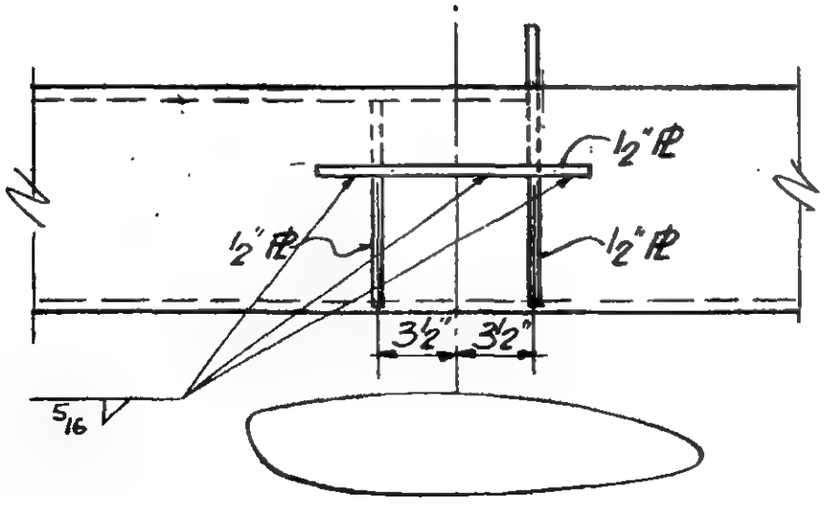

Section c-c

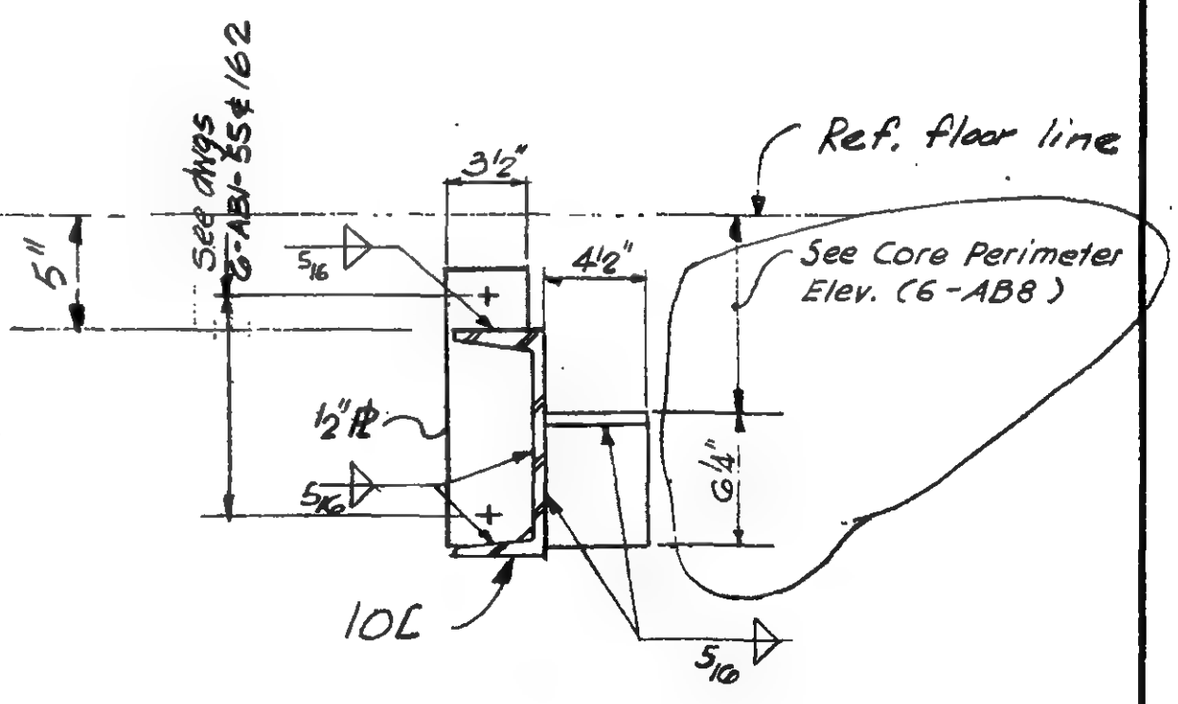

Section b-b

LICENSED PROFESSIONAL ENGINEER
LESLIE E. ROBERTSON
No. 34360
UNIVERSITY OF THE STATE OF NEW YORK

R

6-AB8-9

SKILLING - HELLE - CHRISTIANSEN - ROBERTSON Structural & Civil Engineers

PROJECT THE WORLD TRADE CENTER | TITLE TRUSS SEAT DETAIL 12 | DATE 9-6-67

REVISIONS
11-22-67

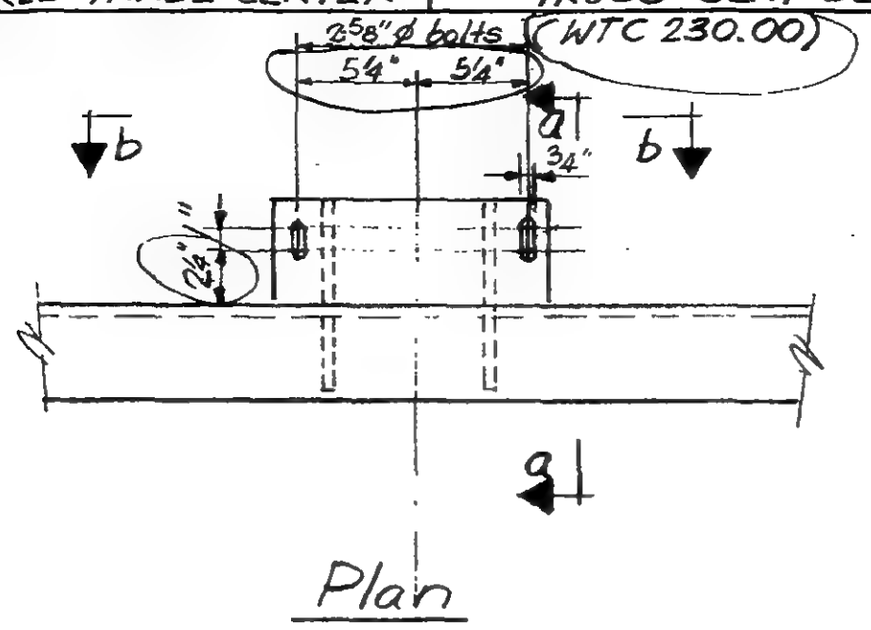

Plan

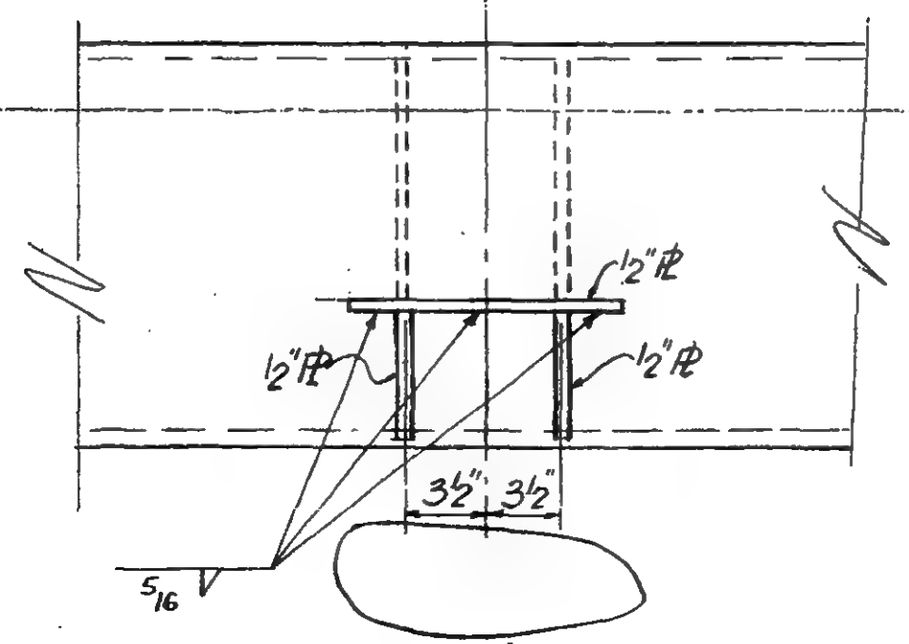

Section b-b

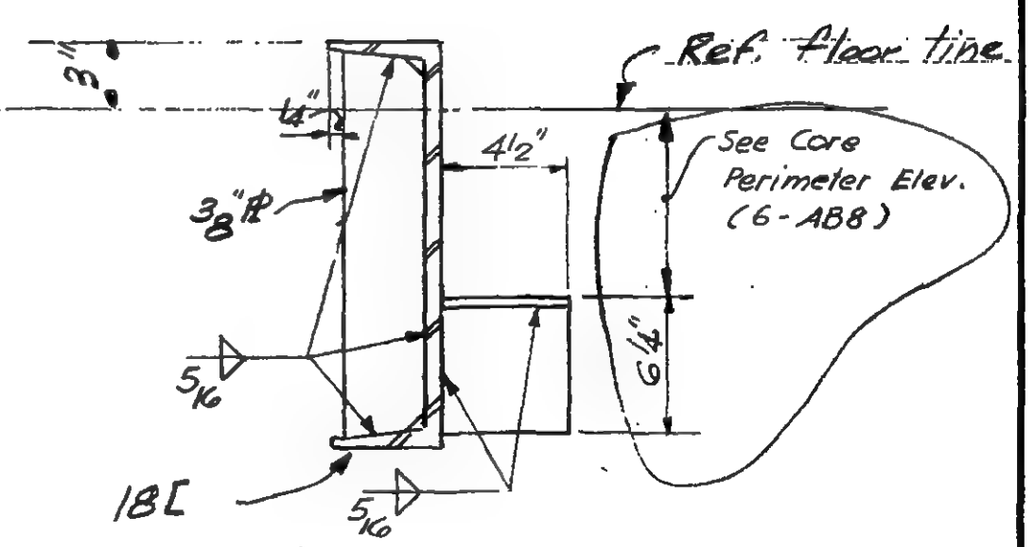

Section a-a

LICENSED PROFESSIONAL ENGINEER
LESLIE E. ROBERTSON
No. 34360
UNIVERSITY OF THE STATE OF NEW YORK

R

6-AB8-10

SKILLING - HELLE - CHRISTIANSEN - ROBERTSON Structural & Civil Engineers

PROJECT THE WORLD TRADE CENTER | TITLE TRUSS SEAT DETAIL 13 | DATE 9-6-67

REVISIONS
11-22-67

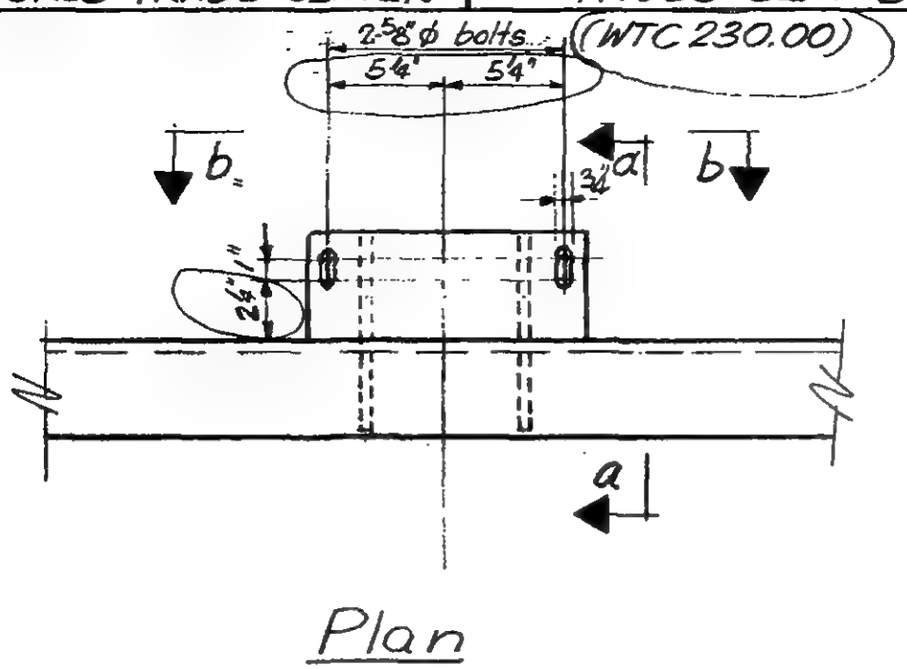

Plan

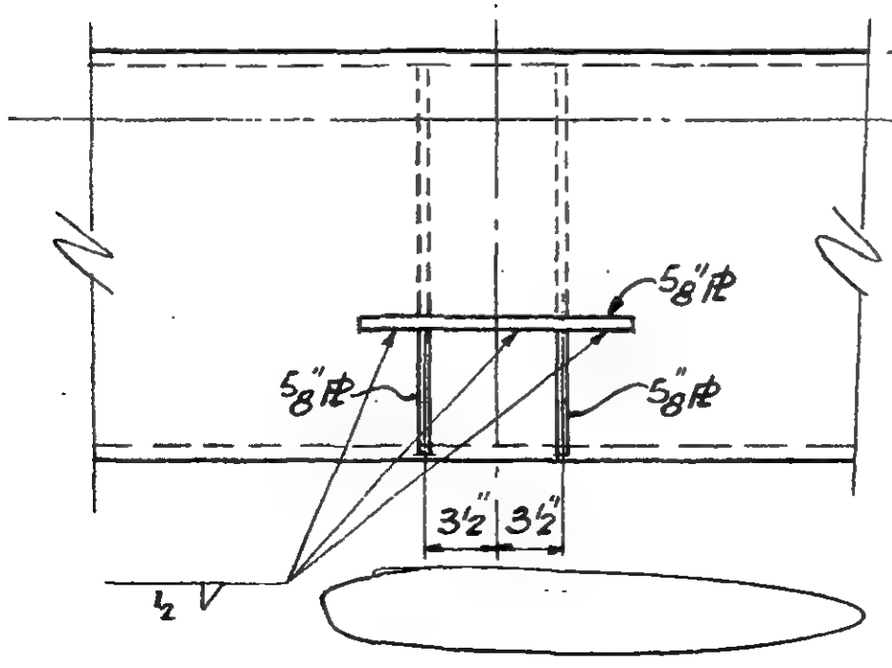

Section b-b

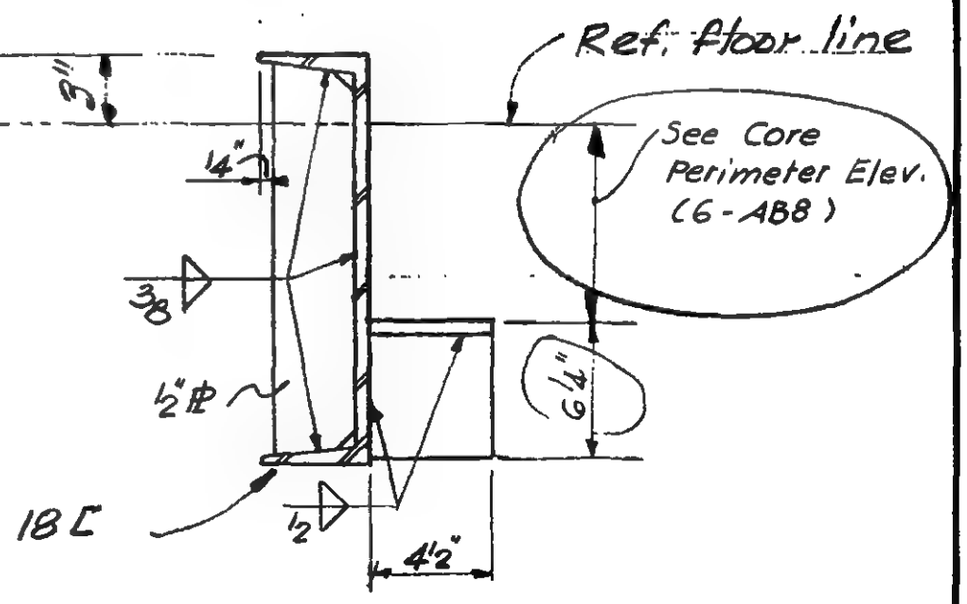

Section a-a

LICENSED PROFESSIONAL ENGINEER
LESLIE E. ROBERTSON
No. 34360
UNIVERSITY OF THE STATE OF NEW YORK

R

6-AB8-11

SKILLING - HELLE - CHRISTIANSEN - ROBERTSON Structural & Civil Engineers

PROJECT THE WORLD TRADE CENTER | TITLE TRUSS SEAT DETAIL 14 | DATE 9-6-67

EVISIONS

11-22-67

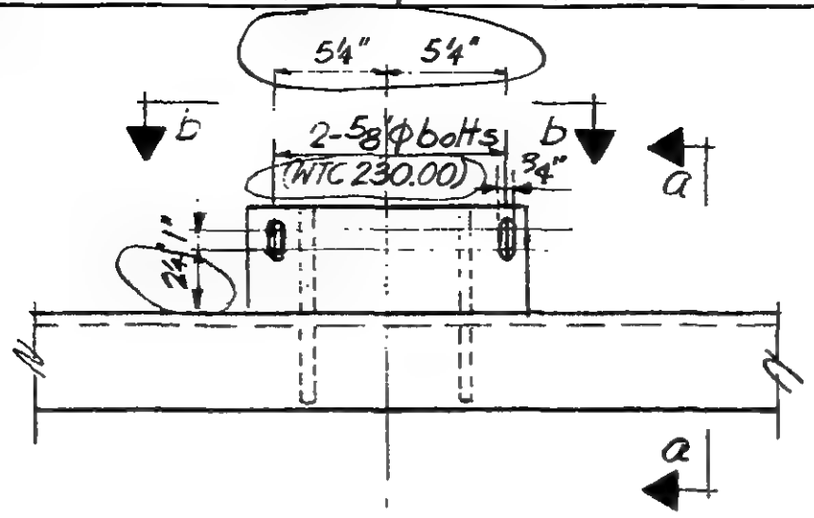

Plan

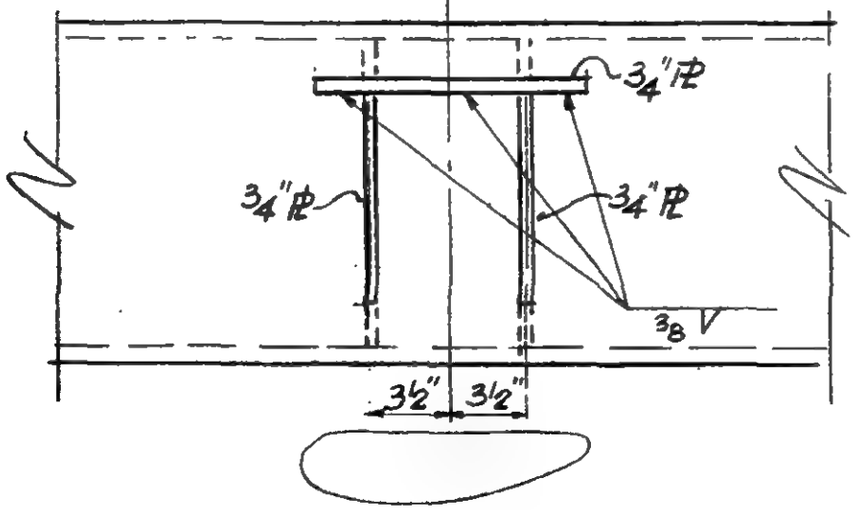

Section b-b

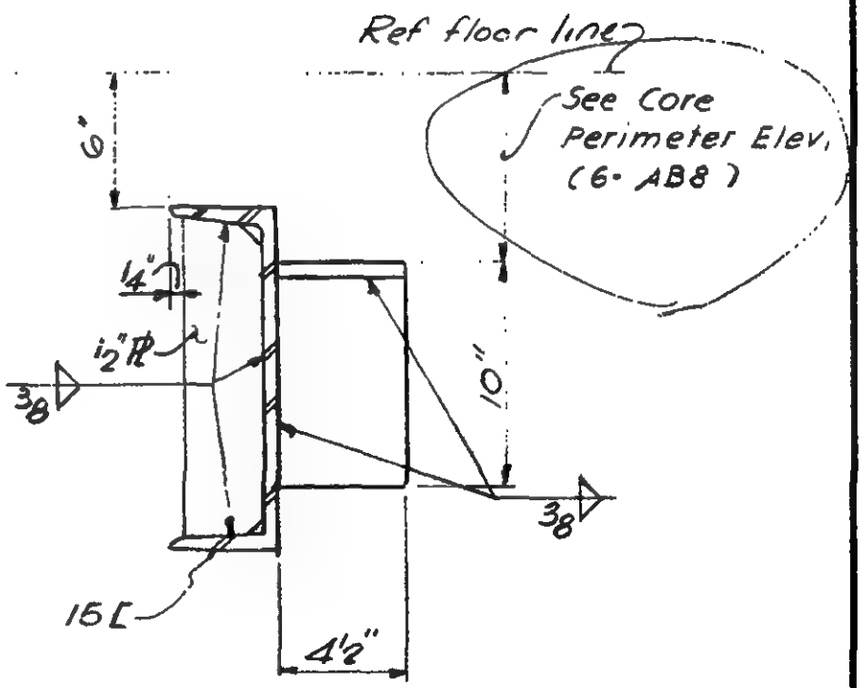

Section a-a

LICENSED PROFESSIONAL ENGINEER
LESLIE E. ROBERTSON
No. 34260
UNIVERSITY OF THE STATE OF N.Y.

6-AB8-12

SKILLING - HELLE - CHRISTIANSEN - ROBERTSON Structural & Civil Engineers

PROJECT THE WORLD TRADE CENTER | TITLE TRUSS SEAT DETAIL 15 | DATE 9-6-67

REVISIONS

11-22-67

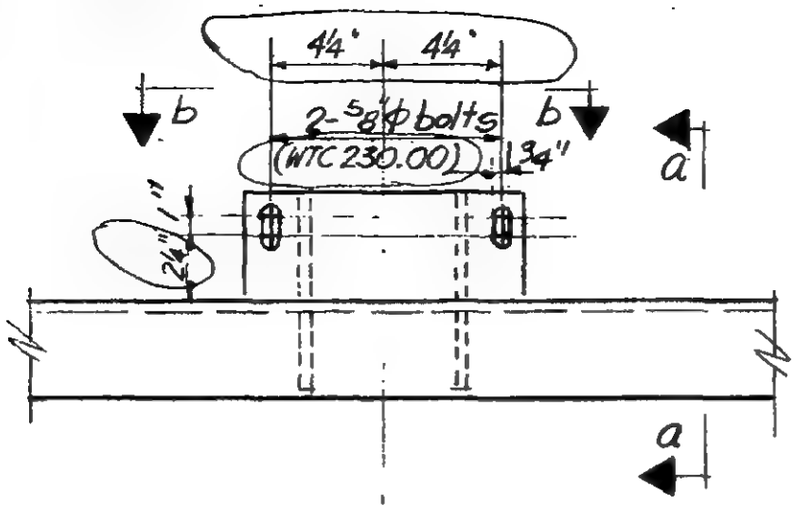

Plan

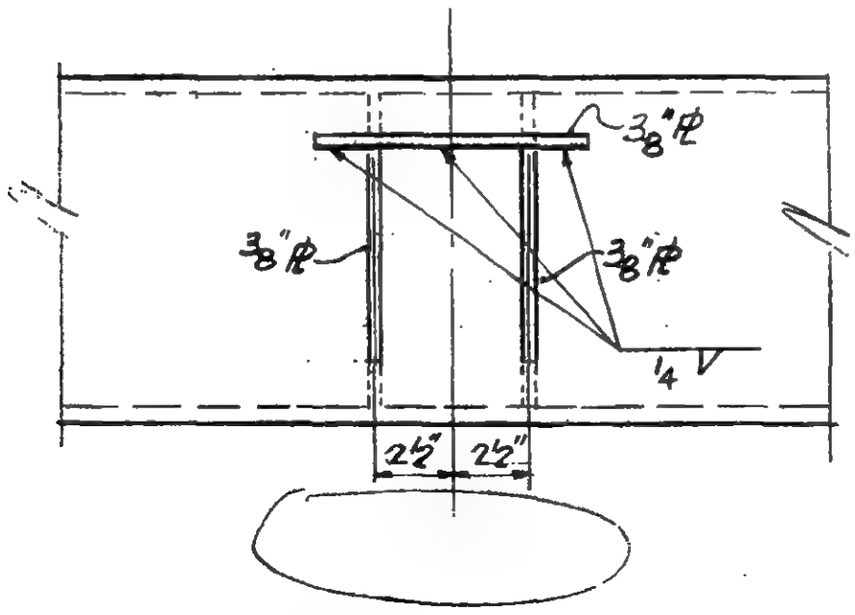

Section b-b

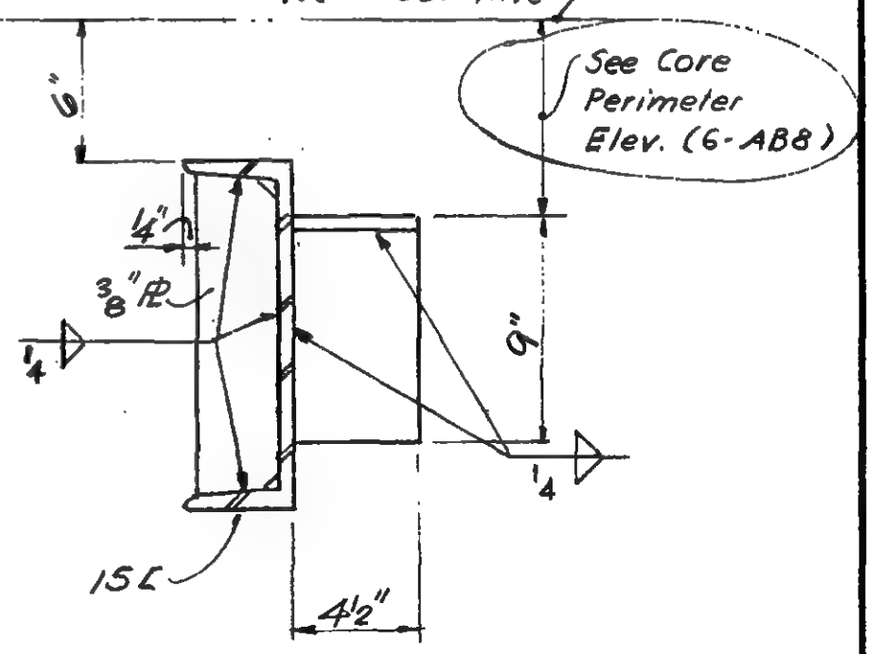

Section a-a

LICENSED PROFESSIONAL ENGINEER
LESLIE E. ROBERTSON
No. 34360
UNIVERSITY OF THE STATE OF NEW YORK

6-AB8-13

SKILLING - HELLE - CHRISTIANSEN - ROBERTSON Structural & Civil Engineers

PROJECT THE WORLD TRADE CENTER | TITLE TRUSS SEAT DETAIL 16 | DATE 9-6-67

REVISIONS
11-22-67

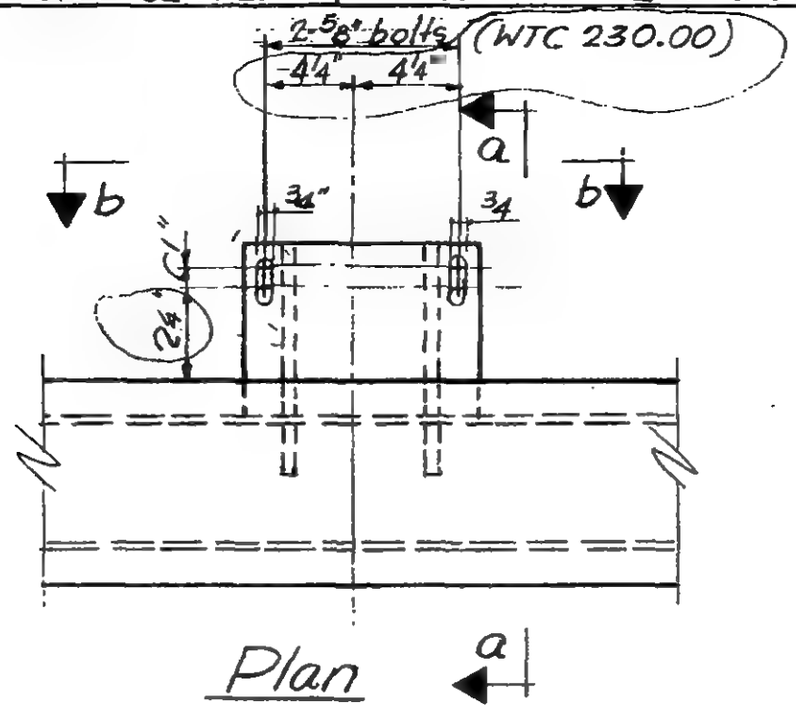

Plan

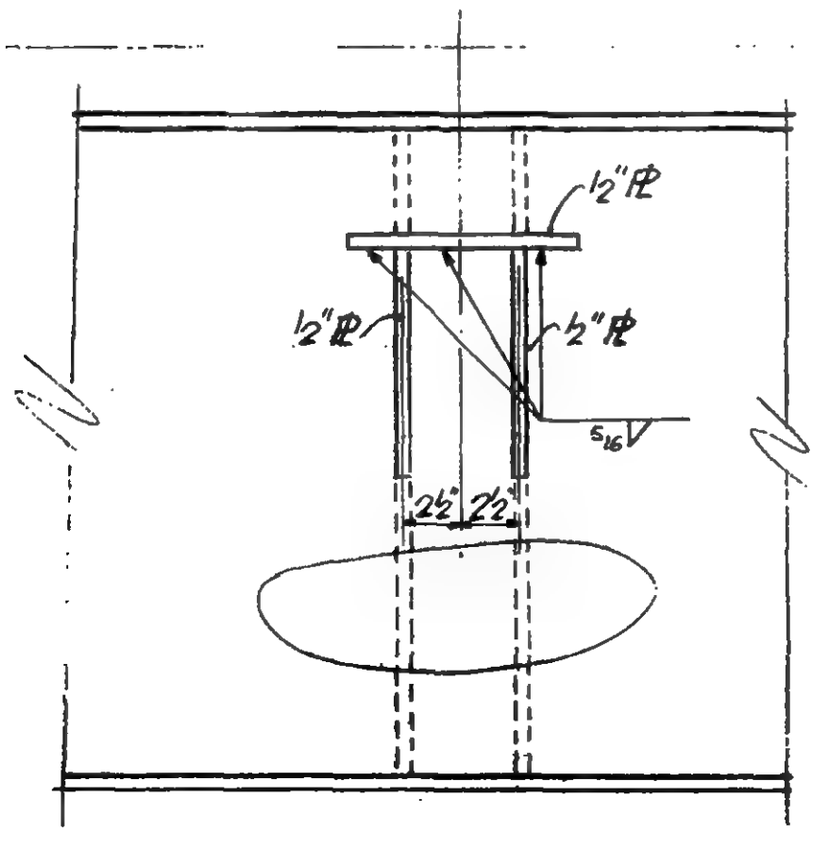

Section b-b

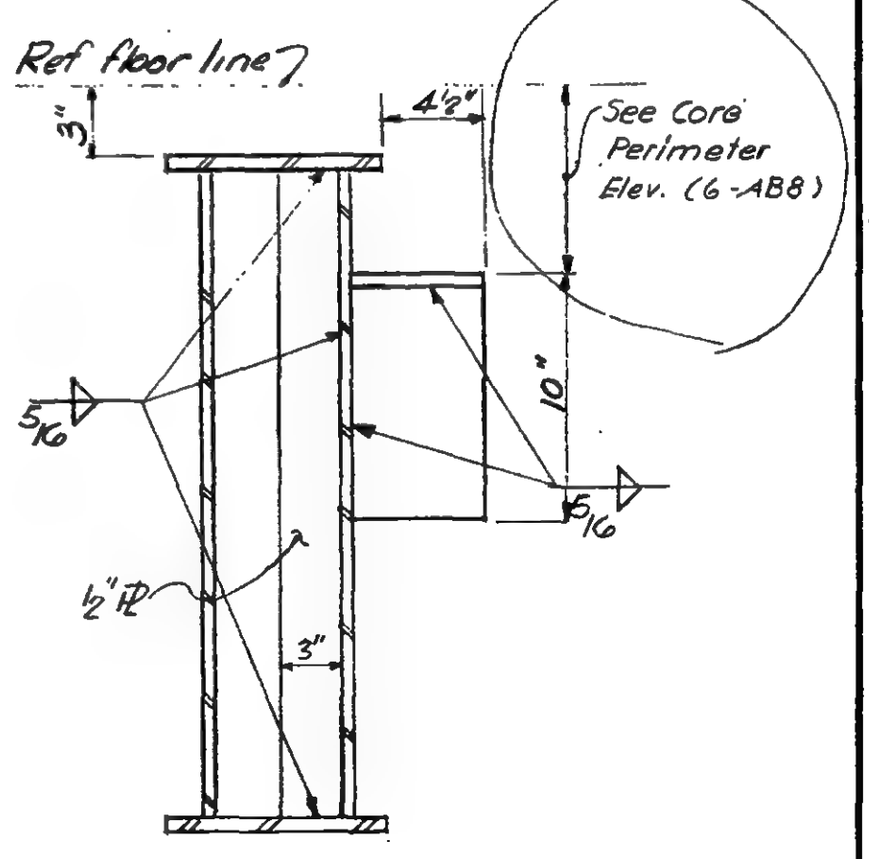

Section a-a

LICENSED PROFESSIONAL ENG'R
LESLIE E. ROBERTS, N.
NO. 34500
UNIVERSITY OF THE STATE OF N.

6-AB8-14

SKILLING - HELLE - CHRISTIANSEN - ROBERTSON Structural & Civil Engineers

PROJECT THE WORLD TRADE CENTER | TITLE CORE PERIMETER ELEVATION - FLOOR 44 TOWER A | DATE 11-22-67

REVISIONS

3-5-68

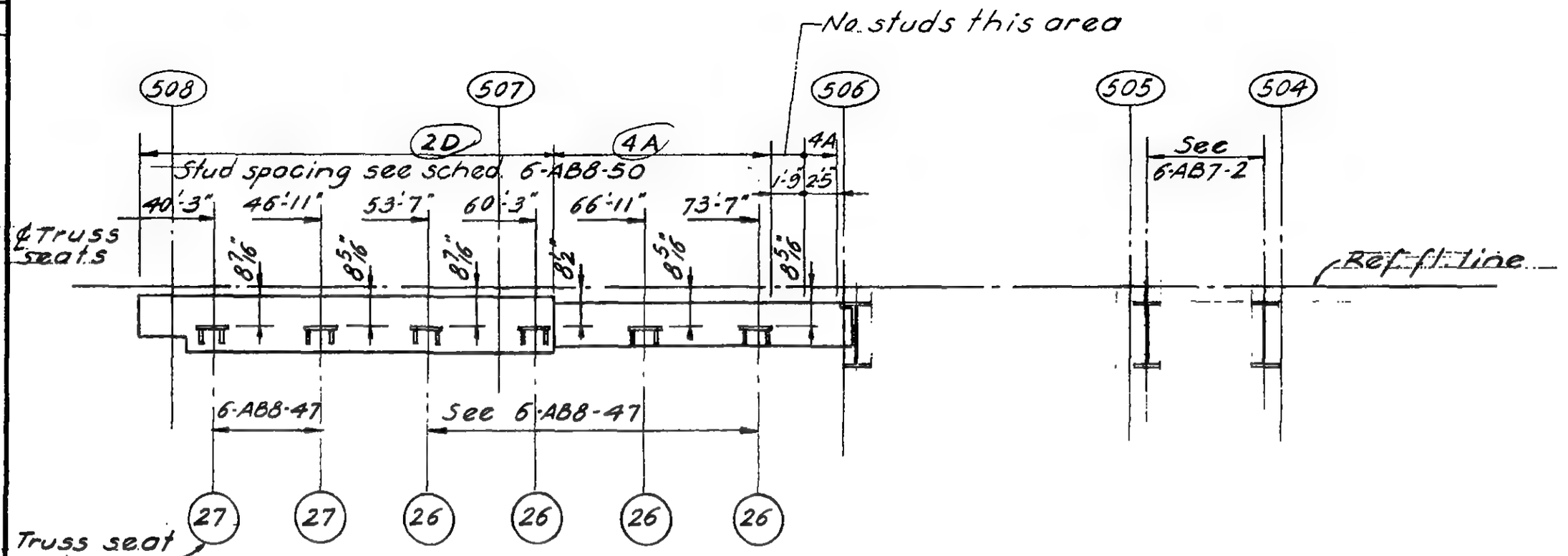

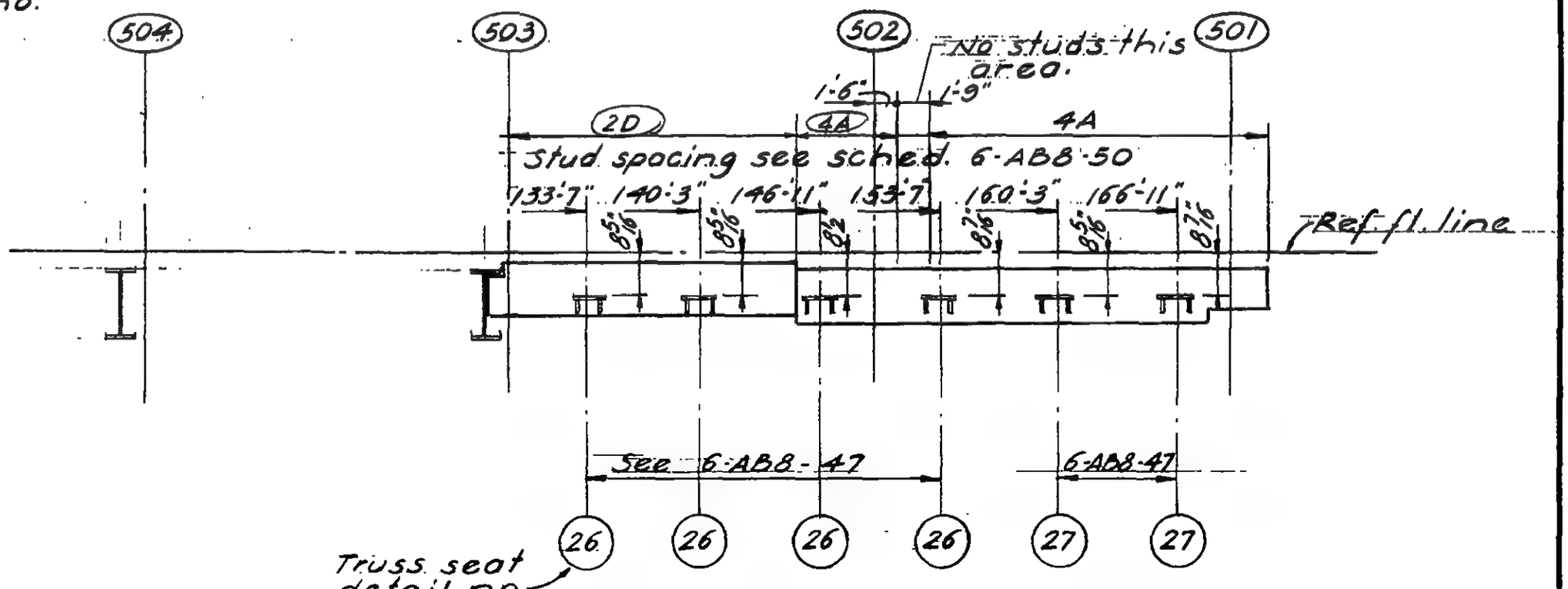

LICENSED PROFESSIONAL ENGINEER
LESLIE E. ROBERTSON
No. 34360
UNIVERSITY OF THE STATE OF NEW YORK

6-AB8-15

SKILLING - HELLE - CHRISTIANSEN - ROBERTSON Structural & Civil Engineers

PROJECT THE WORLD TRADE CENTER | TITLE CORE PERIMETER ELEVATION - FLOOR 44 TOWER B | DATE 11-22-67

REVISIONS

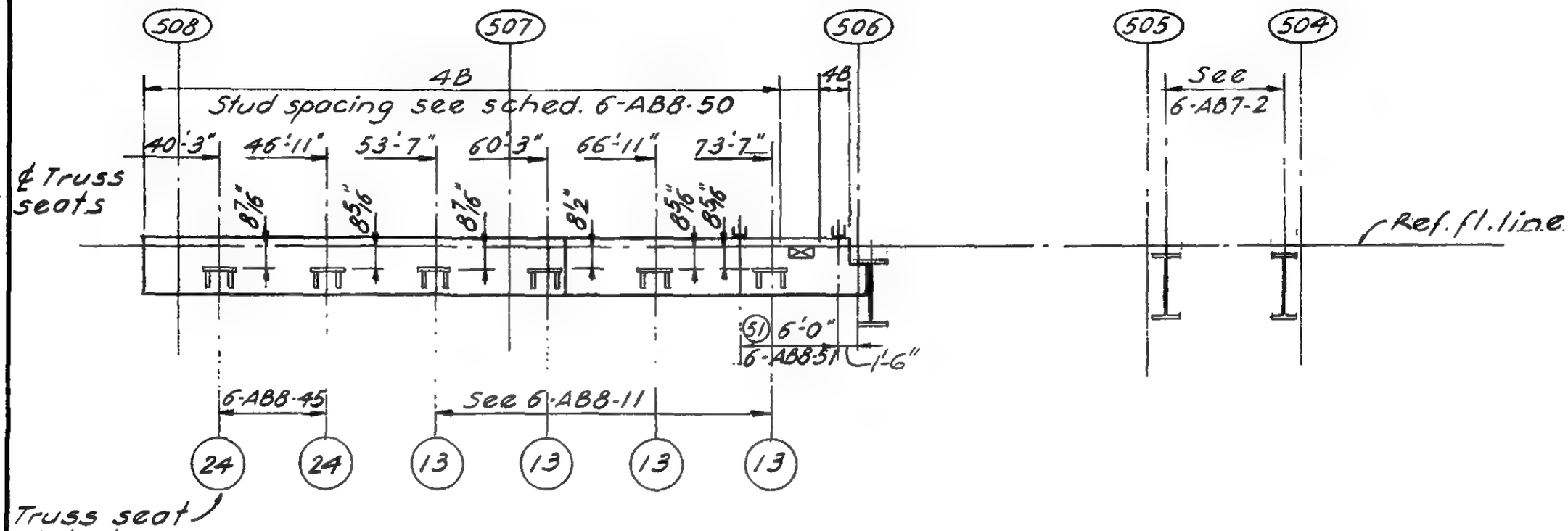

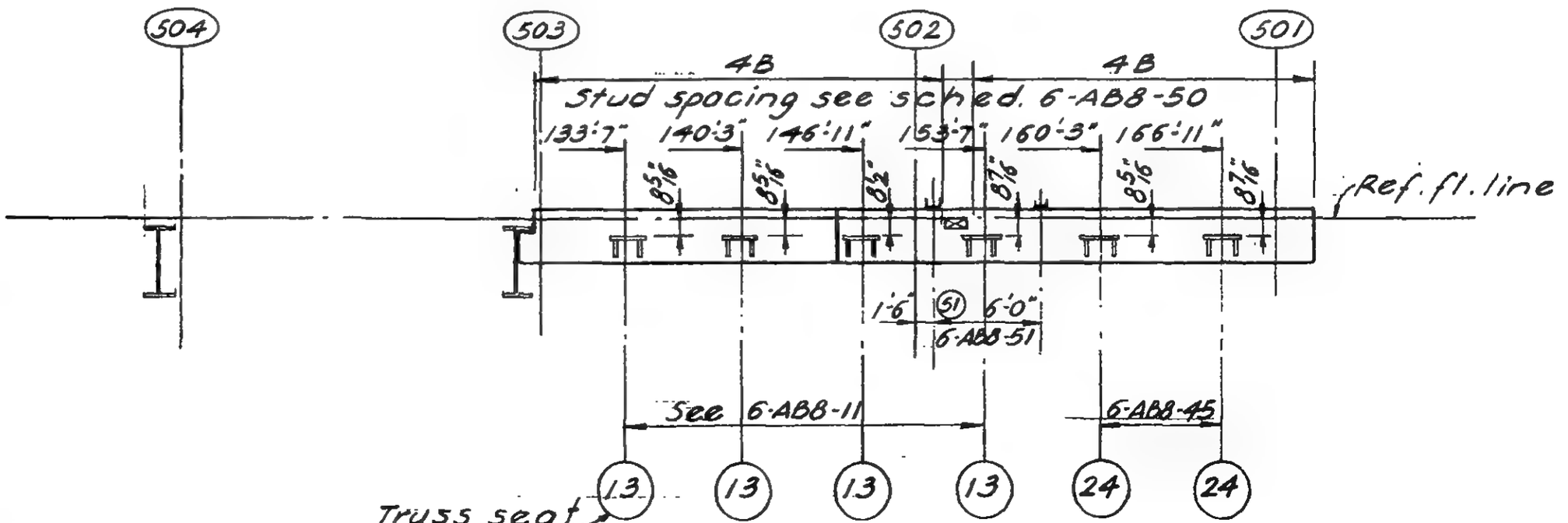

LICENSED PROFESSIONAL ENGINEER
LESLIE E. ROBERTSON
No. 34360
UNIVERSITY OF THE STATE OF NEW YORK

6-AB8-15.1

SKILLING - HELLE - CHRISTIANSEN - ROBERTSON Structural & Civil Engineers

PROJECT THE WORLD TRADE CENTER | TITLE CORE PERIMETER ELEVATION-FLOORS ~~44~~ TOWER & 78 | DATE 11-22-67

REVISIONS

3-5-68

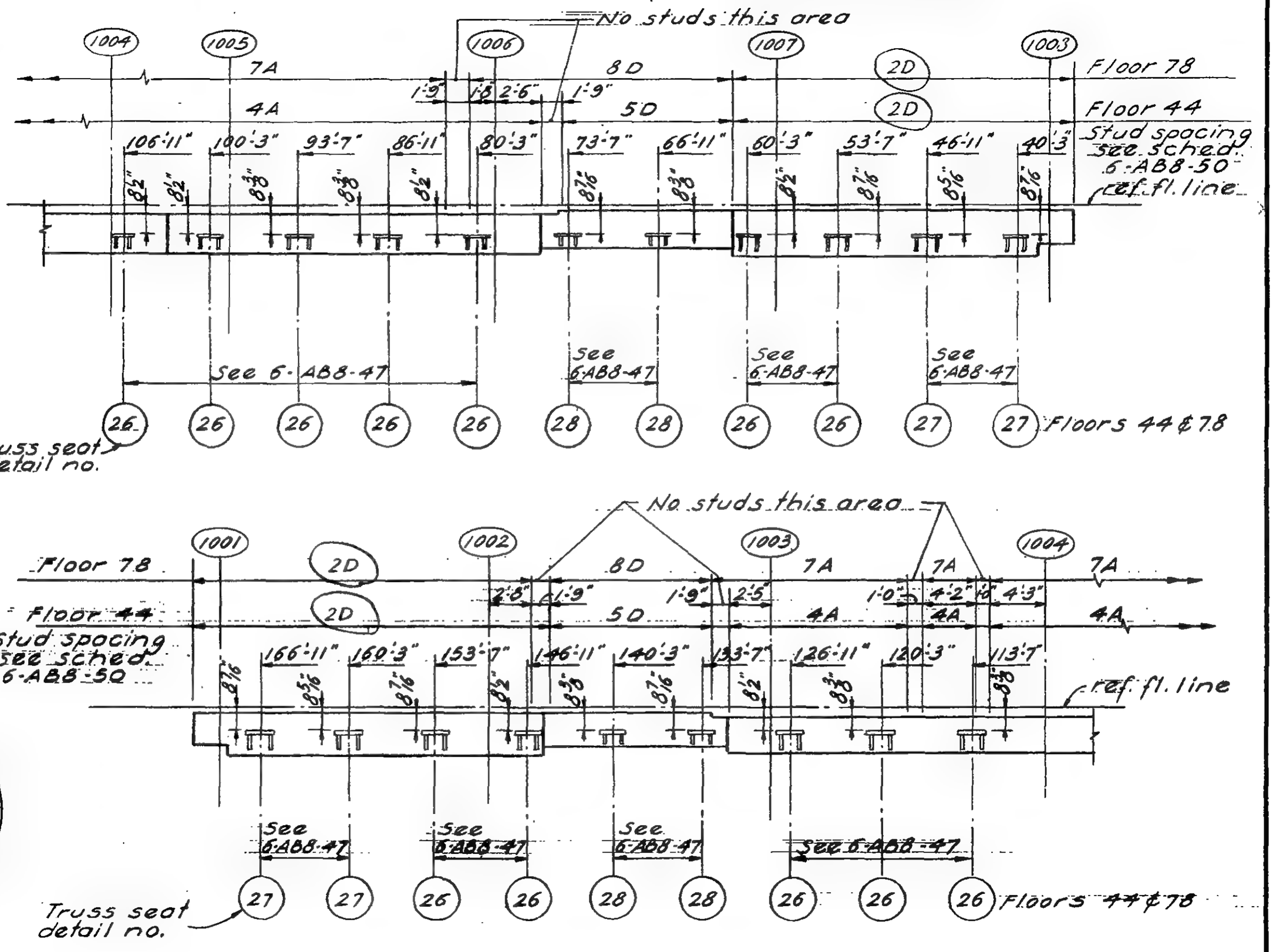

LICENSED PROFESSIONAL ENGINEER
LESLIE E. ROBERTSON
No. 34360
UNIVERSITY OF THE STATE OF NEW YORK

6-AB8-16

SKILLING - HELLE - CHRISTIANSEN - ROBERTSON Structural & Civil Engineers

PROJECT THE WORLD TRADE CENTER | TITLE CORE PERIMETER ELEVATION - FLOOR 44 TOWER B | DATE 11-22-67

REVISIONS

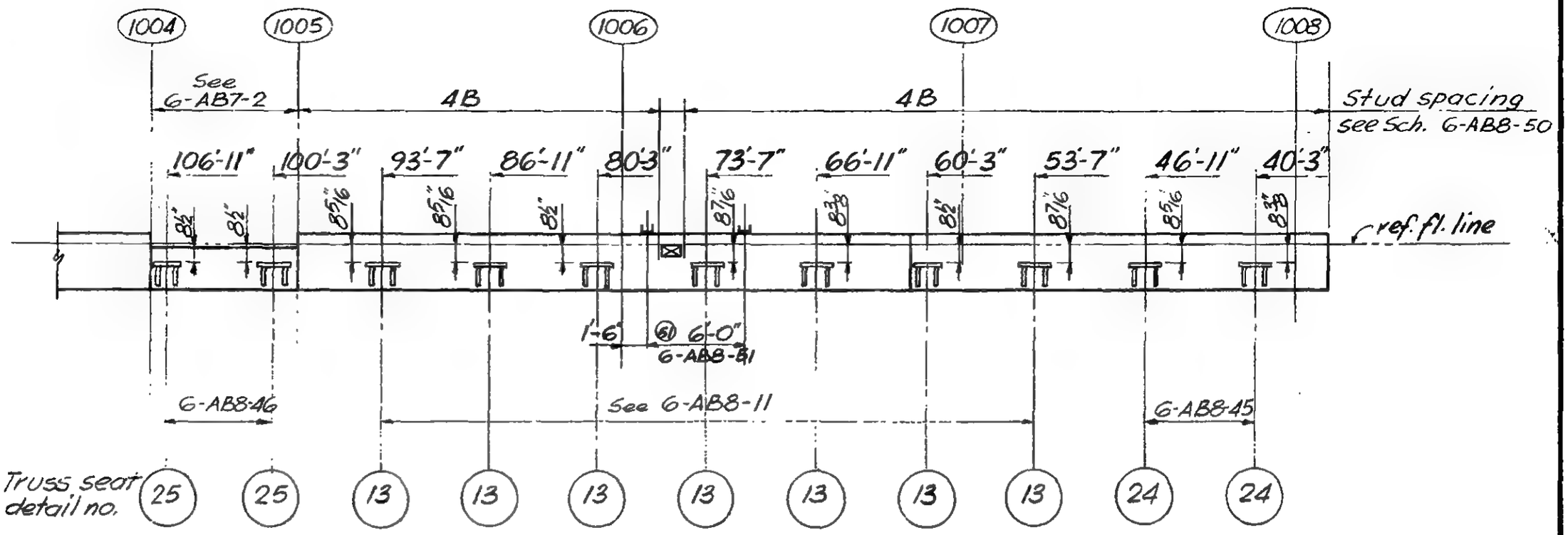

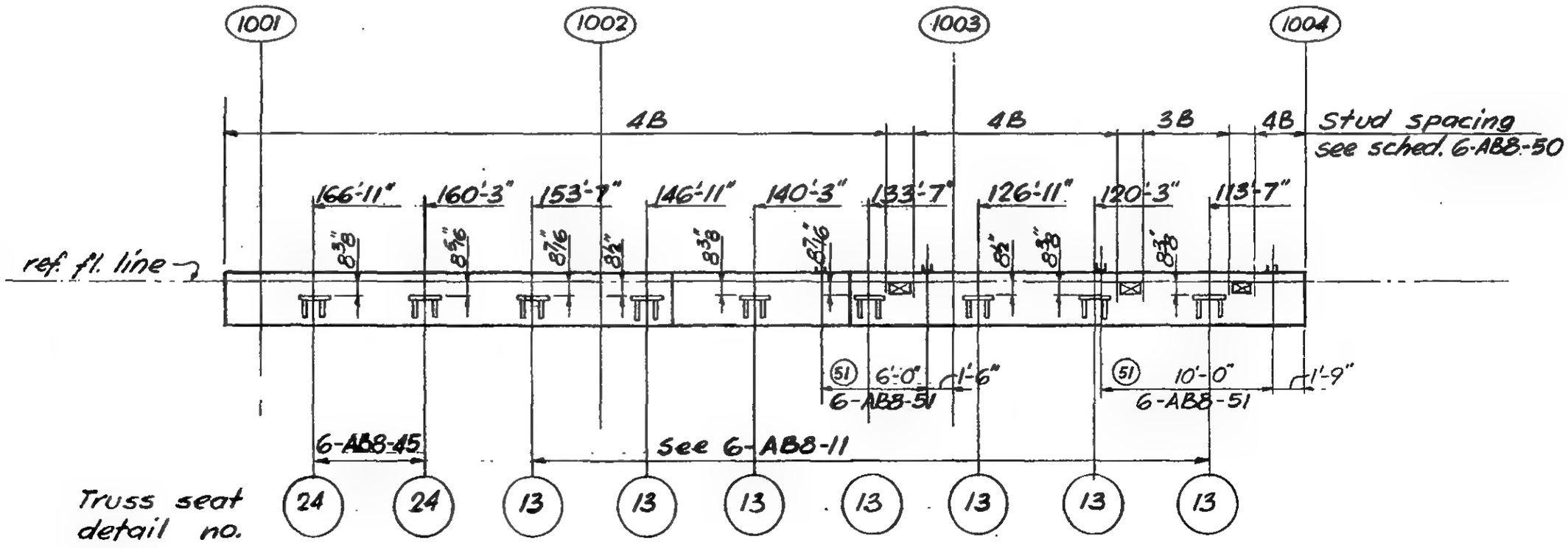

LICENSED PROFESSIONAL ENGINEER
LESLIE E. ROBERTSON
No. 34360
UNIVERSITY OF THE STATE OF NEW YORK

6-ABB-16.1

SKILLING - HELLE - CHRISTIANSEN - ROBERTSON Structural & Civil Engineers

PROJECT THE WORLD TRADE CENTER | TITLE CORE PERIMETER ELEVATION - FLOORS 45 | DATE 9-25-67

REVISIONS
11-22-67

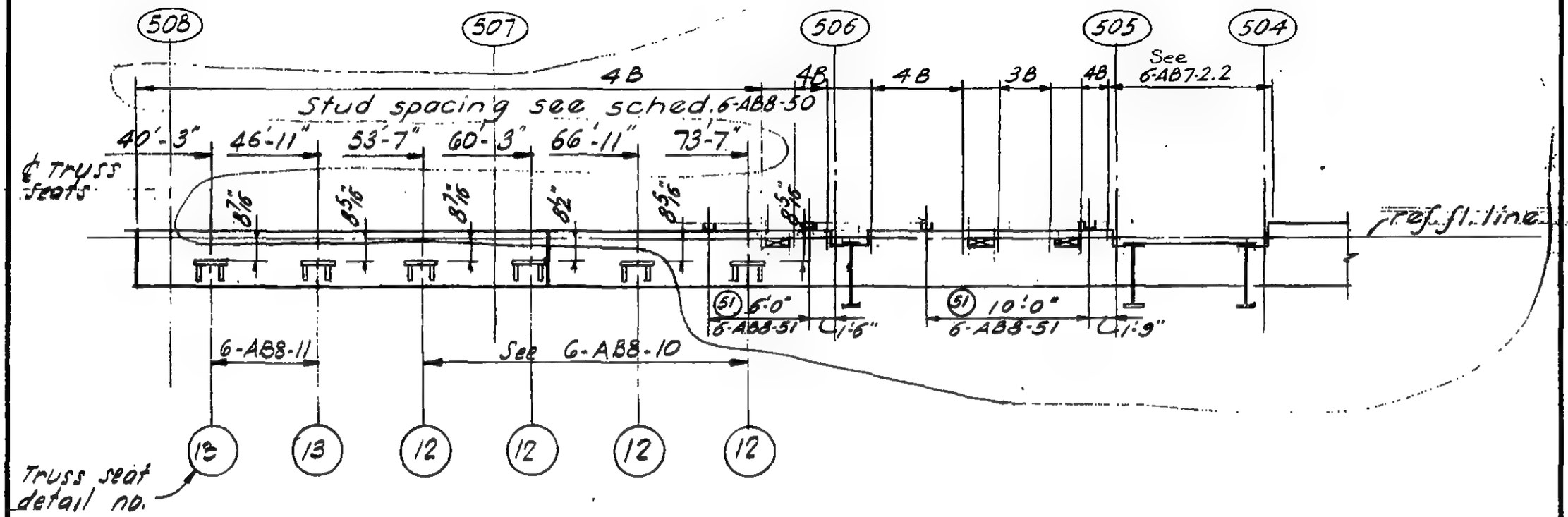

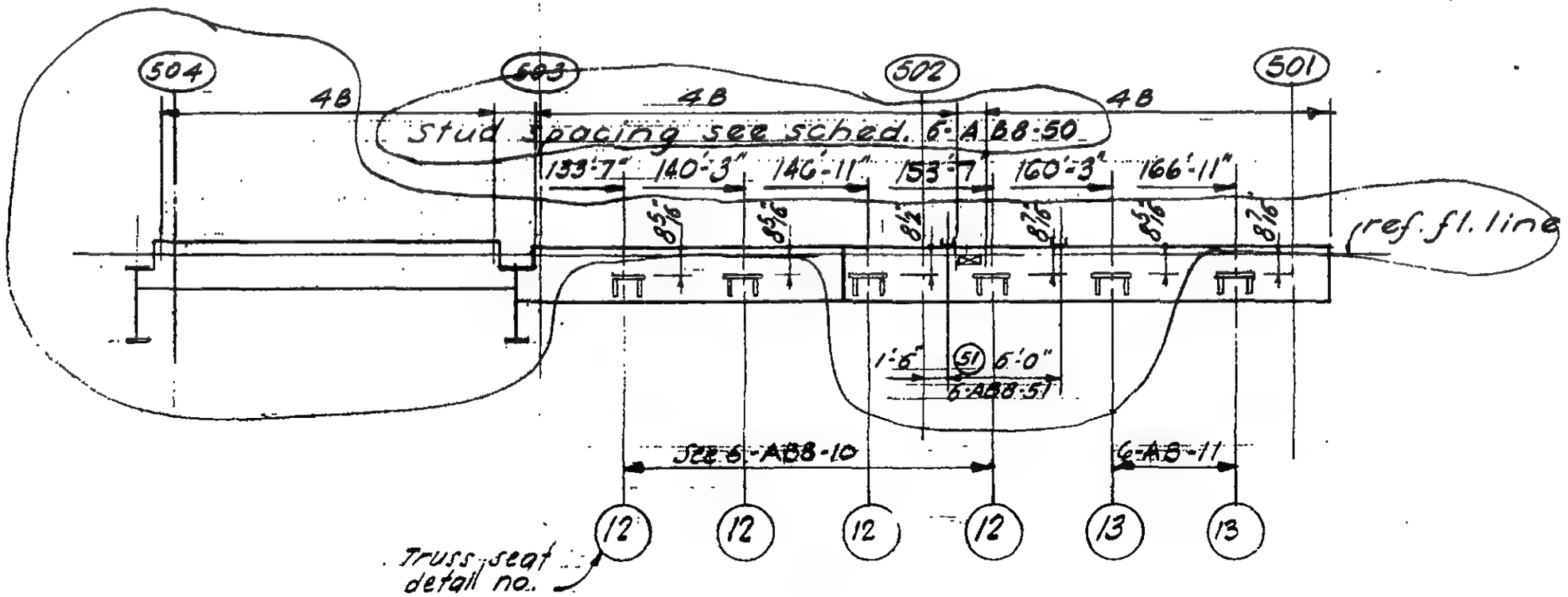

LICENSED PROFESSIONAL ENGINEER LESLIE E. ROBERTSON No. 34360 UNIVERSITY OF THE STATE OF NEW YORK

6-AB8-17

SKILLING - HELLE - CHRISTIANSEN - ROBERTSON — Structural & Civil Engineers

PROJECT: THE WORLD TRADE CENTER | TITLE: CORE PERIMETER ELEVATION - FLOORS 46-74, 79-82 | DATE: 9-25-67

REVISIONS

11-22-67

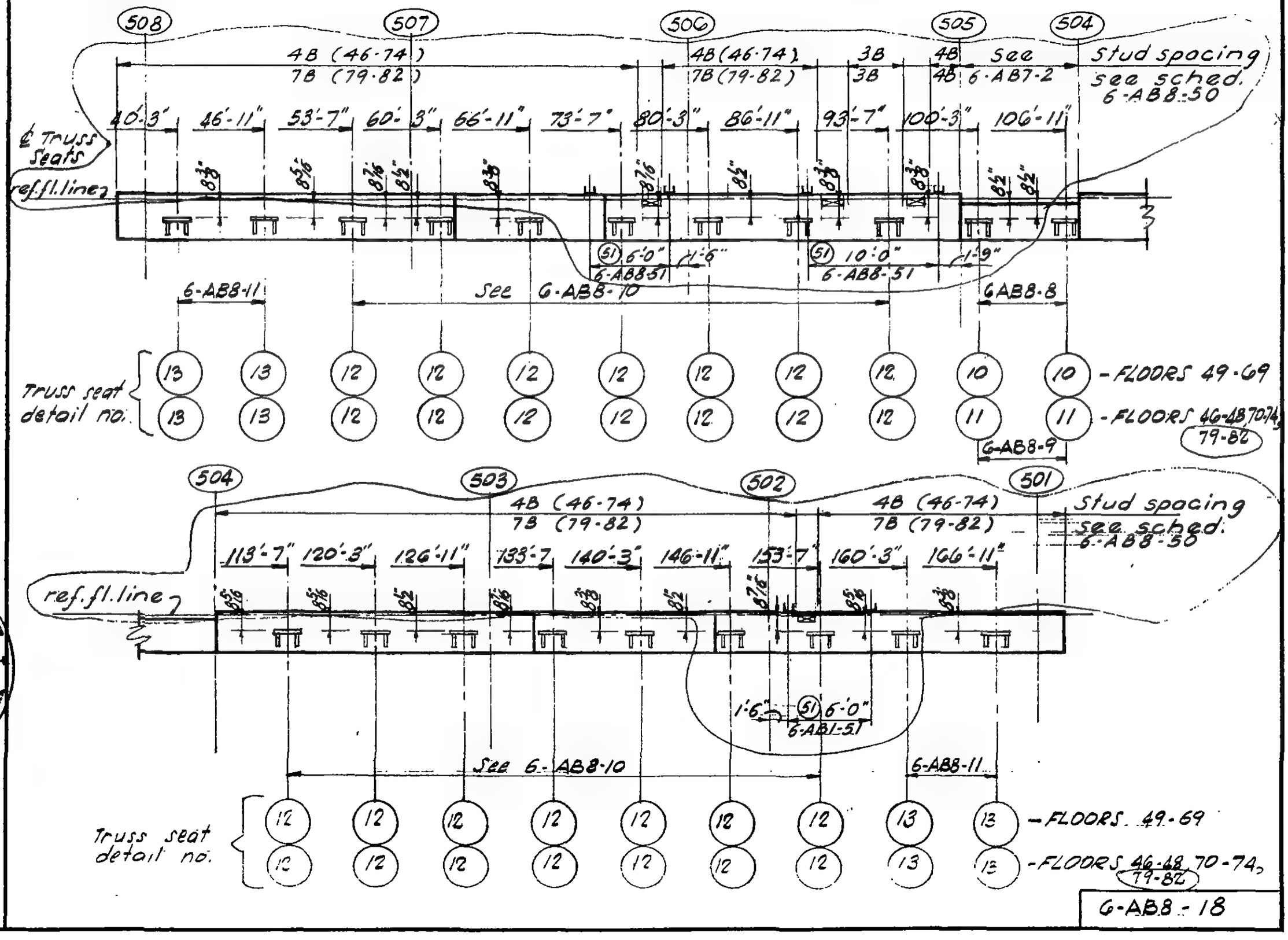

LICENSED PROFESSIONAL ENGINEER
LESLIE E. ROBERTSON
No. 34360
UNIVERSITY OF THE STATE OF NEW YORK

G-AB8-18

SKILLING - HELLE - CHRISTIANSEN - ROBERTSON Structural & Civil Engineers

PROJECT THE WORLD TRADE CENTER | TITLE CORE PERIMETER ELEVATION - FLOORS 46, 48, 49 | DATE 9-25-67

REVISIONS

11-22-67

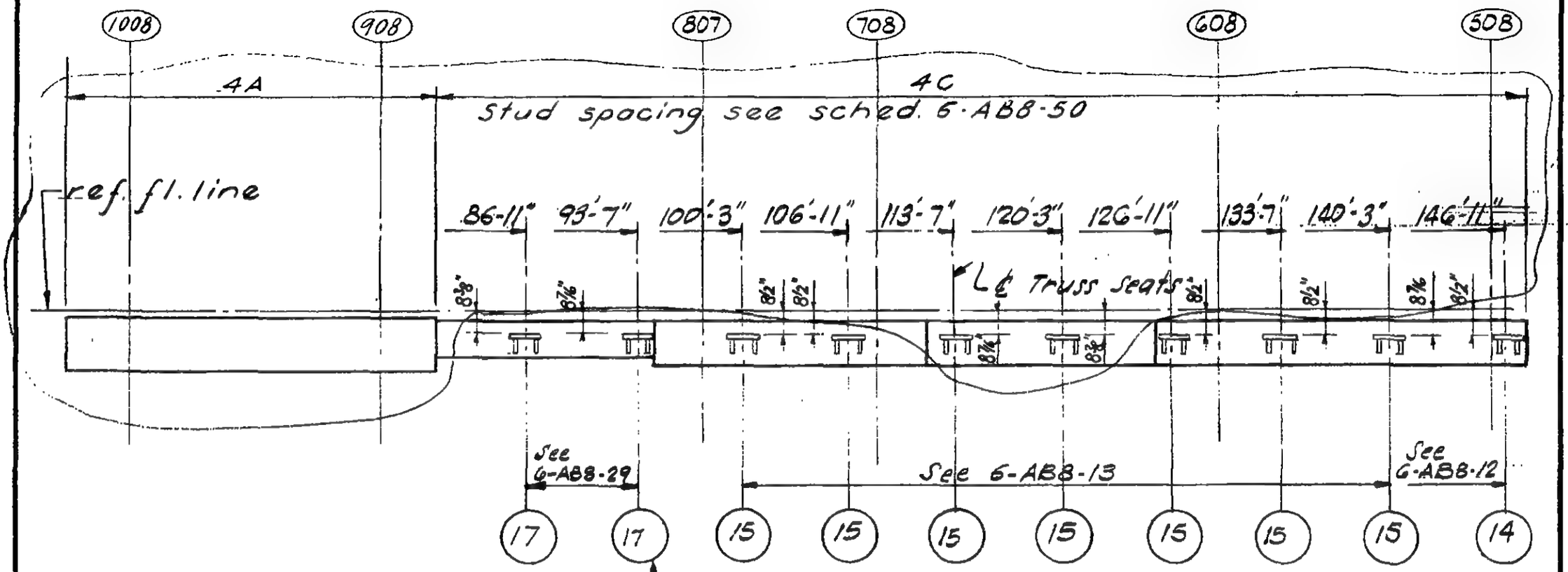

6-AB8-19

SKILLING - HELLE - CHRISTIANSEN - ROBERTSON Structural & Civil Engineers

PROJECT	TITLE	DATE
THE WORLD TRADE CENTER	CORE PERIMETER ELEVATION - FLOORS 47	9-25-67

REVISIONS

11-22-67

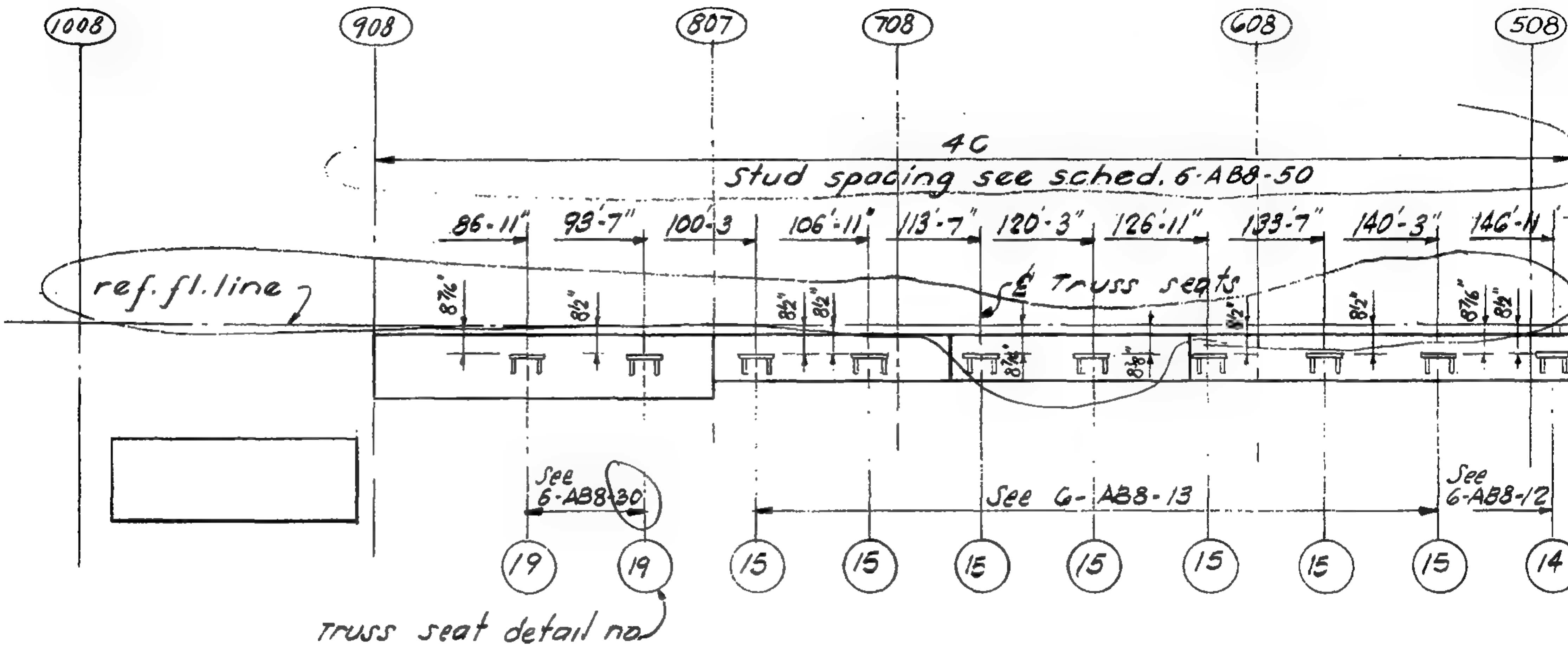

LICENSED PROFESSIONAL ENGINEER
LESLIE E. ROBERTSON
No. 34360
UNIVERSITY OF THE STATE OF NEW YORK

6-AB8-20

SKILLING - HELLE - CHRISTIANSEN - ROBERTSON Structural & Civil Engineers

PROJECT THE WORLD TRADE CENTER | TITLE CORE PERIMETER ELEVATION - FLOORS 50-55, 57-74 | DATE 9-25-67

REVISIONS
11-22-67

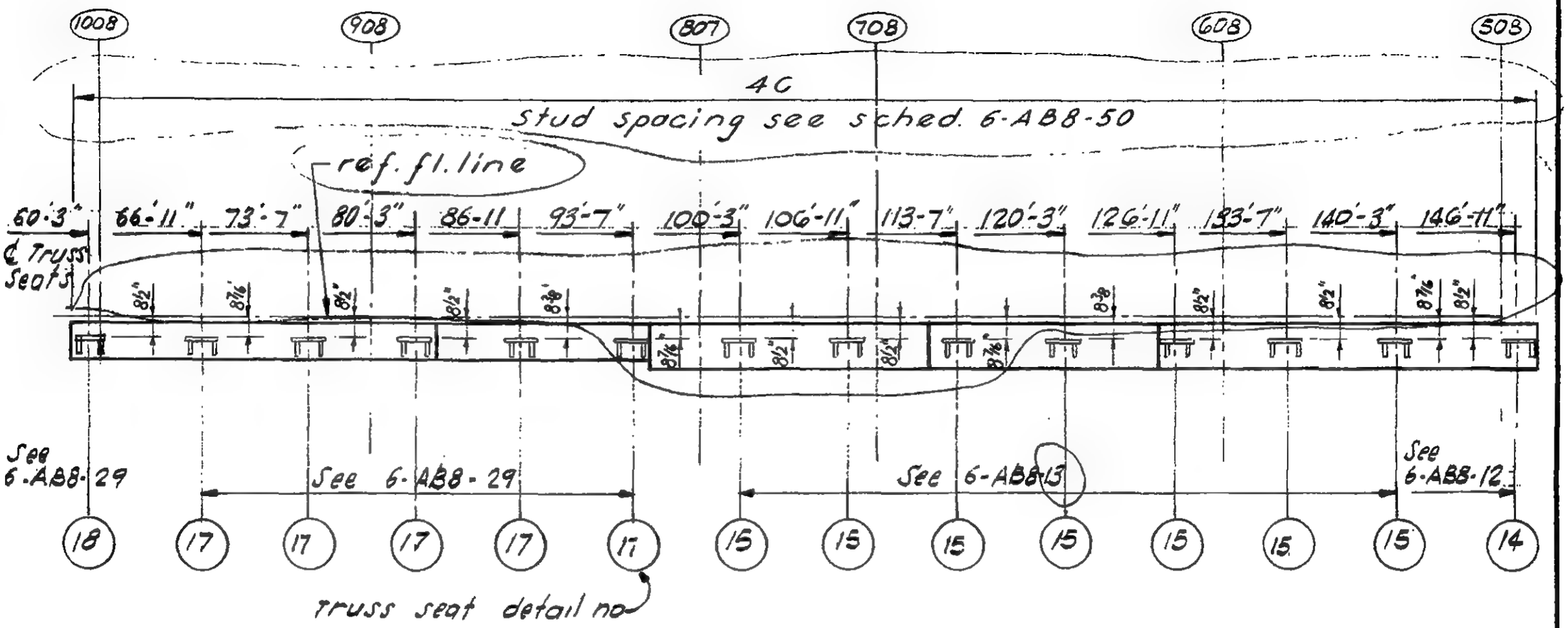

LICENSED PROFESSIONAL ENGINEER
LESLIE E. ROBERTSON
No. 34360
UNIVERSITY OF THE STATE OF NEW YORK

6-AB8-21

SKILLING - HELLE - CHRISTIANSEN - ROBERTSON Structural & Civil Engineers

PROJECT THE WORLD TRADE CENTER | TITLE CORE PERIMETER ELEVATION - FLOOR 56 | DATE 9-25-67

REVISIONS

11-22-67

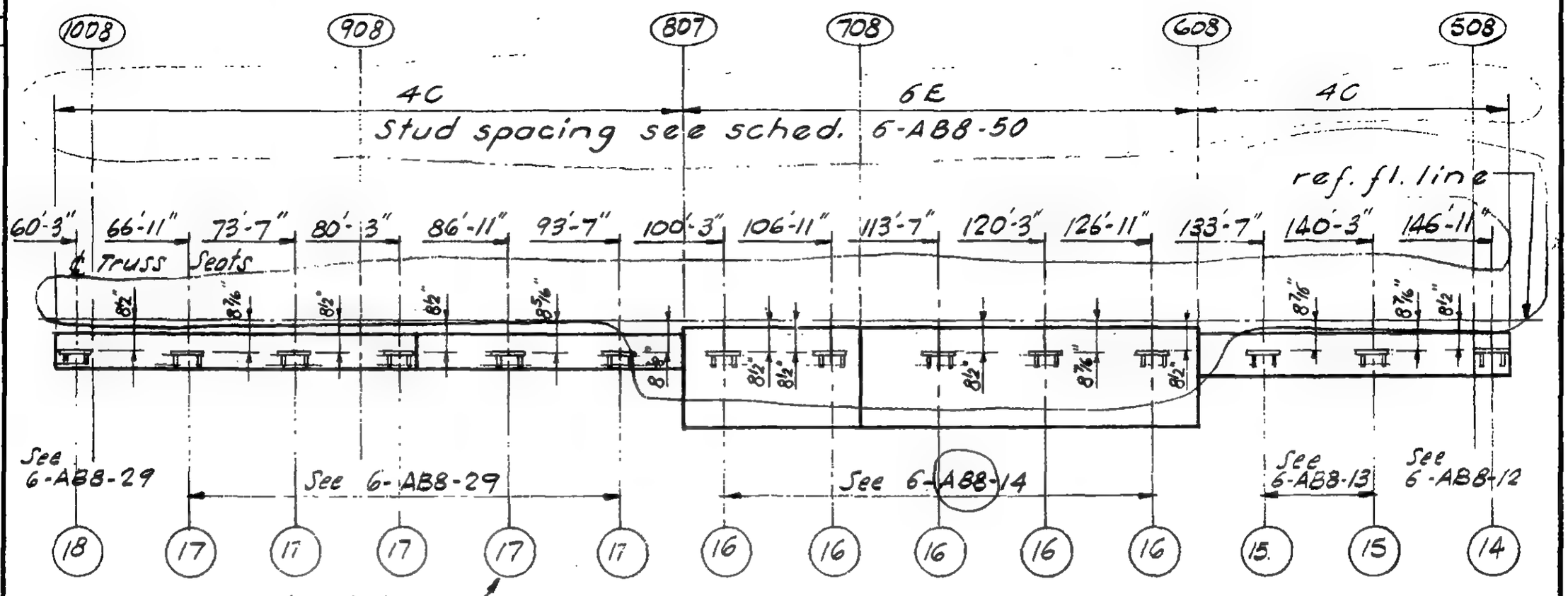

Truss seat detail no.

LICENSED PROFESSIONAL ENGINEER
LESLIE E. ROBERTSON
No. 34360
UNIVERSITY OF THE STATE OF NEW YORK

6-AB8-22

SKILLING - HELLE - CHRISTIANSEN - ROBERTSON Structural & Civil Engineers

PROJECT THE WORLD TRADE CENTER | TITLE CORE PERIMETER ELEVATION - FLOORS 45-48 | DATE 9-25-67

REVISIONS

11-22-67

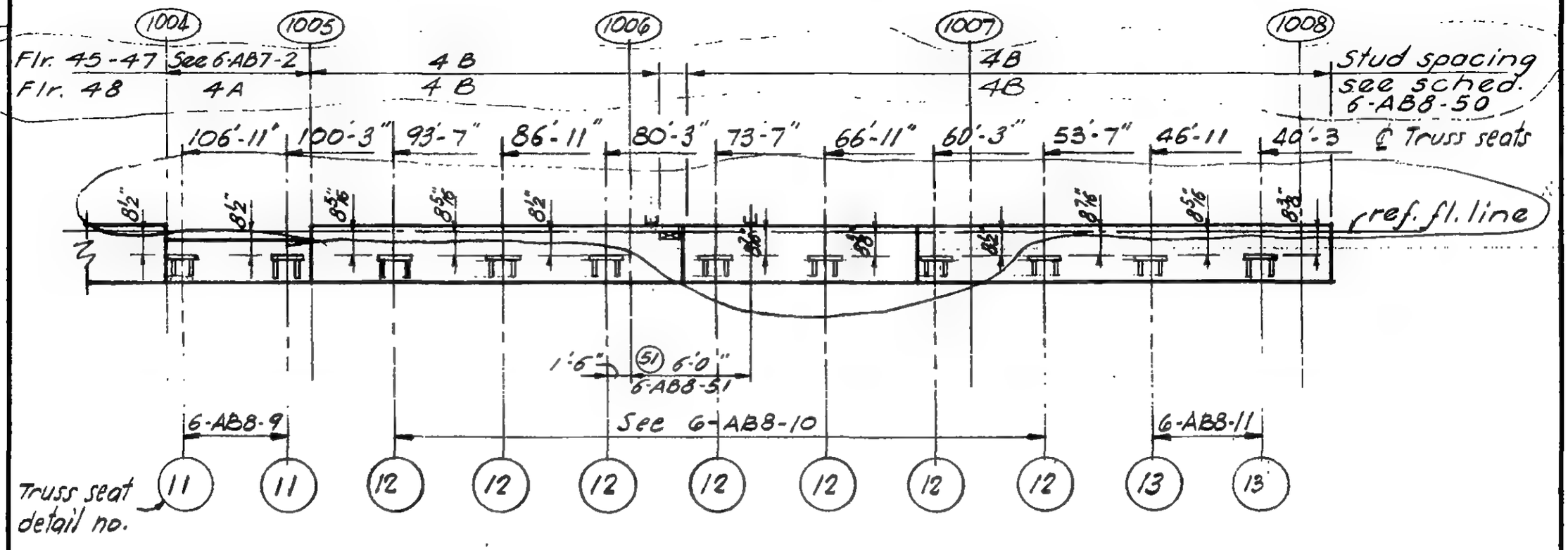

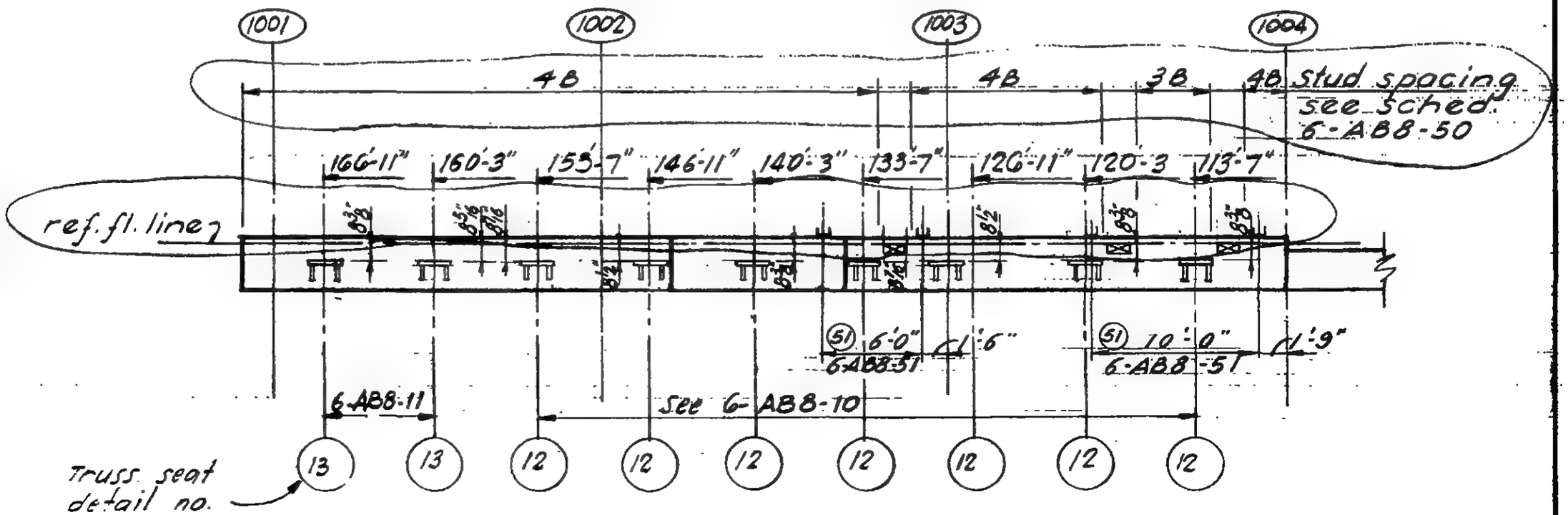

LICENSED PROFESSIONAL ENGINEER
LESLIE E. ROBERTSON
No. 34360
UNIVERSITY OF THE STATE OF NEW YORK

6-AB8-23

SKILLING - HELLE - CHRISTIANSEN - ROBERTSON — Structural & Civil Engineers

PROJECT THE WORLD TRADE CENTER | TITLE CORE PERIMETER ELEVATION - FLOORS 49-74, 79-106 | DATE 9-25-67

REVISIONS
11-22-67

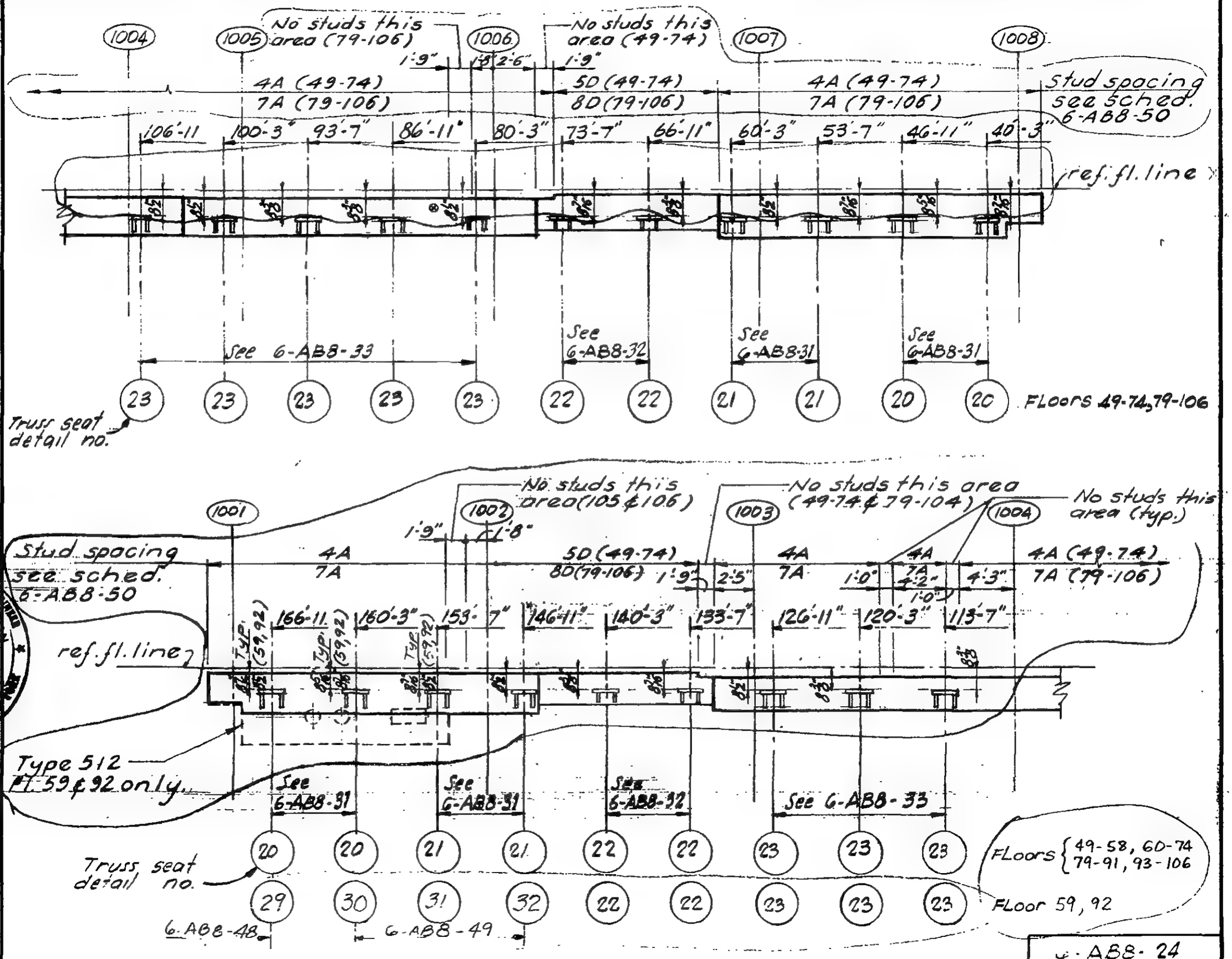

LICENSED PROFESSIONAL ENGINEER LESLIE E. ROBERTSON No. 34990 STATE OF NEW YORK

6-AB8-24

SKILLING - HELLE - CHRISTIANSEN - ROBERTSON Structural & Civil Engineers

PROJECT --- THE WORLD TRADE CENTER | TITLE CORE PERIMETER ELEVATION FLOORS 45, 46, 48, 49 | DATE 9-25-67

REVISIONS

11-22-67

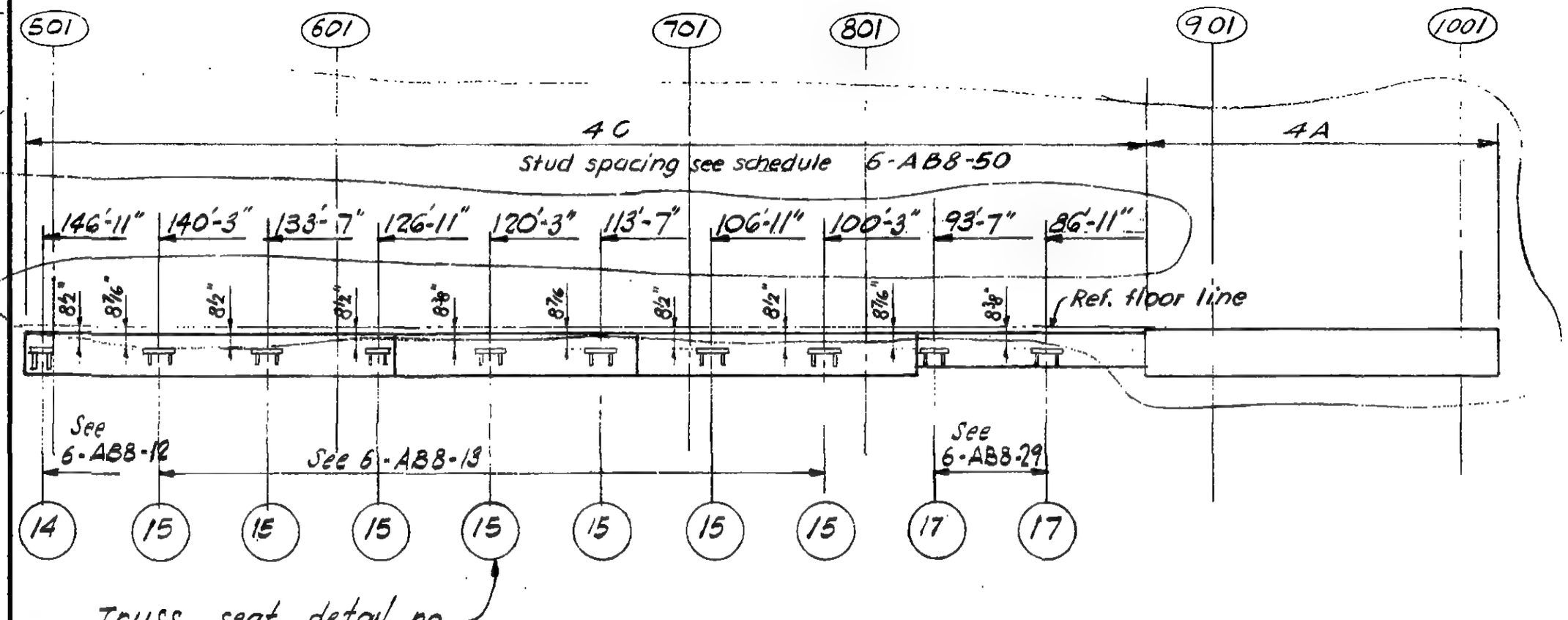

LICENSED PROFESSIONAL ENGINEER LESLIE E. ROBERTSON No. 34360 UNIVERSITY OF THE STATE OF NEW YORK

6-AB8-25

SKILLING - HELLE - CHRISTIANSEN - ROBERTSON Structural & Civil Engineers

PROJECT THE WORLD TRADE CENTER | TITLE CORE PERIMETER ELEVATION FLOORS 47 | DATE 9-25-67

REVISIONS

11-22-67

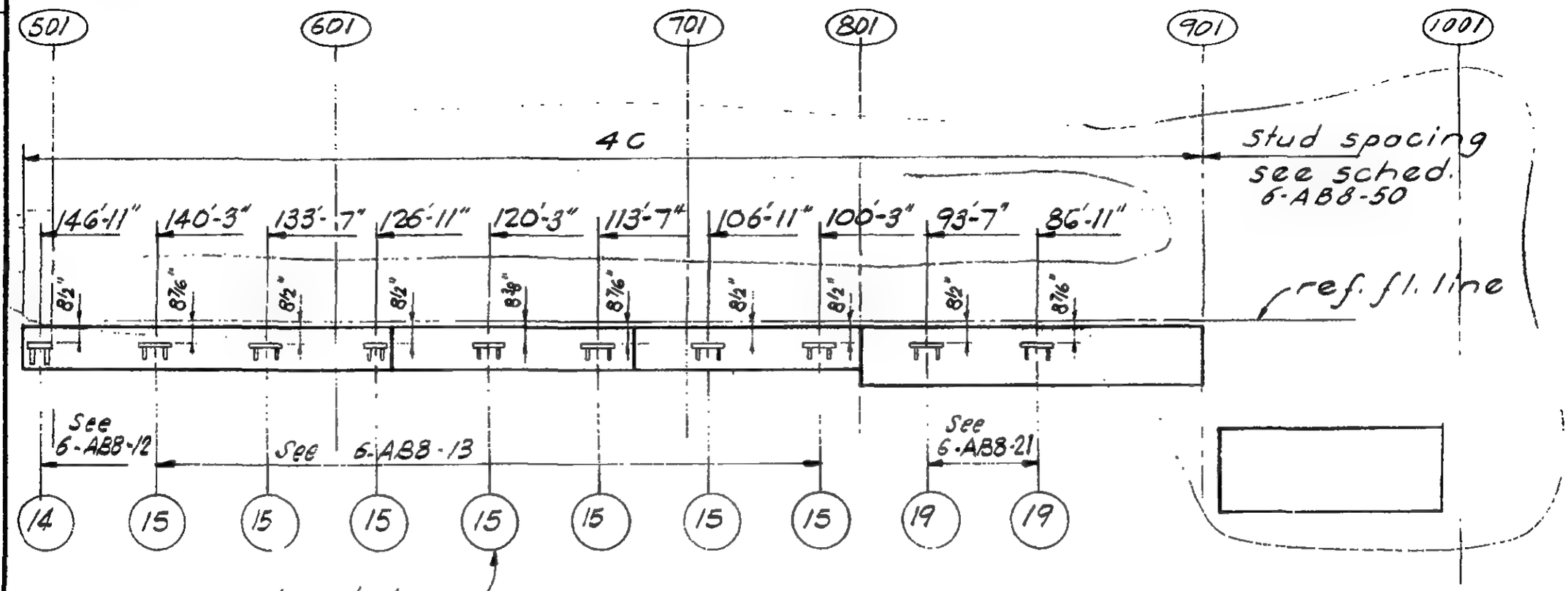

LICENSED PROFESSIONAL ENGINEER LESLIE E. ROBERTSON No. 34900 UNIVERSITY OF THE STATE OF NEW YORK

6-AB8-26

SKILLING - HELLE - CHRISTIANSEN - ROBERTSON Structural & Civil Engineers

PROJECT THE WORLD TRADE CENTER | TITLE CORE PERIMETER ELEVATION FLOORS 50-68, 70-74 | DATE 9-25-67

REVISIONS

11-22-67

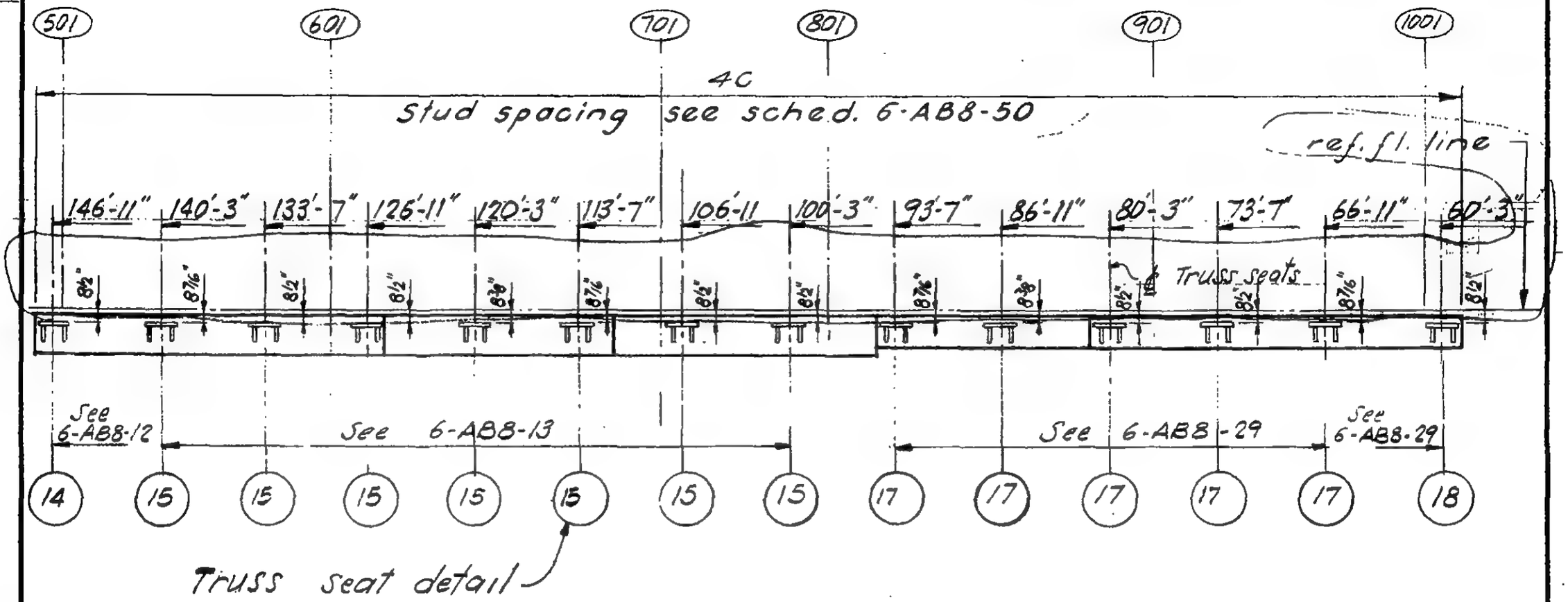

Truss seat detail

LICENSED PROFESSIONAL ENGINEER
LESLIE E. ROBERTSON
No. 34360
UNIVERSITY OF THE STATE OF NEW YORK

6-AB8-27

SKILLING - HELLE - CHRISTIANSEN - ROBERTSON Structural & Civil Engineers

PROJECT THE WORLD TRADE CENTER | TITLE CORE PERIMETER ELEVATION - FLOOR 69 | DATE 9-25-67

REVISIONS

11-22-67

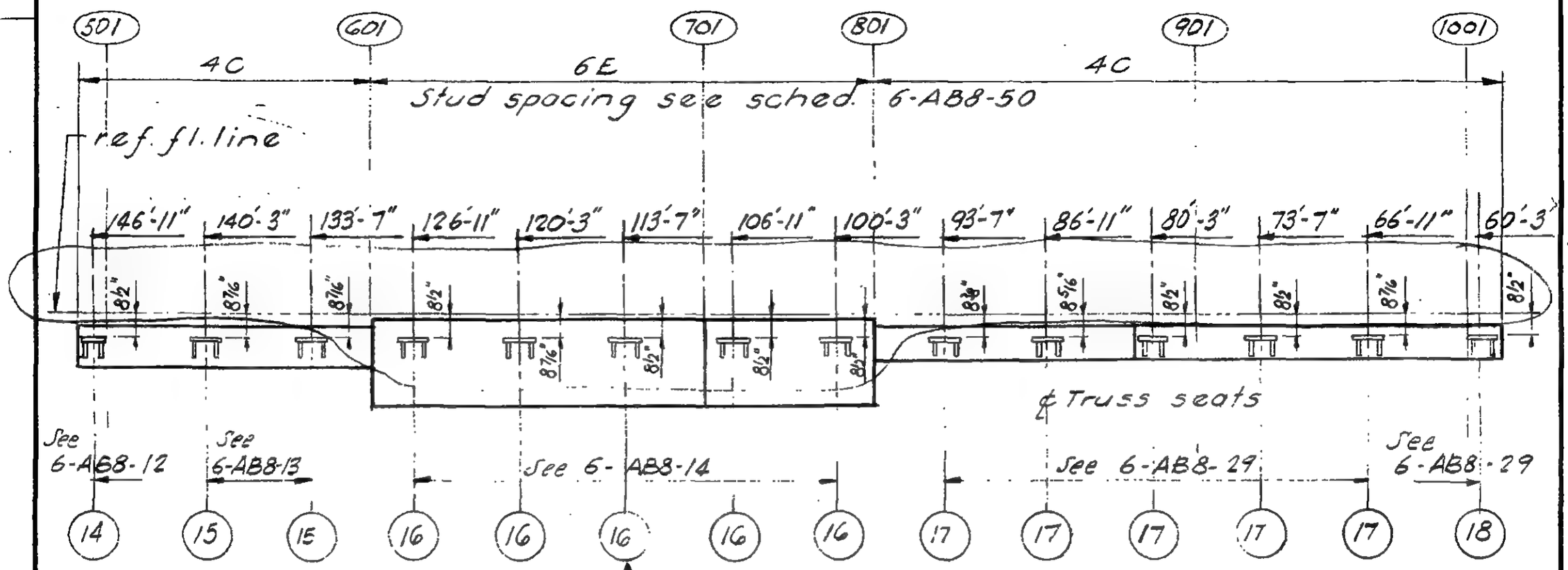

LICENSED PROFESSIONAL ENGINEER
LESLIE E. ROBERTSON
No. 34360
UNIVERSITY OF THE STATE OF NEW YORK

6-AB8-28

SKILLING - HELLE - CHRISTIANSEN - ROBERTSON Structural & Civil Engineers

PROJECT THE WORLD TRADE CENTER | TITLE TRUSS SEAT DETAIL 17 & 18 | DATE 9-25-67

REVISIONS

11-22-67

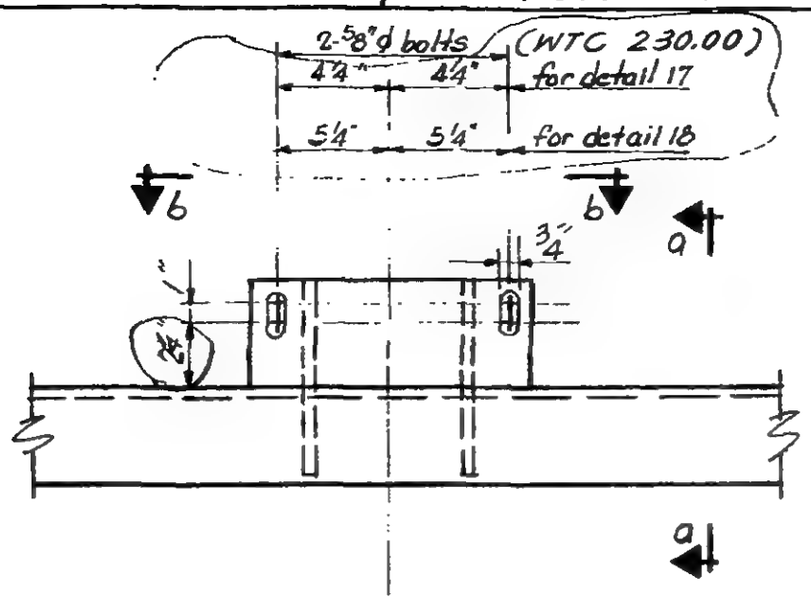

PLAN

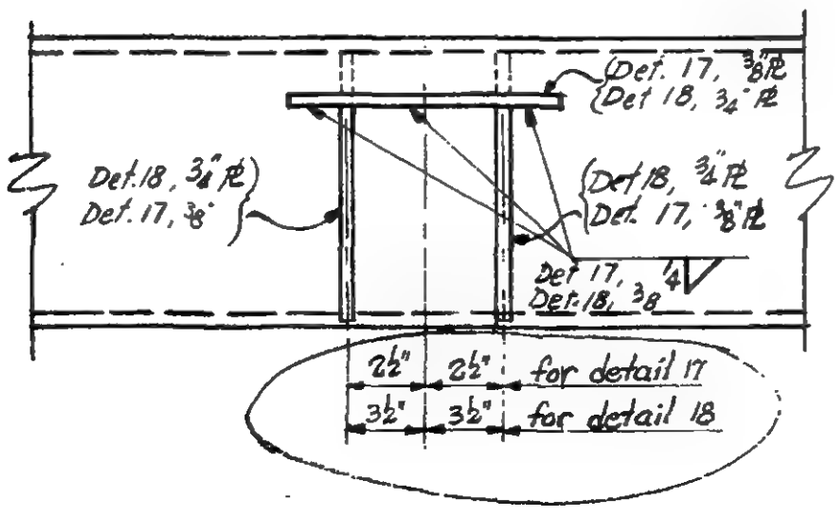

Section b-b

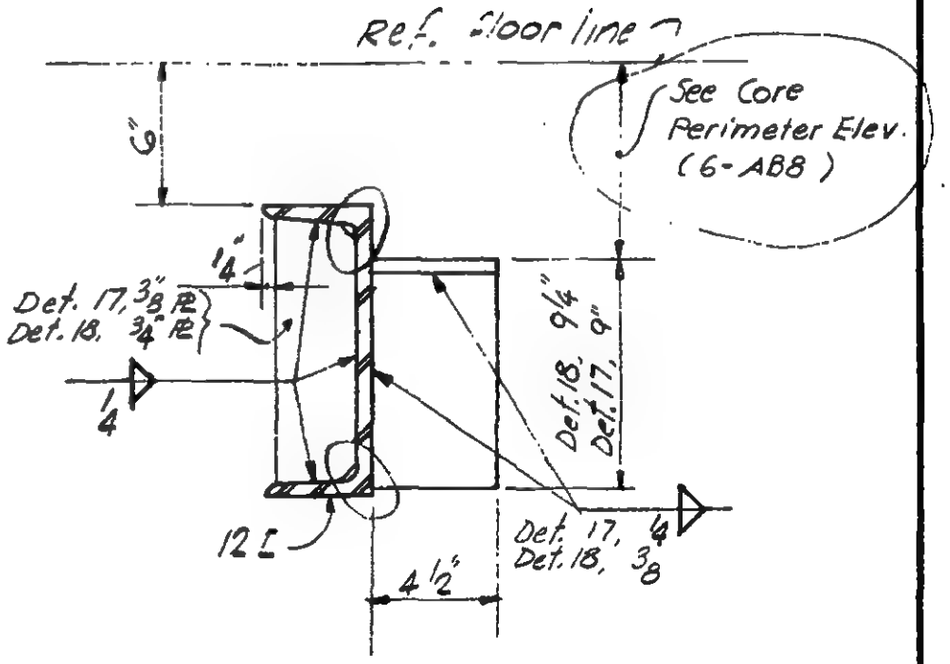

Section a-a

LICENSED PROFESSIONAL ENGINEER
LESLIE E. ROBERTSON
No. 34360
UNIVERSITY OF THE STATE OF NEW YORK

SKILLING - HELLE - CHRISTIANSEN - ROBERTSON Structural & Civil Engineers

PROJECT THE WORLD TRADE CENTER | TITLE TRUSS SEAT DETAIL 19 | DATE 9-25-67

REVISIONS

11-22-67

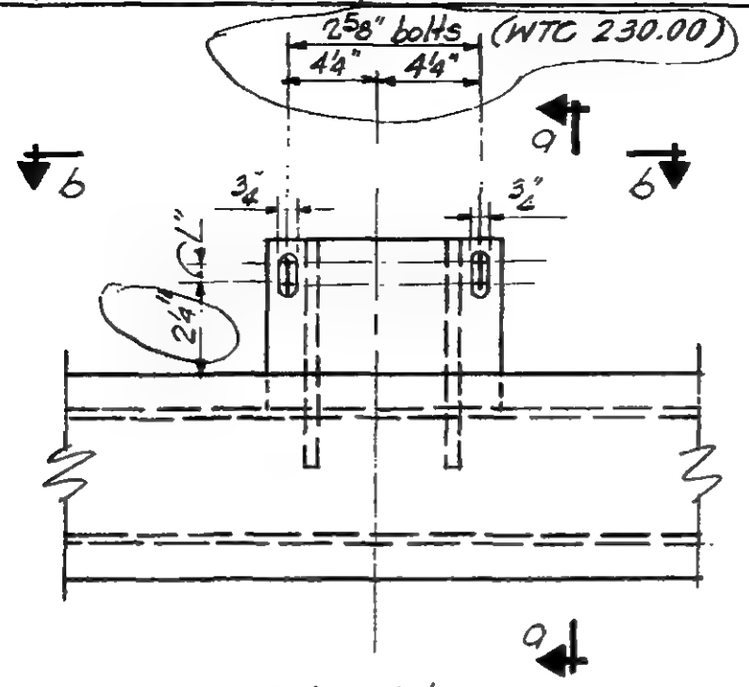

PLAN

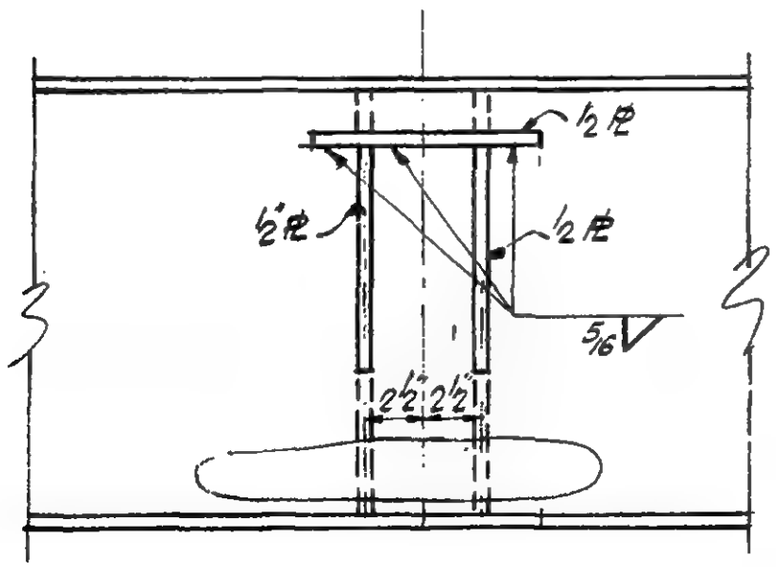

Section b-b

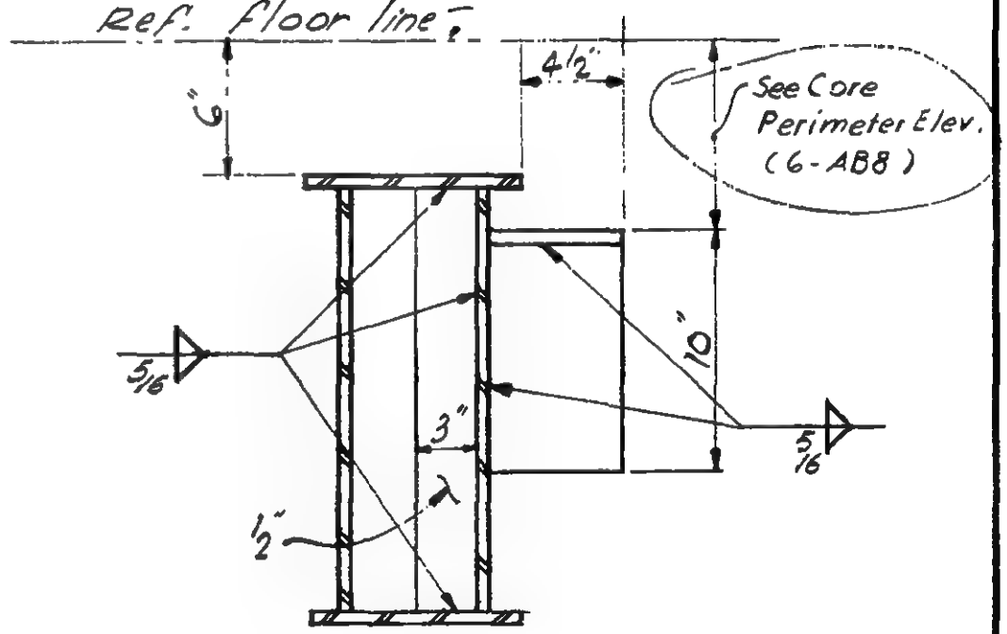

Section a-a

LESLIE E. ROBERTSON
No. 24260

SKILLING - HELLE - CHRISTIANSEN - ROBERTSON Structural & Civil Engineers

PROJECT THE WORLD TRADE CENTER | TITLE TRUSS SEAT DETAIL 20 & 21 | DATE 9-25-67

REVISIONS
11-22-67

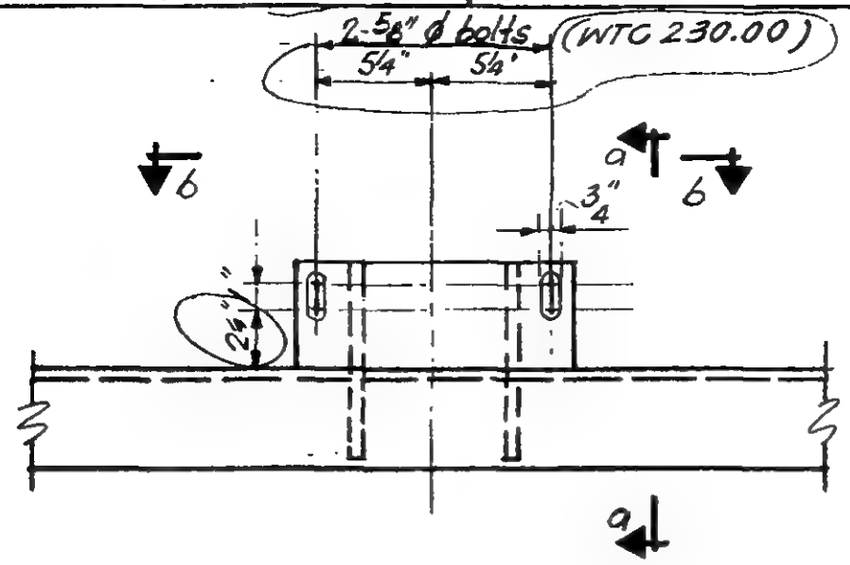

PLAN

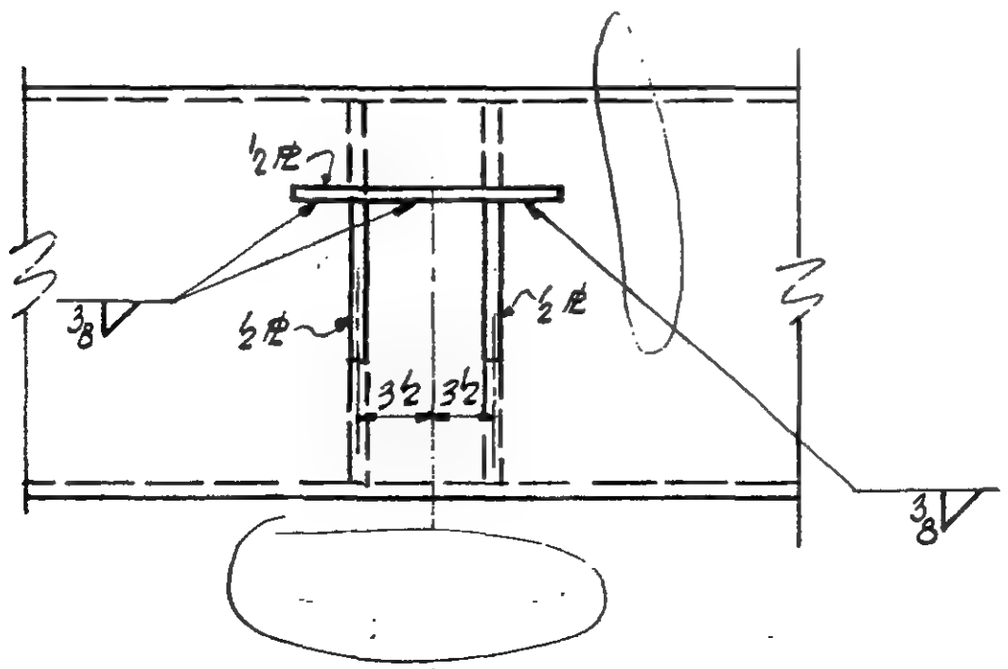

Section b-b

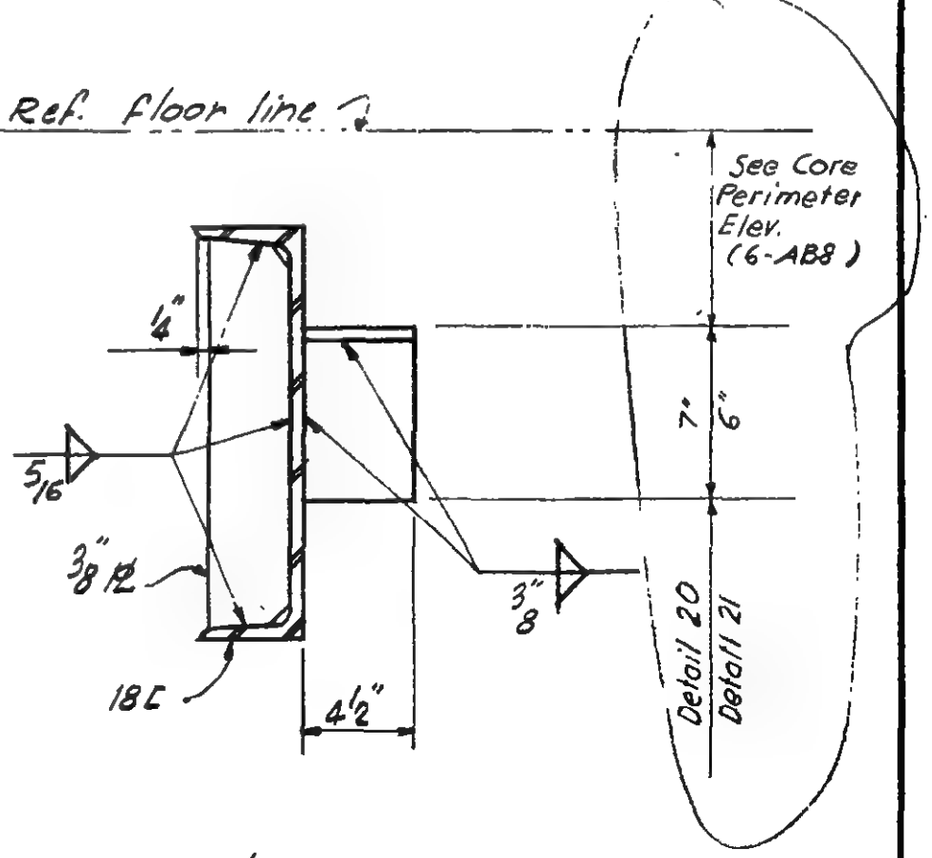

Section a-a

LICENSED PROFESSIONAL ENGINEER
LESLIE E. ROBERTSON
No. 34360
UNIVERSITY OF THE STATE OF NEW YORK

6-AB8-31

SKILLING - HELLE - CHRISTIANSEN - ROBERTSON Structural & Civil Engineers

PROJECT THE WORLD TRADE CENTER | TITLE TRUSS SEAT DETAIL 22 | DATE 9-25-67

REVISIONS

11-22-67

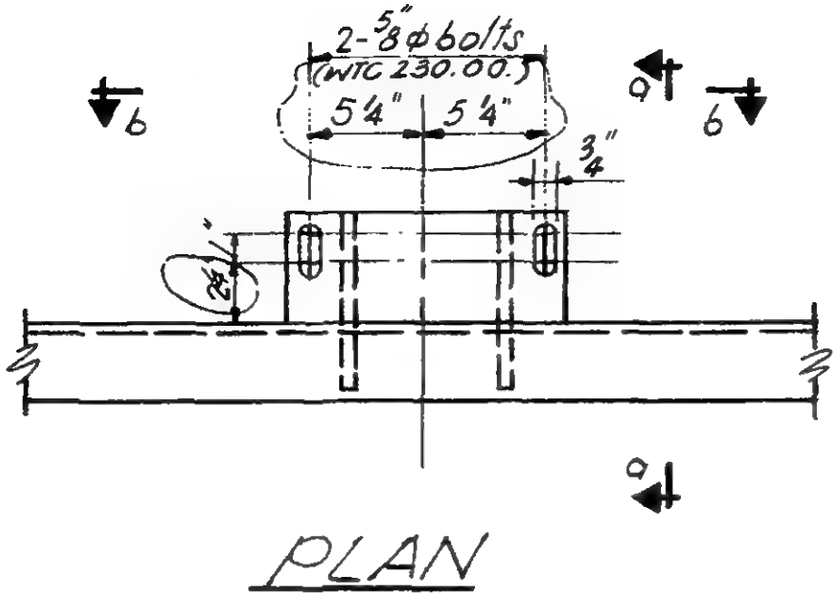

PLAN

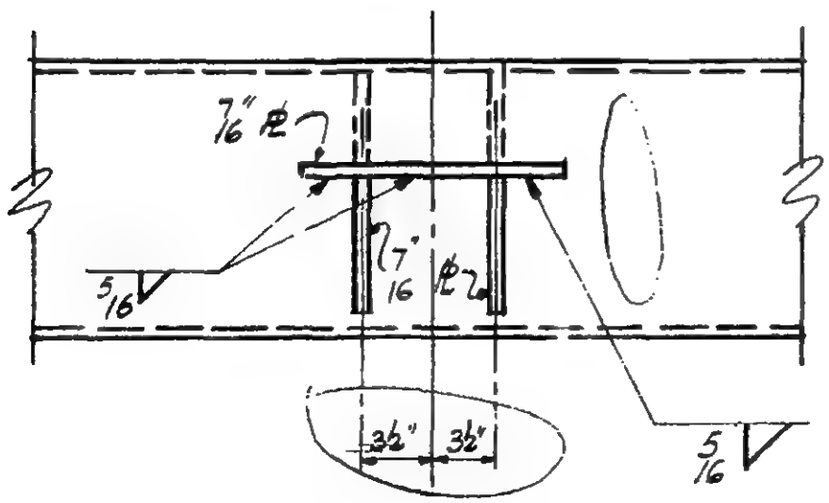

Section b-b

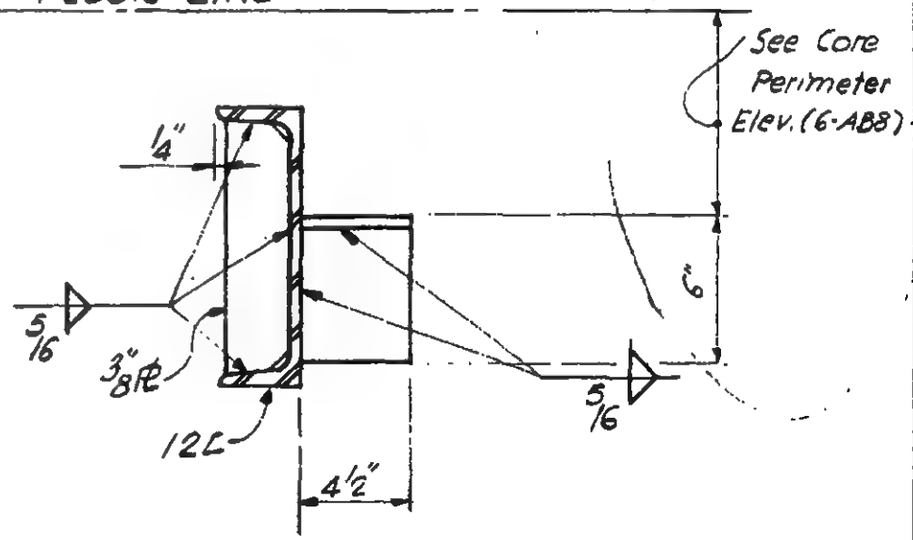

Section a-a

6-AB8-32

LICENSED PROFESSIONAL ENGINEER
LESLIE E. ROBERTSON
No. 34360
UNIVERSITY OF THE STATE OF NEW YORK

SKILLING - HELLE - CHRISTIANSEN - ROBERTSON Structural & Civil Engineers

PROJECT THE WORLD TRADE CENTER | TITLE TRUSS SEAT DETAIL 23 | DATE 9-25-67

REVISIONS

11-22-67

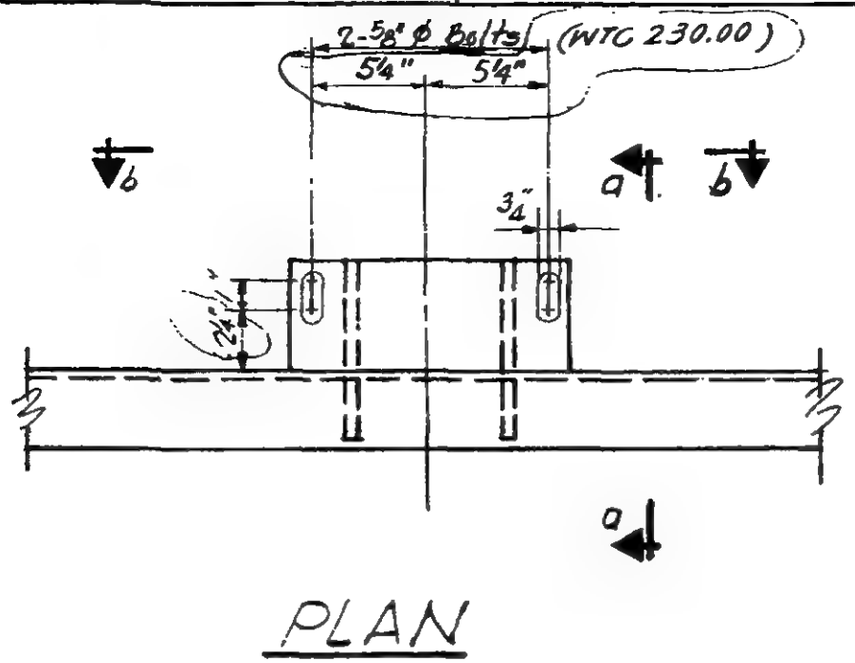

PLAN

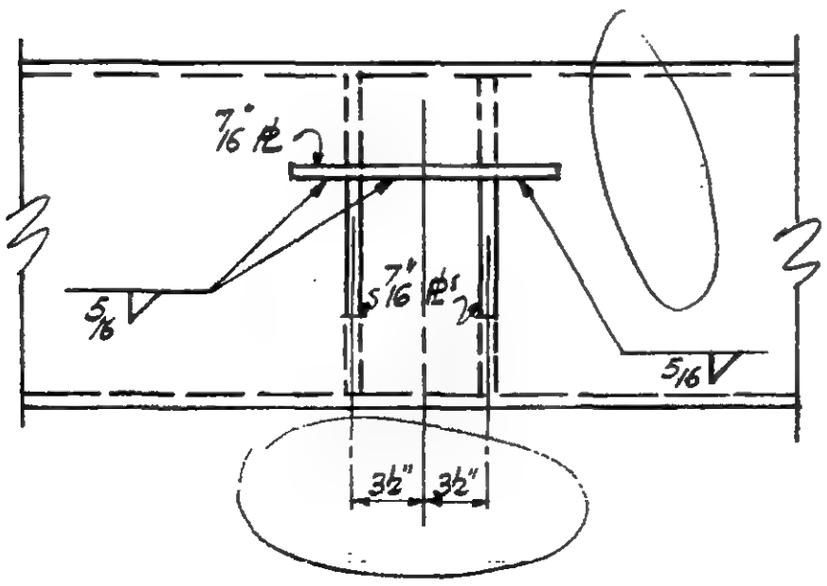

Section b-b

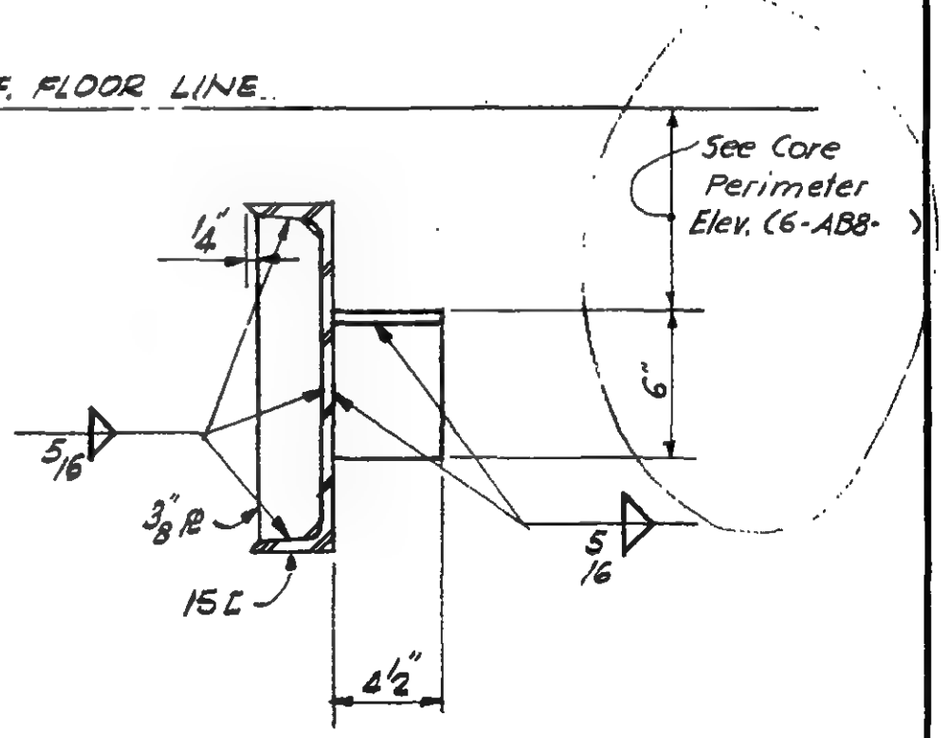

Section a-a

LICENSED PROFESSIONAL ENGINEER
LESLIE E. ROBERTSON
No. 34360
UNIVERSITY OF THE STATE OF NEW YORK

SKILLING - HELLE - CHRISTIANSEN - ROBERTSON Structural & Civil Engineers

PROJECT THE WORLD TRADE CENTER | TITLE CORE PERIMETER ELEVATION - FLOOR 78 | DATE 11-22-67

REVISIONS

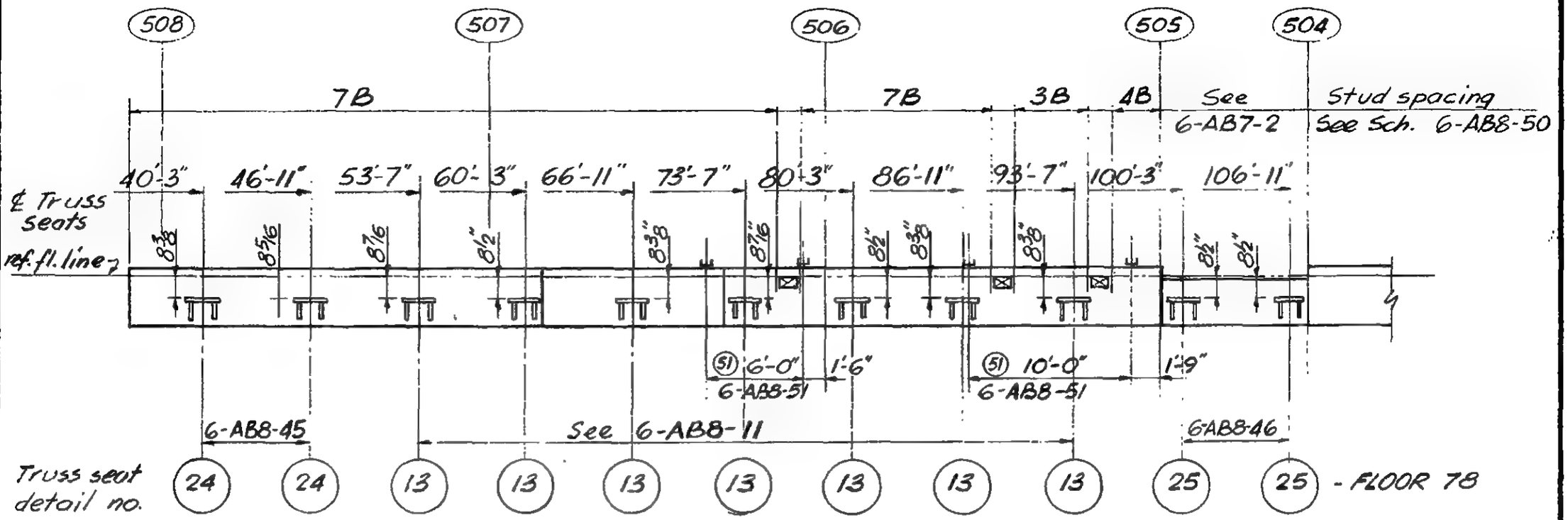

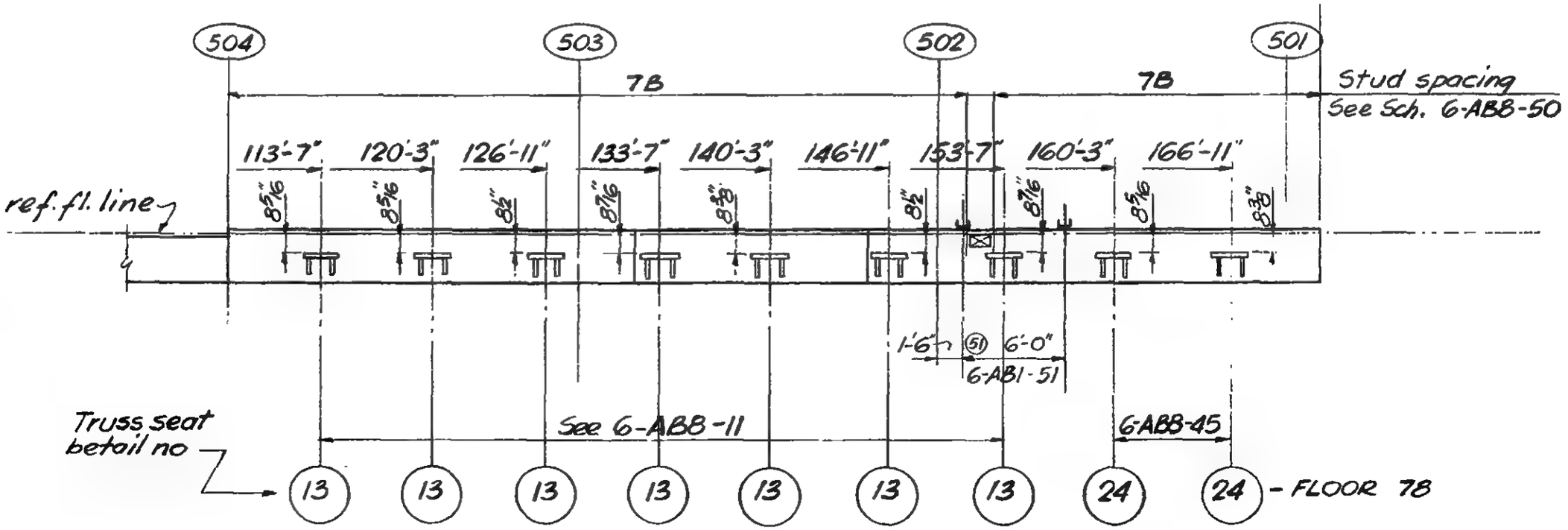

LICENSED PROFESSIONAL ENGINEER
LESLIE E. ROBERTSON
NO. 34360
STATE OF NEW YORK

6-AB8-34

SKILLING - HELLE - CHRISTIANSEN - ROBERTSON — Structural & Civil Engineers

PROJECT: THE WORLD TRADE CENTER | TITLE: CORE PERIMETER ELEVATION - FLOORS 83-106 | DATE: 11-22-67

REVISIONS

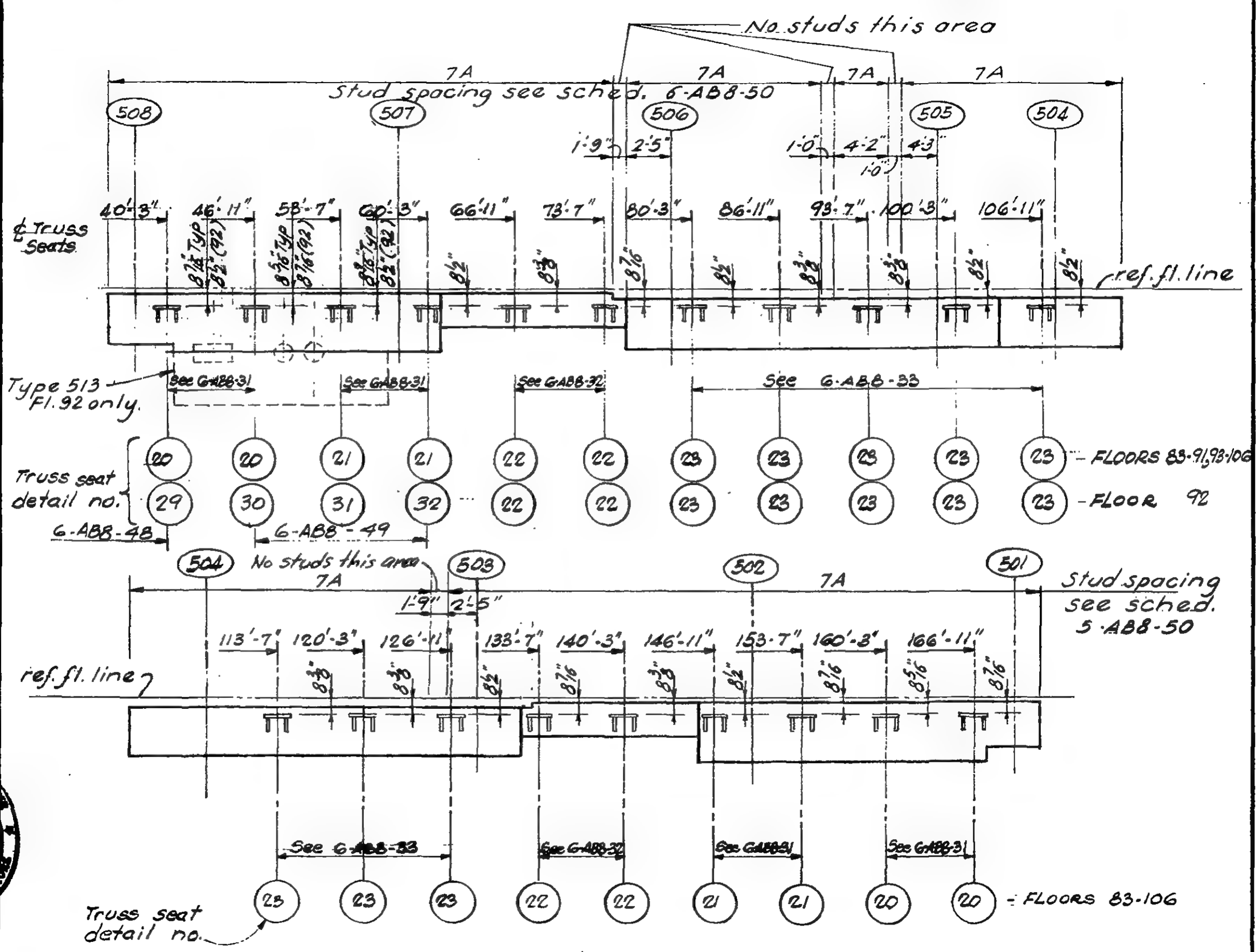

LICENSED PROFESSIONAL ENGINEER
LESLIE E. ROBERTSON
No. 34360
UNIVERSITY OF THE STATE OF NEW YORK

G-ABB-35

SKILLING - HELLE - CHRISTIANSEN - ROBERTSON Structural & Civil Engineers

PROJECT THE WORLD TRADE CENTER | TITLE CORE PERIMETER ELEVATION FLOORS 79,80,82,83 | DATE 11-22-67

REVISIONS

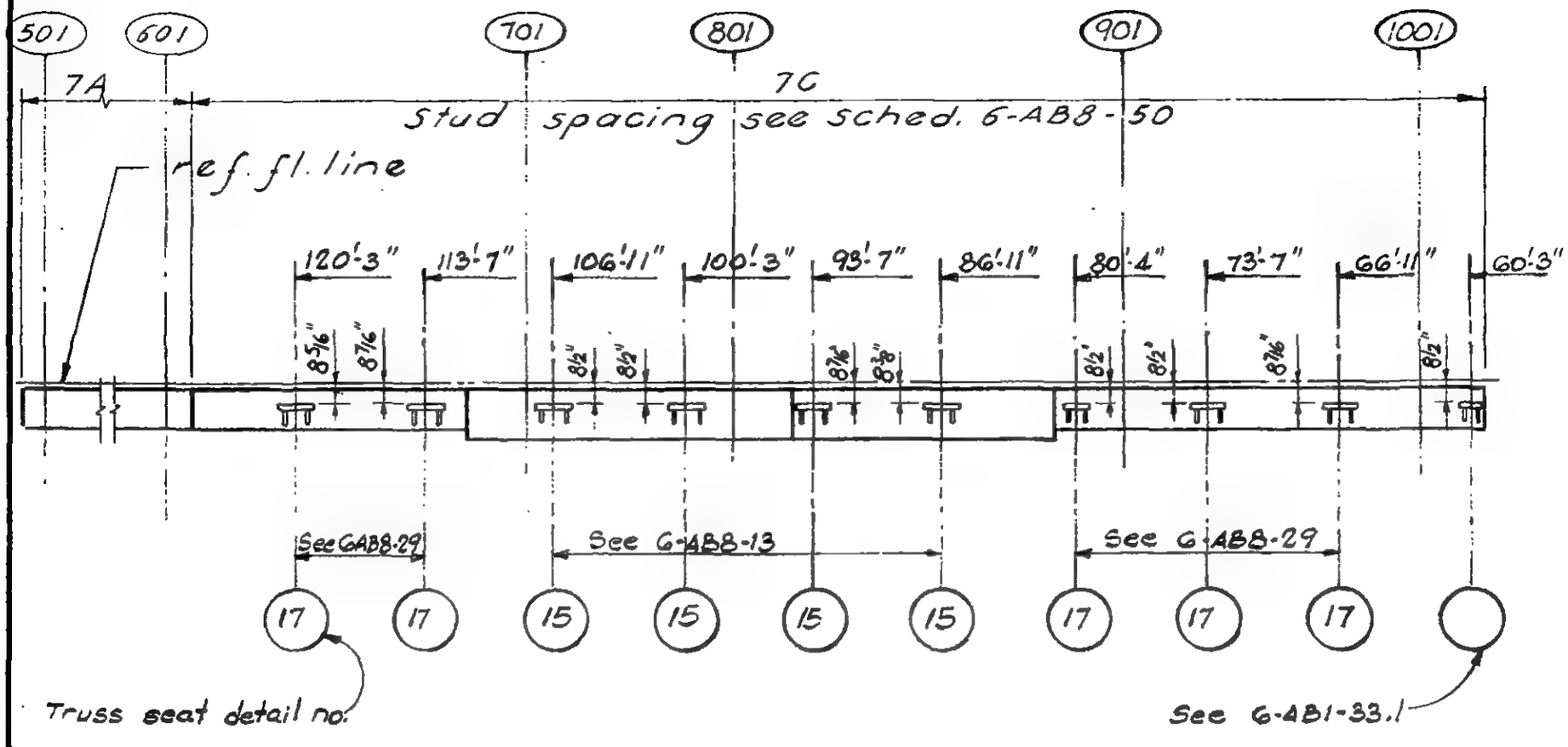

LICENSED PROFESSIONAL ENGINEER
LESLIE E. ROBERTSON
No. 34360
UNIVERSITY OF THE STATE OF NEW YORK

G-ABB-36

SKILLING - HELLE - CHRISTIANSEN - ROBERTSON Structural & Civil Engineers

PROJECT THE WORLD TRADE CENTER | TITLE CORE PERIMETER ELEVATION FLOORS 81 | DATE 11-22-67

REVISIONS

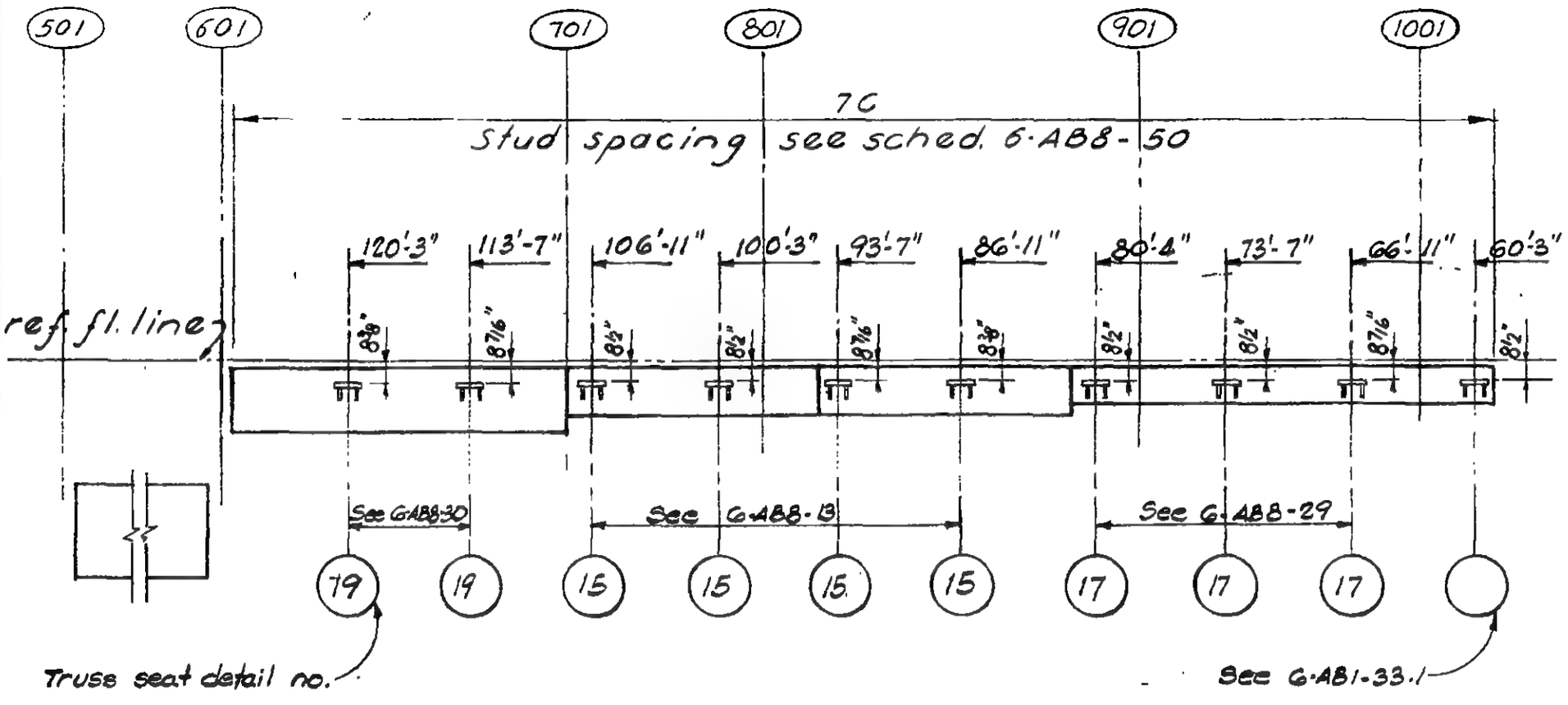

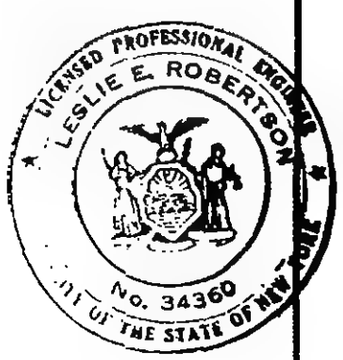

G-AB8-37

SKILLING - HELLE - CHRISTIANSEN - ROBERTSON Structural & Civil Engineers

PROJECT THE WORLD TRADE CENTER | TITLE CORE PERIMETER ELEVATION FLOORS 84-94, 96-106 | DATE 11-22-67

REVISIONS

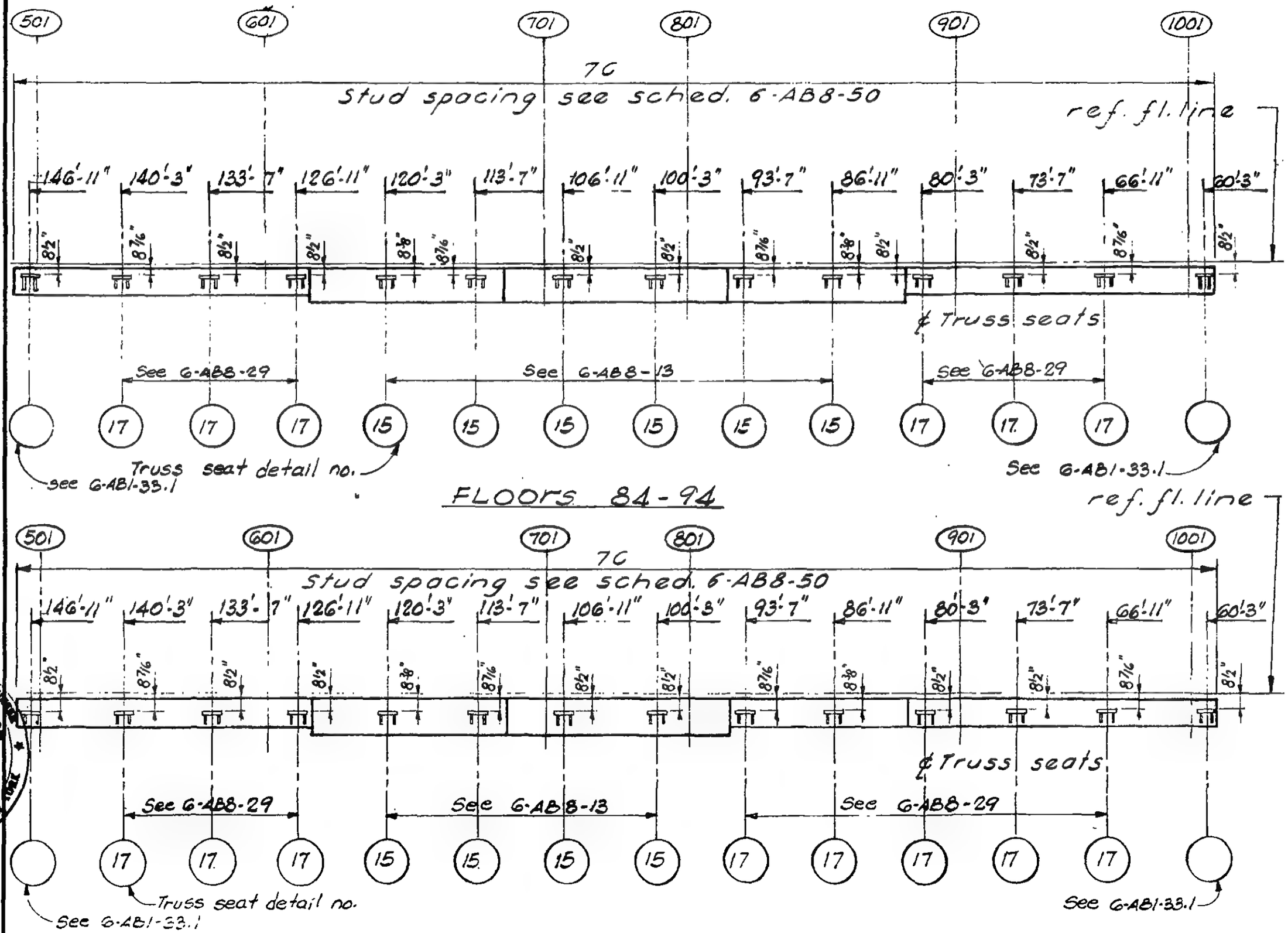

LICENSED PROFESSIONAL ENGINEER LESLIE E. ROBERTSON No. 34360 UNIVERSITY OF THE STATE OF NEW YORK

G-AB8-38

SKILLING - HELLE - CHRISTIANSEN - ROBERTSON Structural & Civil Engineers

PROJECT THE WORLD TRADE CENTER | TITLE CORE PERIMETER ELEVATION - FLOOR 95 | DATE 11-22-67

REVISIONS

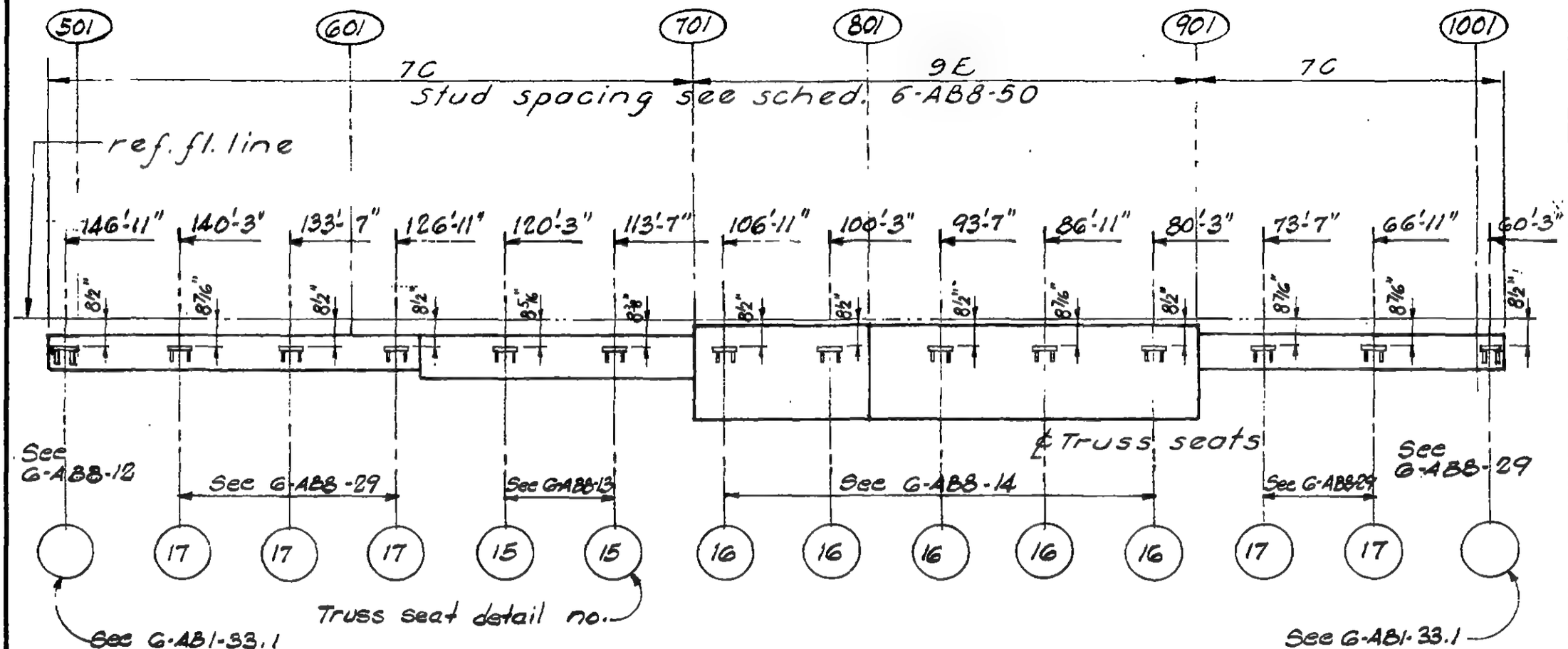

G-ABB-39

SKILLING - HELLE - CHRISTIANSEN - ROBERTSON Structural & Civil Engineers

PROJECT THE WORLD TRADE CENTER | TITLE CORE PERIMETER ELEVATION - FLOORS 80, 82, 83 | DATE 11-22-67

REVISIONS

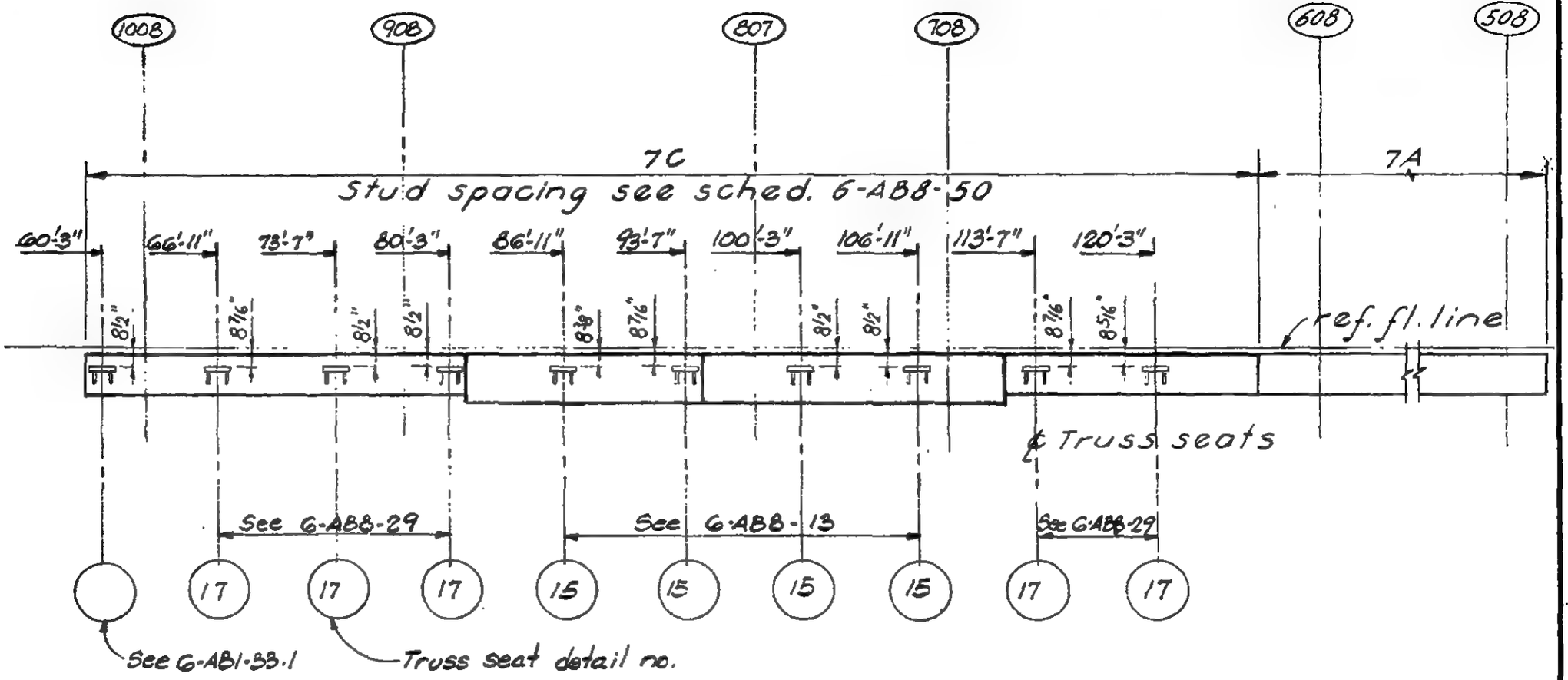

G-AB8-40

SKILLING - HELLE - CHRISTIANSEN - ROBERTSON Structural & Civil Engineers

PROJECT THE WORLD TRADE CENTER | TITLE CORE PERIMETER ELEVATION - FLOOR 81 | DATE 11-22-67

REVISIONS

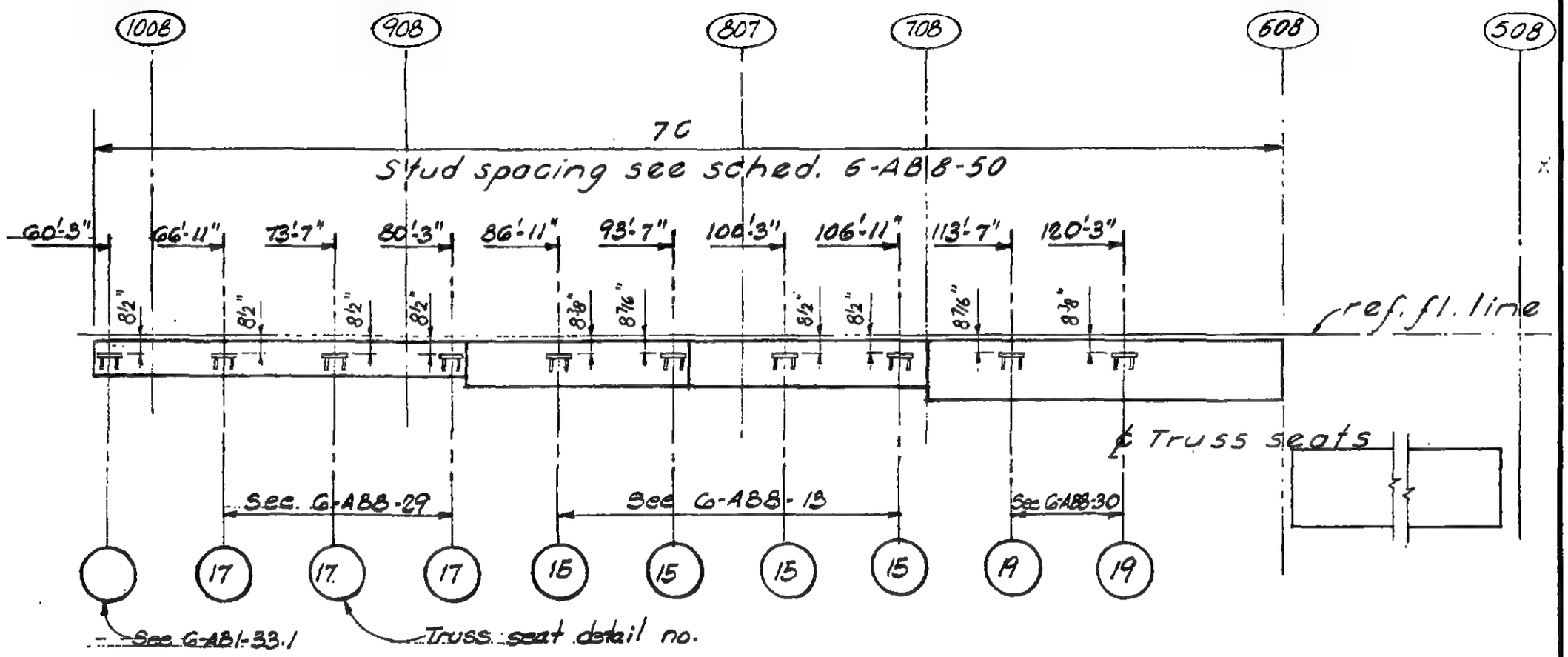

LICENSED PROFESSIONAL ENGINEER
LESLIE E. ROBERTSON
No. 34360
OF THE STATE OF NEW YORK

6-AB8-41

SKILLING - HELLE - CHRISTIANSEN - ROBERTSON Structural & Civil Engineers

PROJECT THE WORLD TRADE CENTER | TITLE CORE PERIMETER ELEVATION - FLOORS 84-87, 89-106 | DATE 11-22-67

REVISIONS

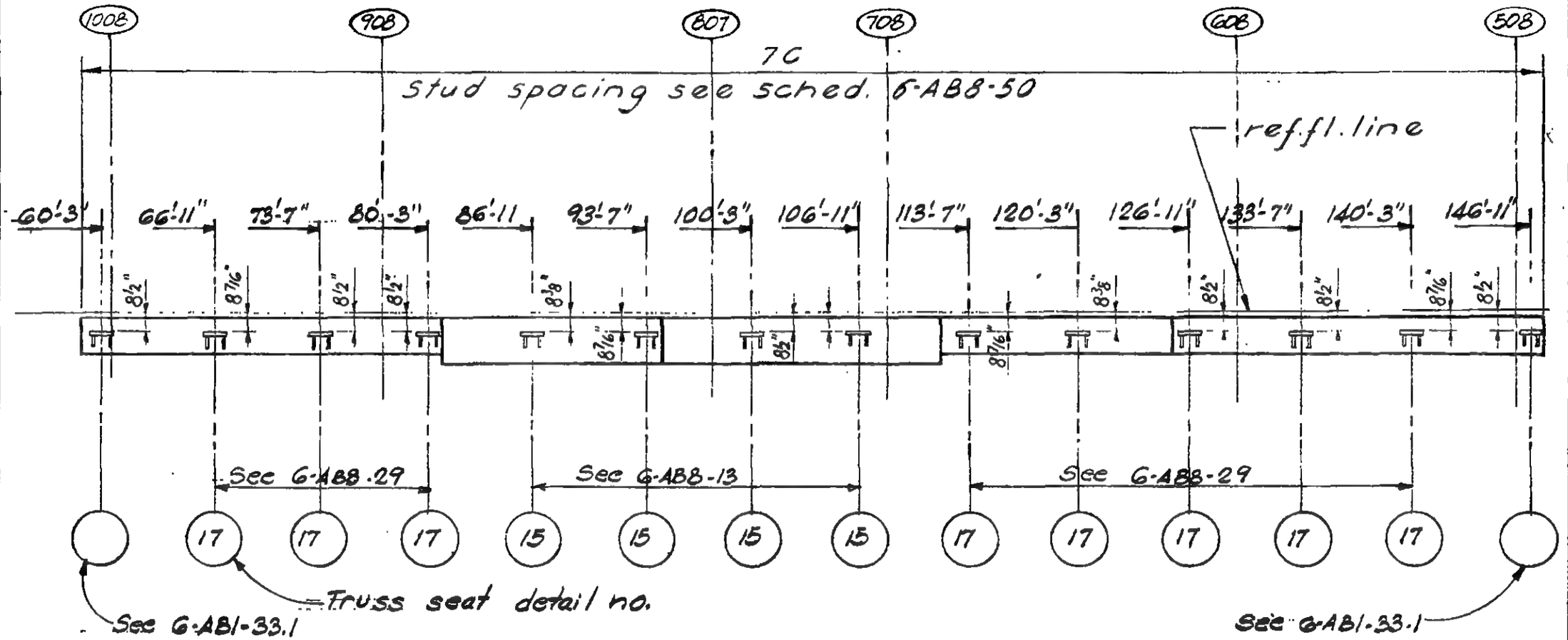

6-AB8-42

SKILLING - HELLE - CHRISTIANSEN - ROBERTSON Structural & Civil Engineers

PROJECT THE WORLD TRADE CENTER | TITLE CORE PERIMETER ELEVATION - FLOOR 88 | DATE 11-22-67

REVISIONS

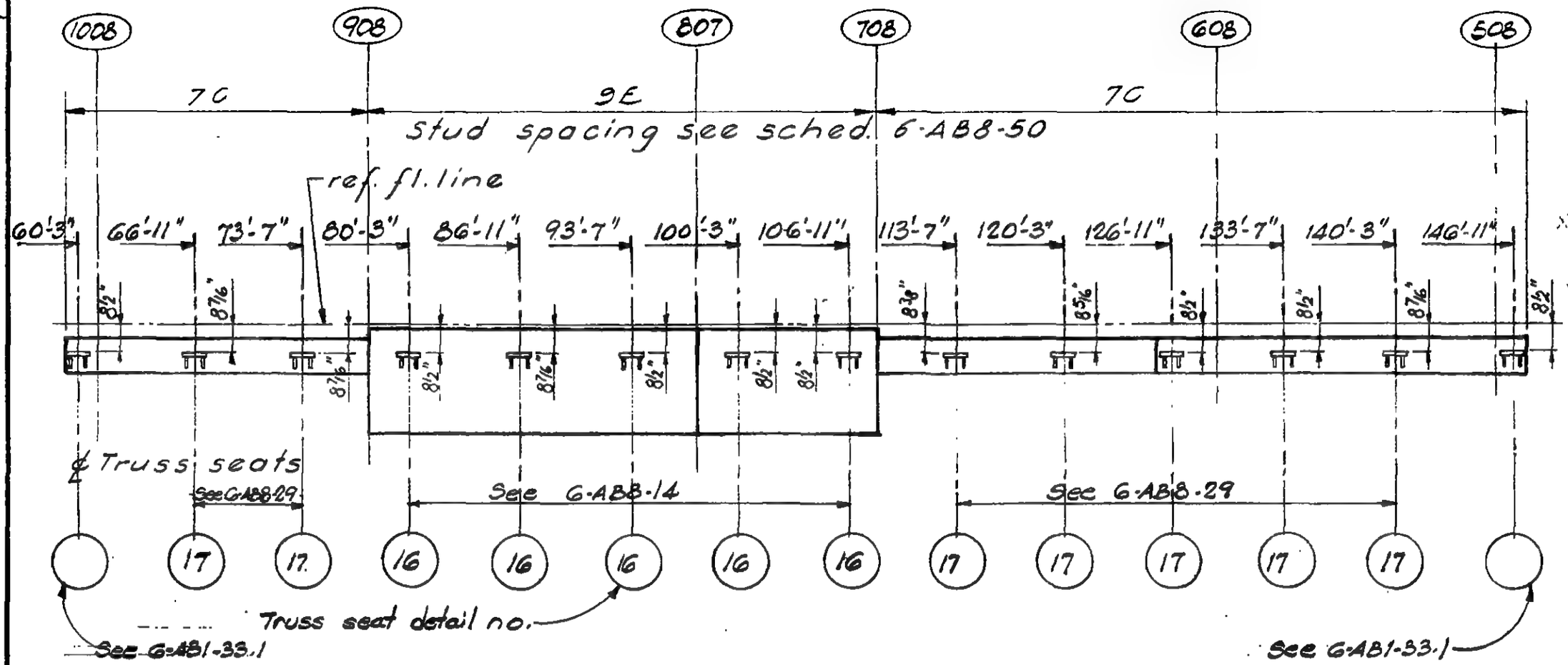

LICENSED PROFESSIONAL ENGINEER LESLIE E. ROBERTSON NO. 34560 UNIVERSITY OF THE STATE OF NEW YORK

6-AB8-43

SKILLING - HELLE - CHRISTIANSEN - ROBERTSON Structural & Civil Engineers

PROJECT THE WORLD TRADE CENTER | TITLE CORE PERIMETER ELEVATION FLOOR 44,45, 78, 79 | DATE 11-22-67

REVISIONS

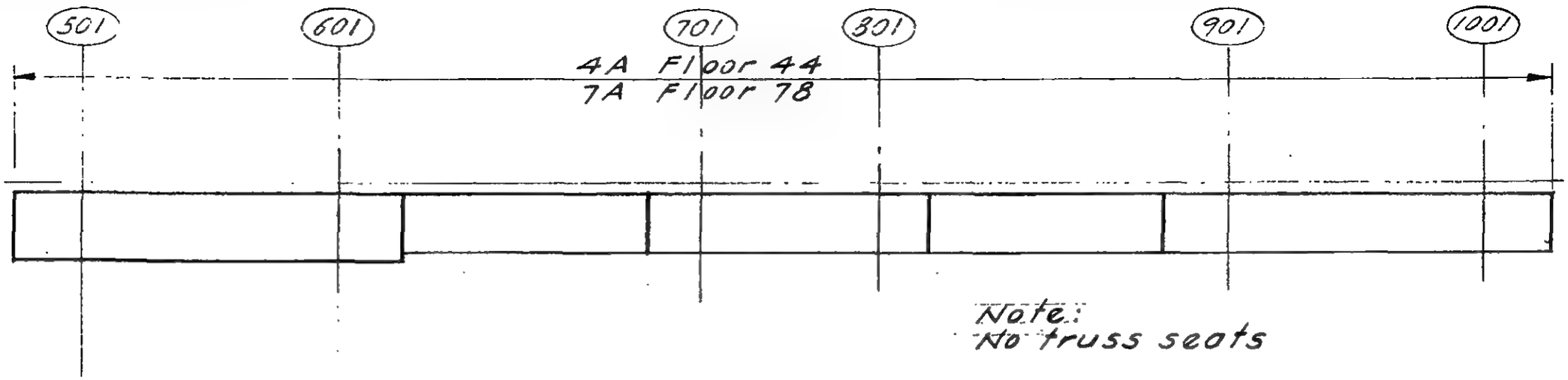

Note:
No truss seats

Floor 44 & 78

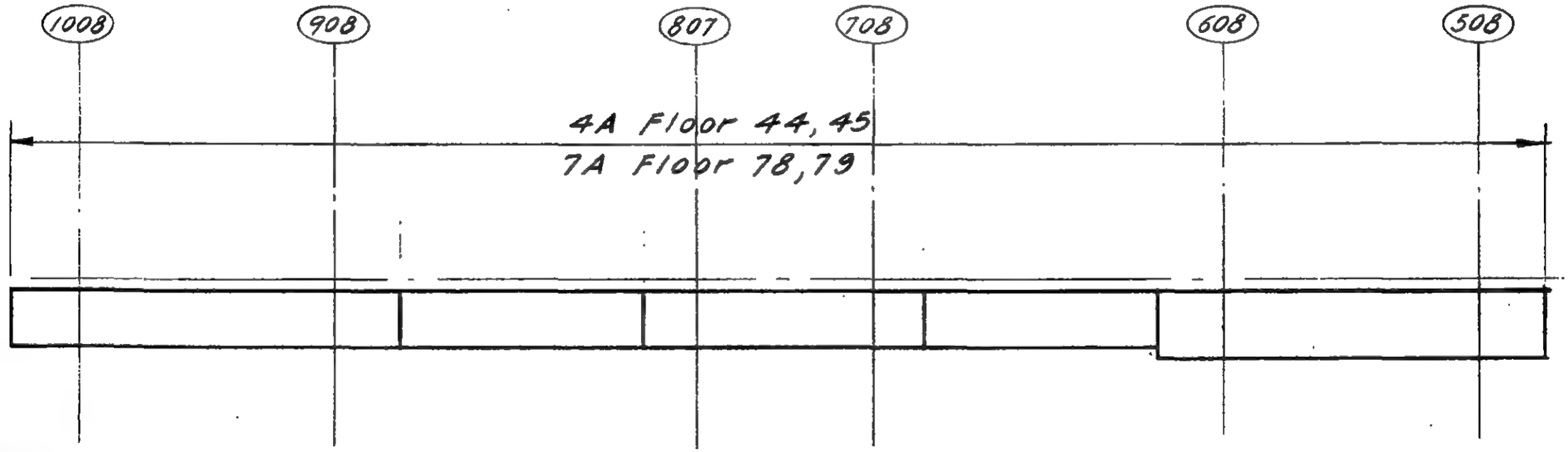

Note
No truss seats

Floor 44, 45, 78, 79

For stud spacing see sched.
6-A88-50.

LICENSED PROFESSIONAL ENGINEER
LESLIE E. ROBERTSON
No. 34360
UNIVERSITY OF THE STATE OF NEW YORK

6-A88-44

SKILLING - HELLE - CHRISTIANSEN - ROBERTSON Structural & Civil Engineers

PROJECT THE WORLD TRADE CENTER | TITLE TRUSS SEAT DETAIL 24 | DATE 11-22-67

REVISIONS

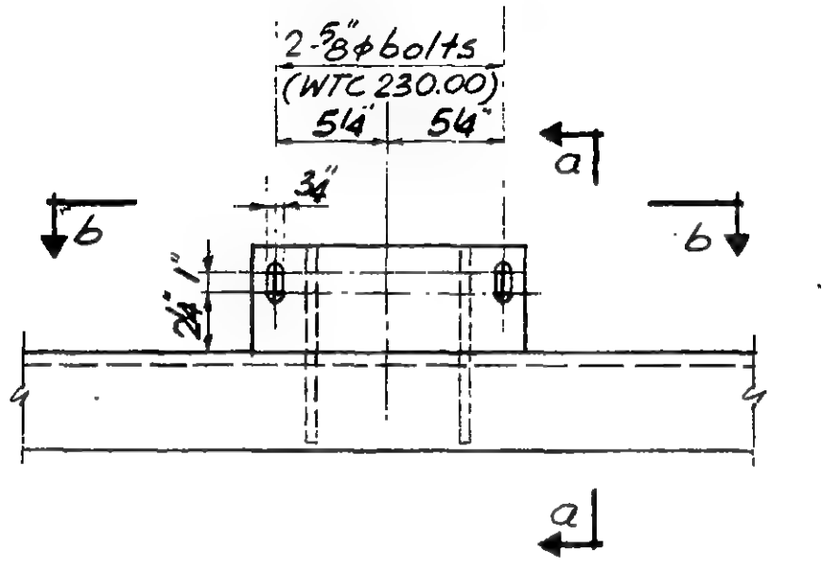

Plan

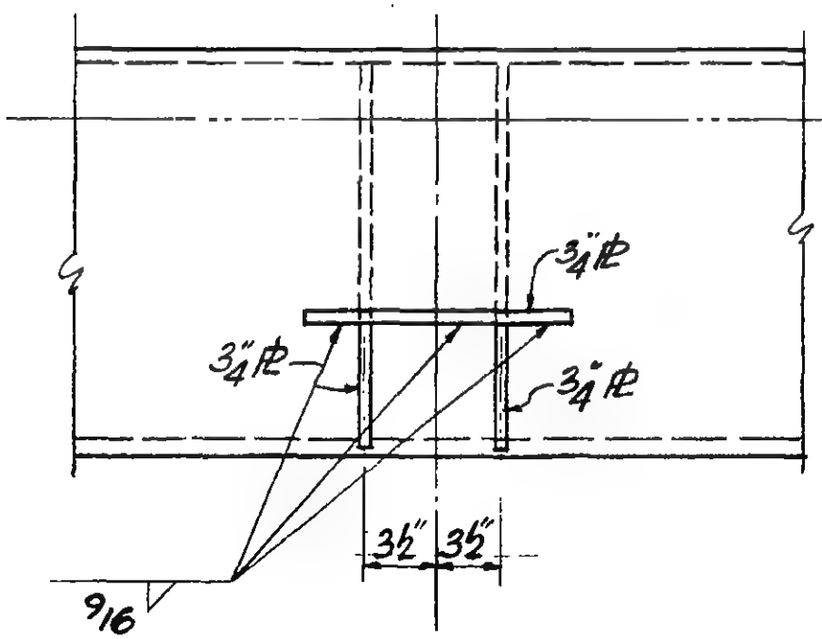

Section b-b

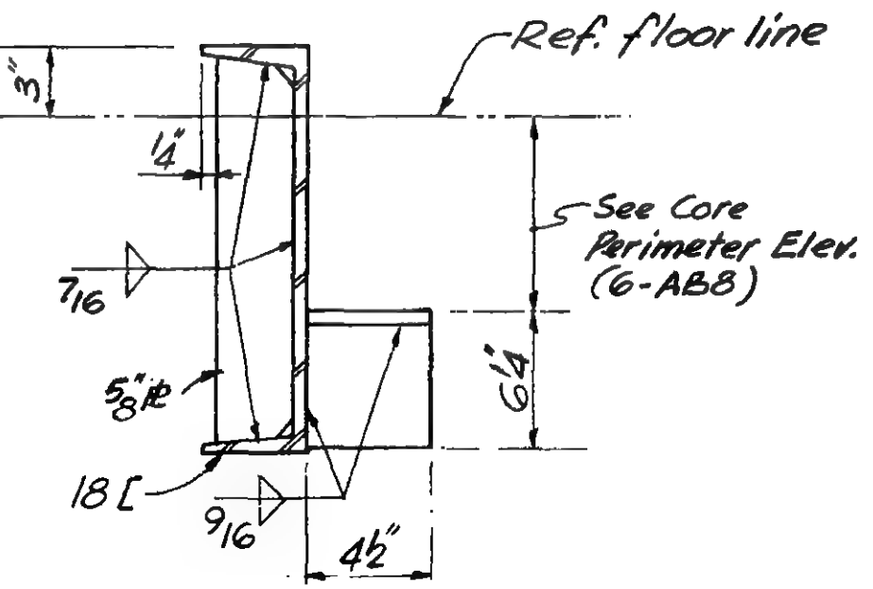

Section a-a

LICENSED PROFESSIONAL ENGINEER
LESLIE E. ROBERTSON
NEW YORK

6-AB8-45

SKILLING - HELLE - CHRISTIANSEN - ROBERTSON Structural & Civil Engineers

PROJECT THE WORLD TRADE CENTER | TITLE TRUSS SEAT DETAIL 25 | DATE 11-22-67

REVISIONS

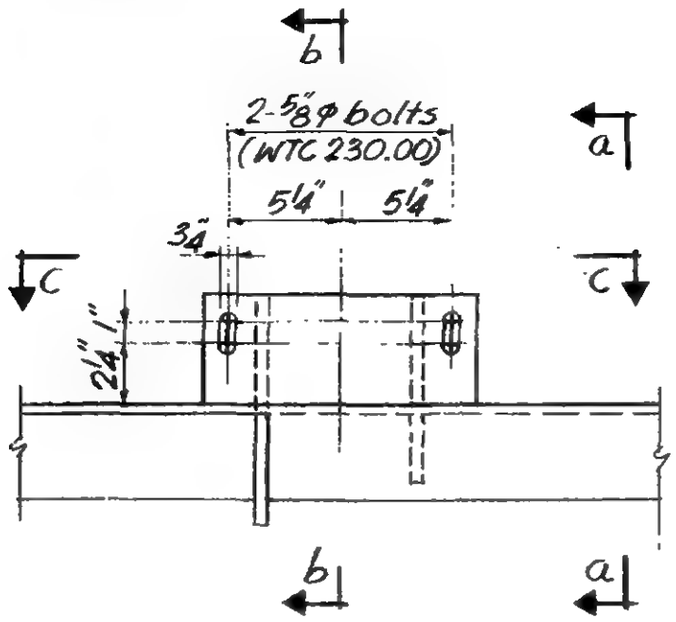

Plan

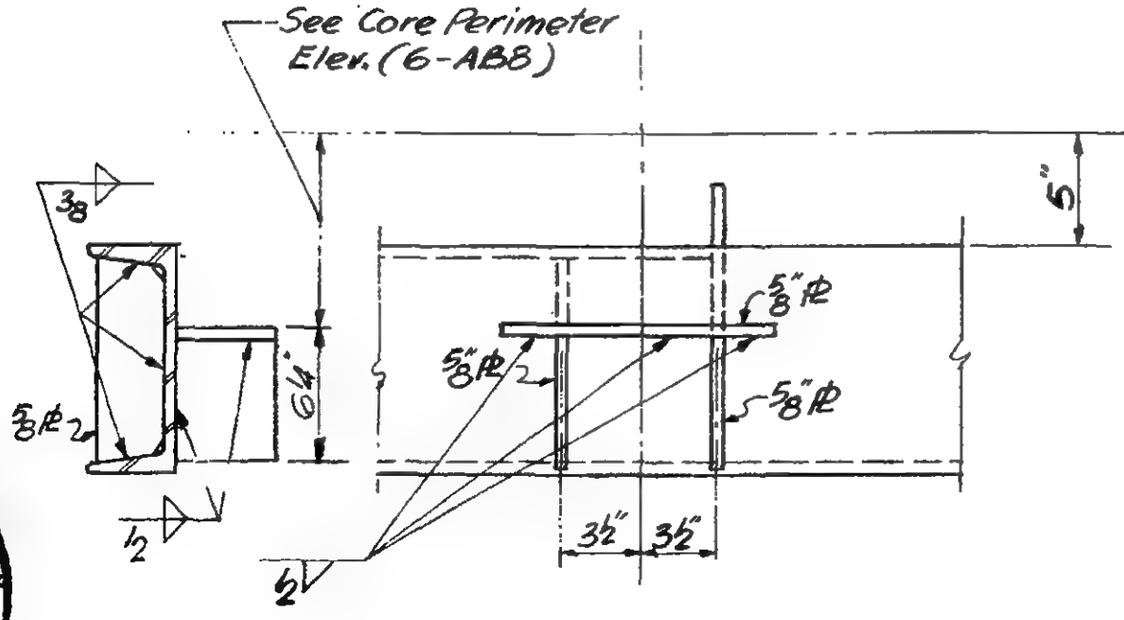

Section a-a Section c-c

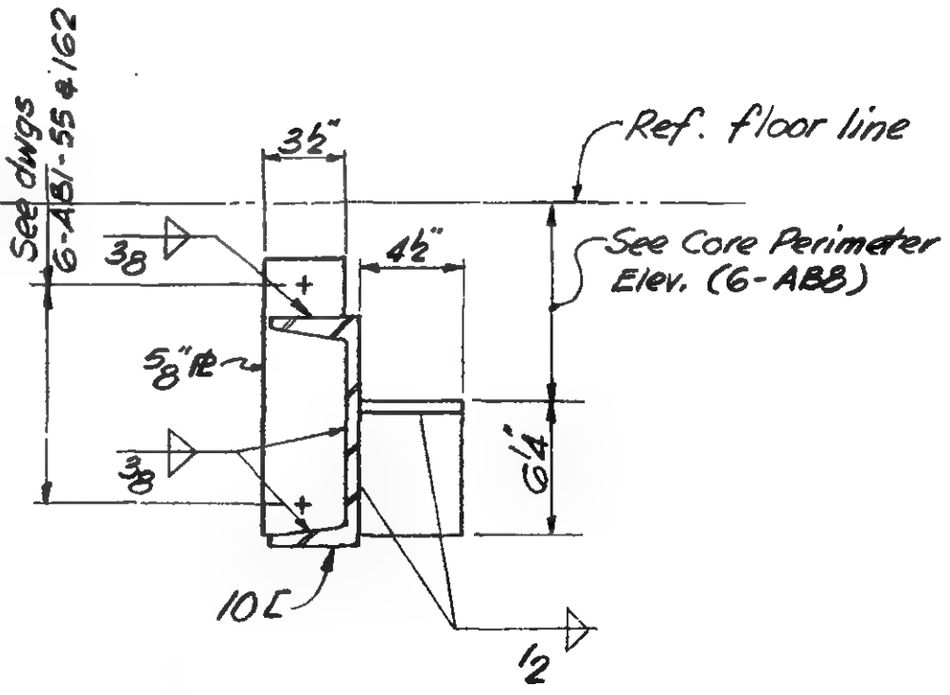

Section b-b

LICENSED PROFESSIONAL ENGINEER
LESLIE E. ROBERTSON
No. 34360
UNIVERSITY OF THE STATE OF NEW YORK

6-AB8-46

SKILLING - HELLE - CHRISTIANSEN - ROBERTSON Structural & Civil Engineers

PROJECT THE WORLD TRADE CENTER | TITLE TRUSS SEAT DETAIL 26, 27 & 28 | DATE 11-22-67

REVISIONS

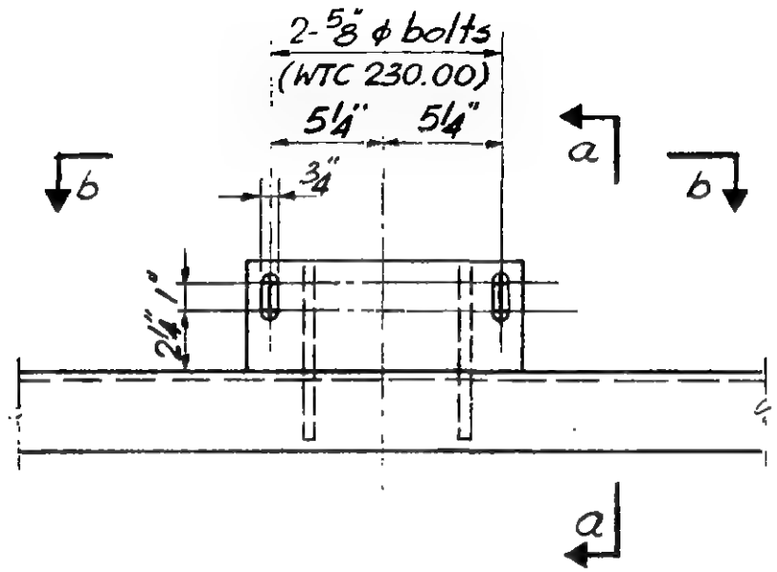

Plan

Detail	Plates		Welds	
	A	B	①	②
26	5/8"	1/2"	1/2	3/8
27	3/4"	5/8"	9/16	7/16
28	5/8"	5/8"	1/2	1/2

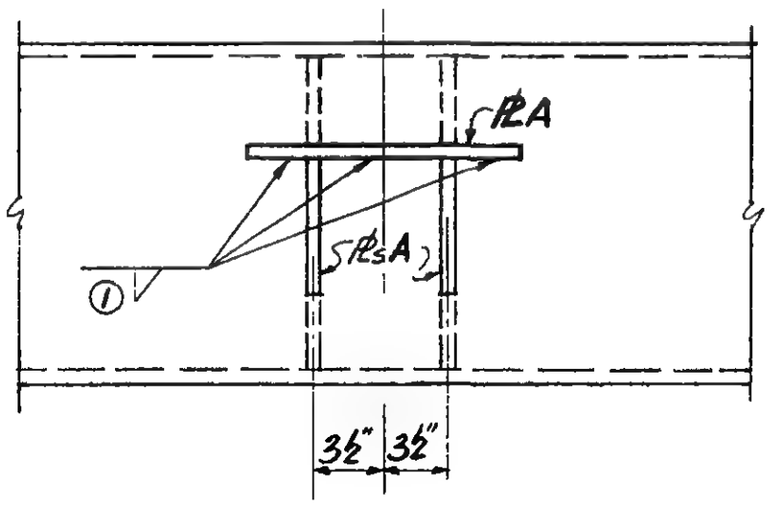

Section b-b

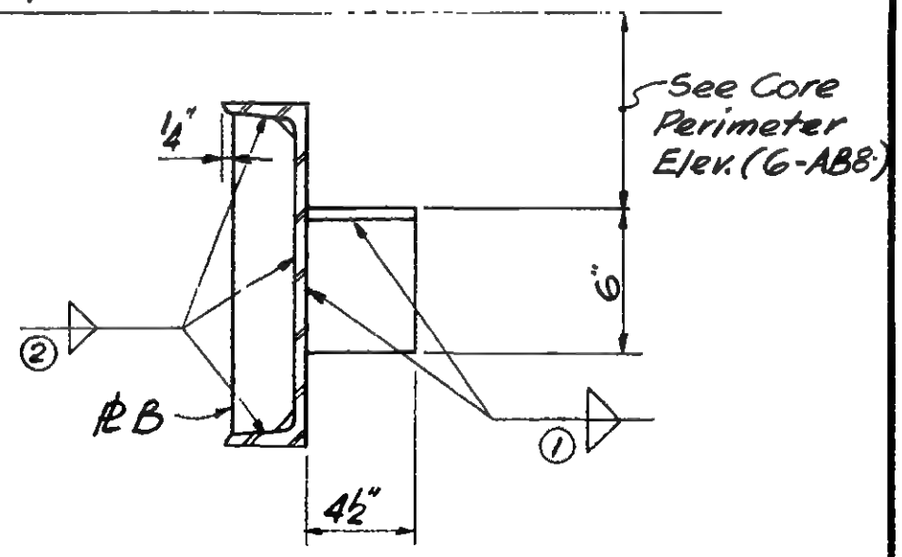

Section a-a

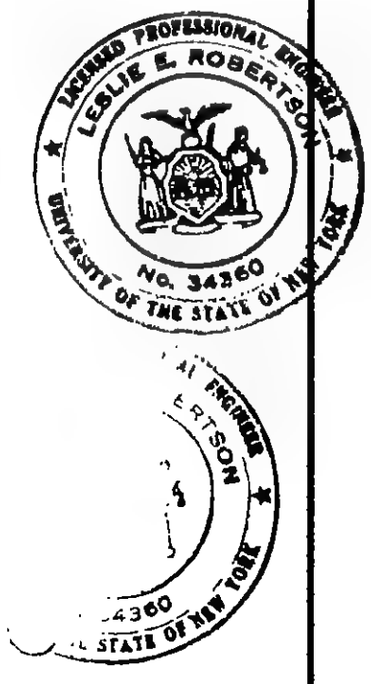

6-AB8-47

SKILLING - HELLE - CHRISTIANSEN - ROBERTSON Structural & Civil Engineers

PROJECT THE WORLD TRADE CENTER | TITLE TRUSS SEAT DETAIL 29 | DATE 11-22-67

REVISIONS

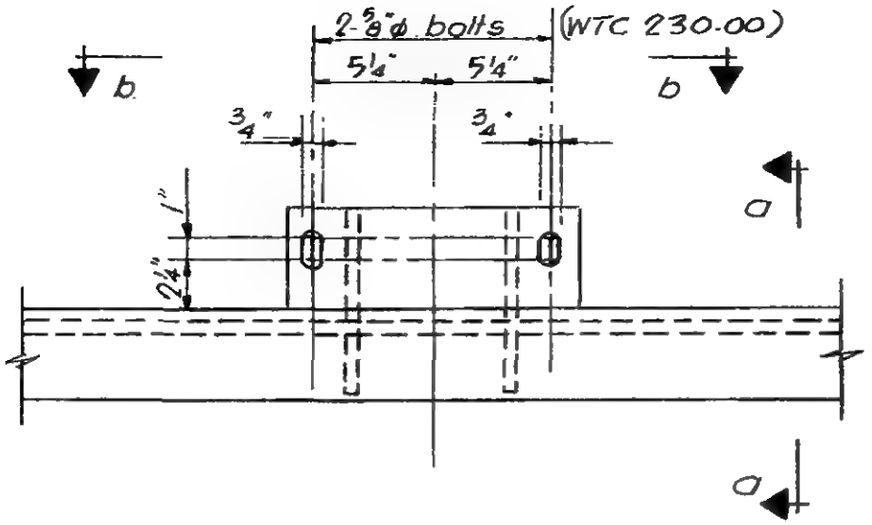

Plan

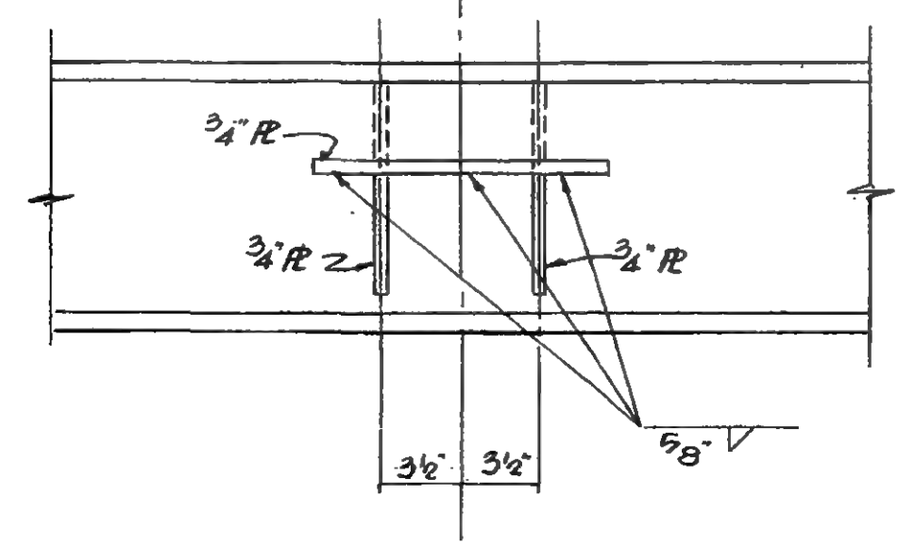

Section b-b

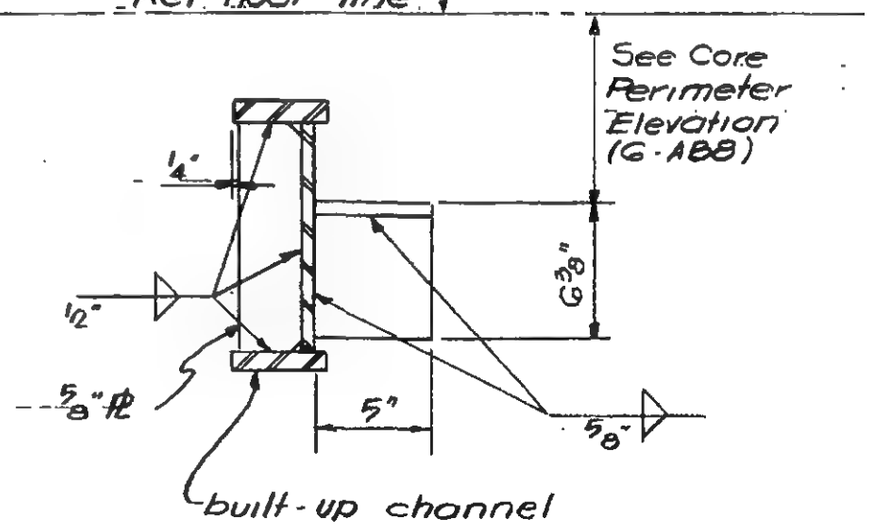

Section a-a

LICENSED PROFESSIONAL ENGINEER
LESLIE E. ROBERTSON
No. 34360
UNIVERSITY OF THE STATE OF NEW YORK

G-AB8-48

SKILLING - HELLE - CHRISTIANSEN - ROBERTSON Structural & Civil Engineers

PROJECT THE WORLD TRADE CENTER | TITLE TRUSS SEAT DETAILS 30, 31 & 32 | DATE 11-22-67

REVISIONS

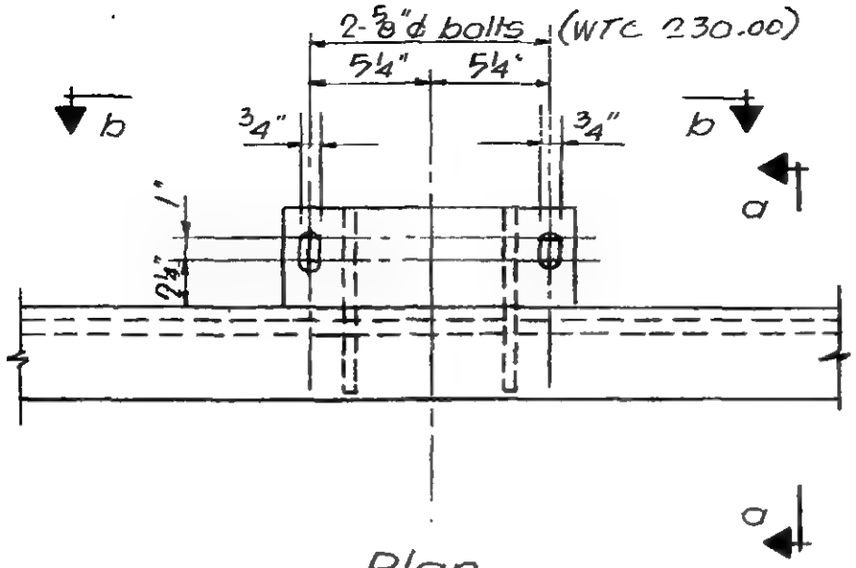

Plan

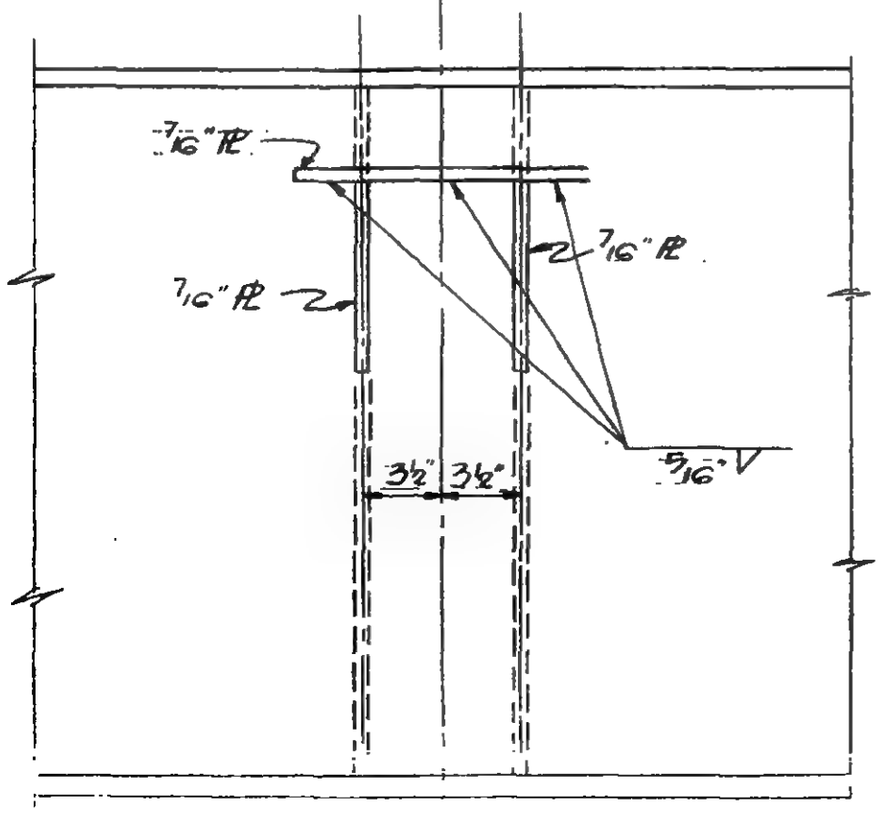

Section b-b

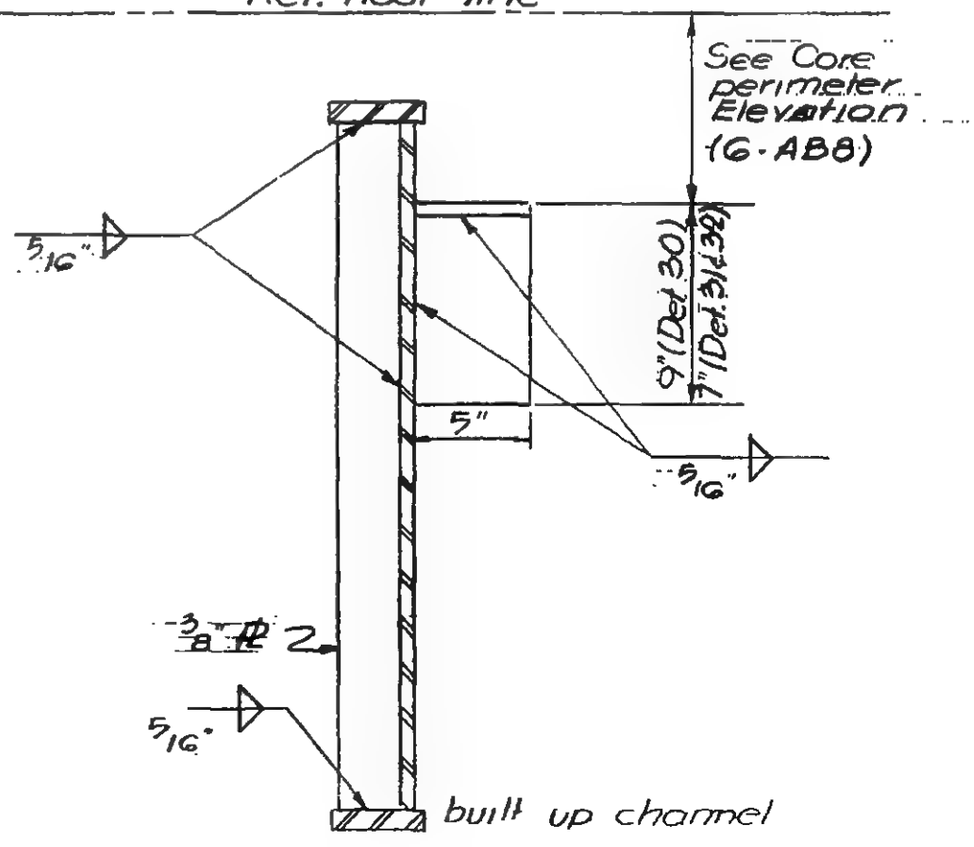

Section a-a

G-AB8-49

LESLIE E. ROBERTSON
No. 34360
UNIVERSITY OF THE STATE OF NEW YORK

SKILLING - HELLE - CHRISTIANSEN - ROBERTSON Structural & Civil Engineers

PROJECT THE WORLD TRADE CENTER | TITLE CORE PERIMETER STUD SCHEDULE | DATE 11-22-67

REVISIONS

Stud Group	Size	Spacing
1A	$\frac{3}{4}$x3	12"oc
4A	$\frac{3}{4}$x3	15"oc
7A	$\frac{3}{4}$x3	18"oc
1B	$\frac{3}{4}$x7$\frac{5}{16}$	12"oc
3B	$\frac{3}{4}$x7$\frac{5}{16}$	6"o.c
4B	$\frac{3}{4}$x7$\frac{5}{16}$	15"oc
7B	$\frac{3}{4}$x7$\frac{5}{16}$	18"oc
1C	$\frac{3}{4}$x4$\frac{1}{2}$	12"oc
4C	$\frac{3}{4}$x4$\frac{1}{2}$	15"oc
7C	$\frac{3}{4}$x4$\frac{1}{2}$	18"oc
2D	$\frac{5}{8}$x2$\frac{1}{2}$	9"oc
5D	$\frac{5}{8}$x2$\frac{1}{2}$	11"oc
8D	$\frac{5}{8}$x2$\frac{1}{2}$	14"oc
3E	$\frac{1}{2}$x2	6"oc
6E	$\frac{1}{2}$x2	7"oc
9E	$\frac{1}{2}$x2	9"oc

Placement type
See 6-AB8-50.1

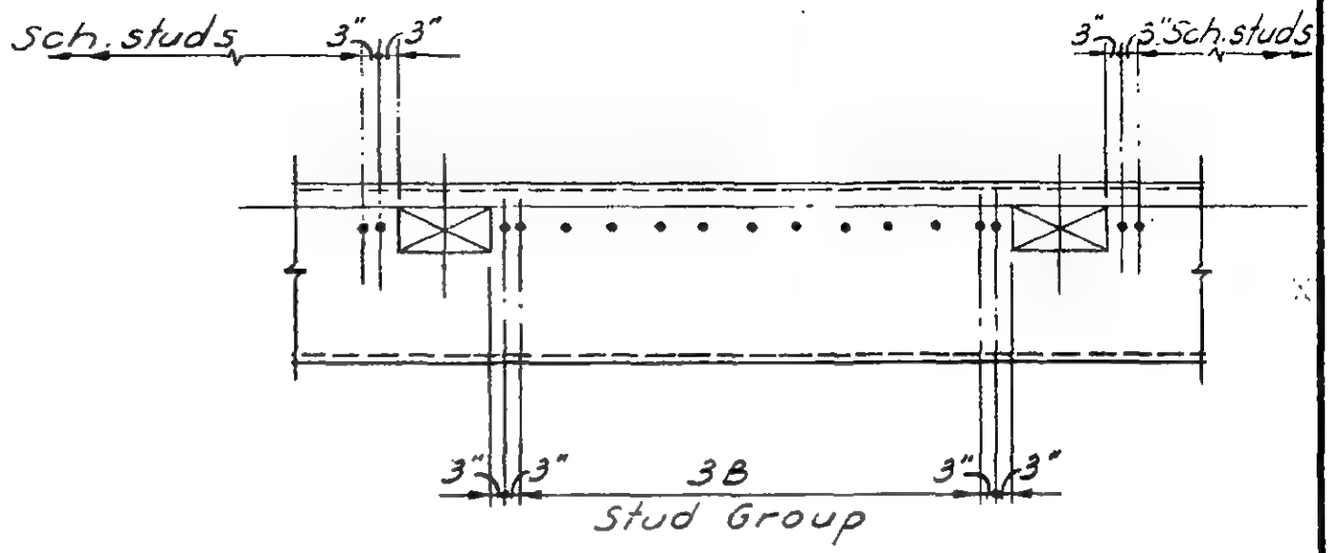

TYP. STUD GROUP @ ELECTRIC CLOSET

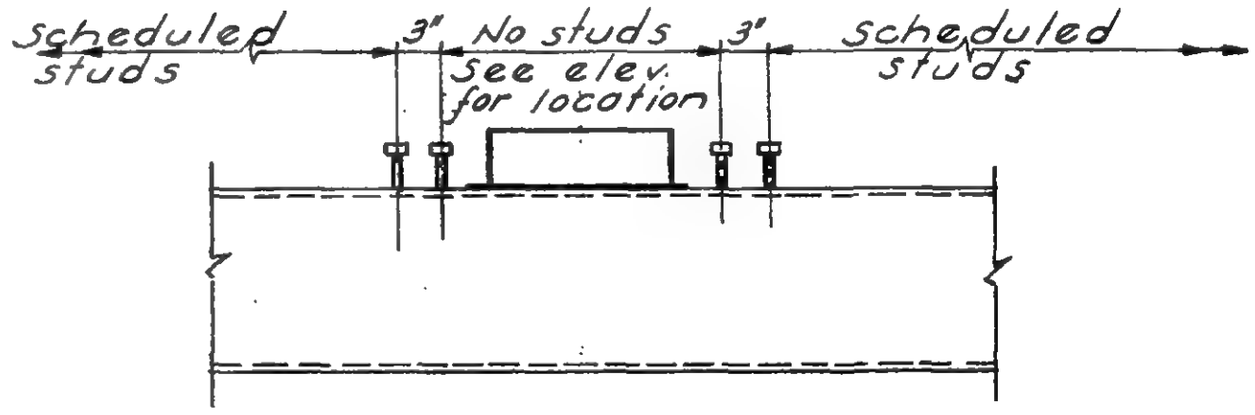

TYP. DETAIL HEADER DUCT

See 5-AB3-2 for detail at power/tele. cells

Note:

See 5-AB3-1 for General Notes.
See 5-AB3-2 for Typical Details.

LESLIE E. ROBERTSON ... No. 38... STATE OF NEW YORK

6-AB8-50

SKILLING - HELLE - CHRISTIANSEN - ROBERTSON Structural & Civil Engineers

PROJECT THE WORLD TRADE CENTER | TITLE CORE PERIMETER STUD DETAILS | DATE 11-22-67

REVISIONS

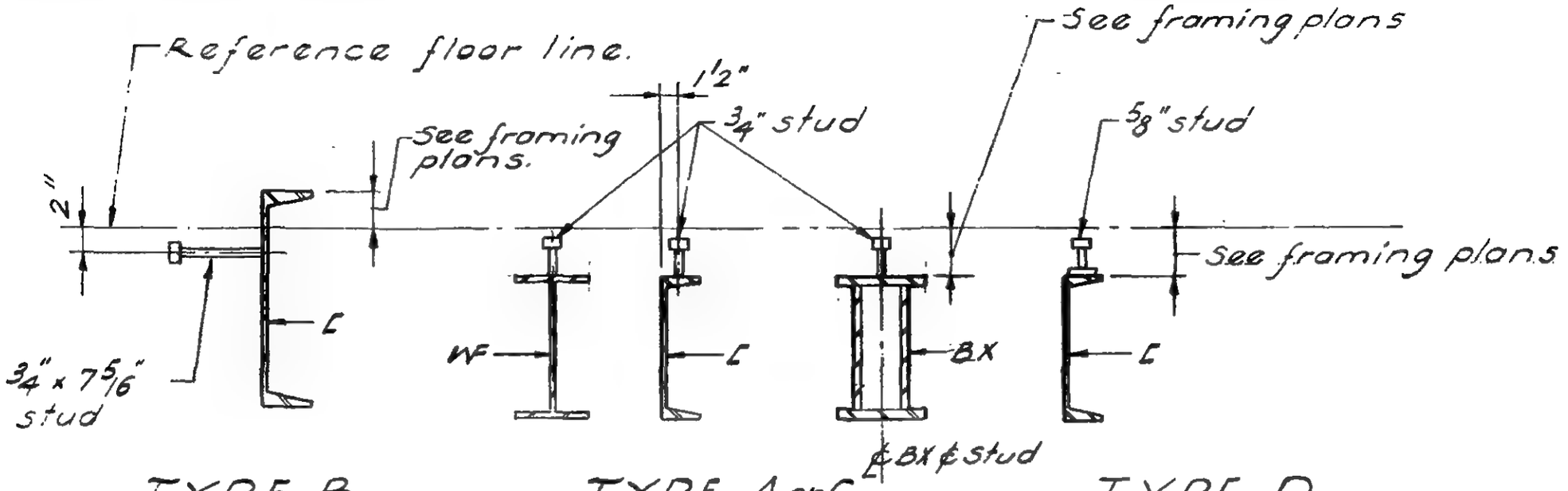

TYPE B TYPE A or C TYPE D

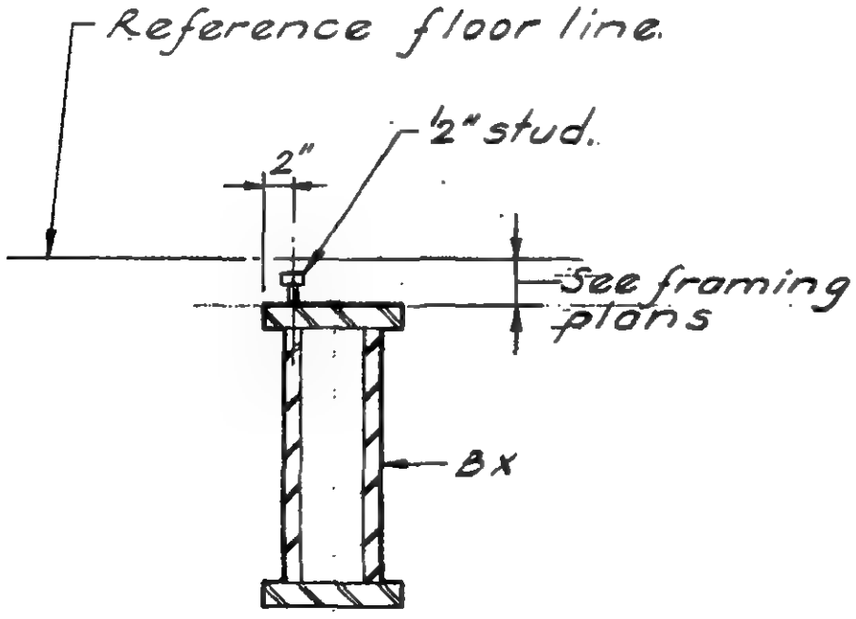

TYPE E

Note:
For stud location and spacing refer to core perimeter elevations and core perimeter stud schedule Drawing book 6-AB8

LESLIE E. ROBERTSON No. 34360

6-AB8-50.1

SKILLING - HELLE - CHRISTIANSEN - ROBERTSON Structural & Civil Engineers

PROJECT THE WORLD TRADE CENTER | TITLE CORE PERIMETER DETAIL 51 | DATE 11-22-67

REVISIONS

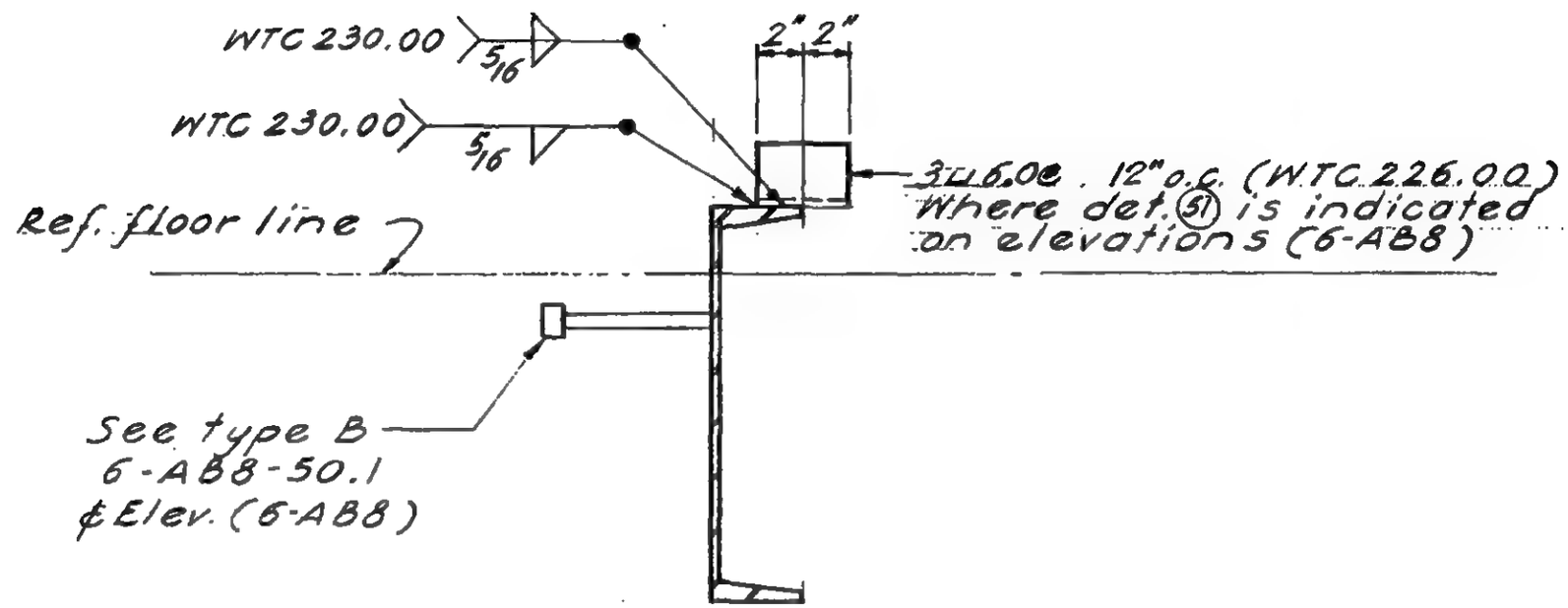

6-AB8-51

SKILLING, HELLE, CHRISTIANSEN, ROBERTSON — Structural & Civil Engineers

PROJECT THE WORLD TRADE CENTER | TITLE TRUSS SEAT DETAIL 33 & 34 | DATE 9-18-68

REVISIONS

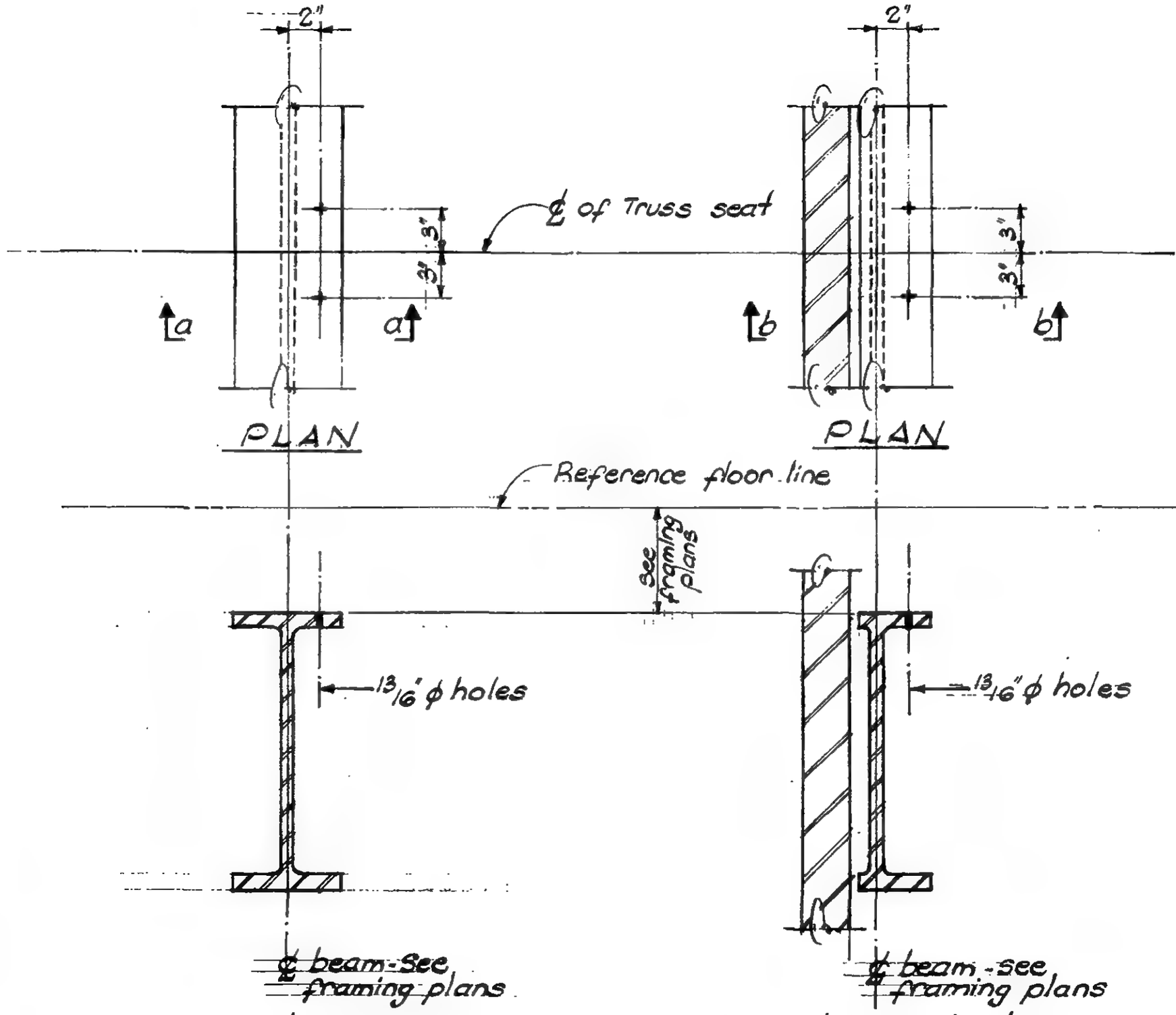

Section a-a
Detail 33

Section b-b
Detail 34

LICENSED PROFESSIONAL ENGINEER
LESLIE E. ROBERTSON
No. 34360
UNIVERSITY OF THE STATE OF NEW YORK

DESIGNED

DRAWN

REVIEWED

6-A88-52

SKILLING - HELLE - CHRISTIANSEN - ROBERTSON — Structural & Civil Engineers

PROJECT: THE WORLD TRADE CENTER | TITLE: TEMP. FRAMING FOR ELEVATOR #6 & #7 | DATE: 12-15-67

REVISIONS
1-12-68
3-29-68
1-3-69
2-3-69
3-3-69
4-1-69
Printed 5-1-69

GENERAL NOTES

1. Provide 3 beams each MK [B1], [B2] & [B3].
   Provide 2 beams each MK [B4] & [B5].
2. Connection material shall be shop welded to column shafts, except where column has been fabricated complete and stored, Connection material shall be fabricated and supplied under contract WTC 217.00 and field welded to column under contract WTC 230.00.
3. All temporary connection material for elevator framing shall be removed after elevator machinery has been relocated

INDEX

6-AB9-0	Date sheet
6-AB9-1	General Notes & Index
6-AB9-2	Temporary Framing Plan for Elevator #7 at Floors 16, 33, 48, 63
6-AB9-3	Temporary Framing Plan for Elevator #6 at Floors 12, 24, 41, 54
6-AB9-4	Temporary Framing for Elevator #6 & #7 - Detail A & B
6-AB9-5	Temporary Framing for Elevator #6 & #7 - Detail D
6-AB9-6	Temporary Framing for Elevator #6 & #7 - Detail C
6-AB9-7	Temporary Framing for Elevator #6 & #7 - Detail E
6-AB9-8	Temporary Framing for Elevator PE #44 at Floor 7
6-AB9-9	Temporary Framing for Elevator PE #44, details A & B.

LICENSED PROFESSIONAL ENGINEER
LESLIE E. ROBERTSON
No. 34360
UNIVERSITY OF THE STATE OF NEW YORK

42

SKILLING - HELLE - CHRISTIANSEN - ROBERTSON Structural & Civil Engineers

PROJECT THE WORLD TRADE CENTER | TITLE TEMPORARY FRAMING PLAN FOR ELEVATOR #7 | DATE 12-15-67

AT FLOORS 16, 33, 48, 63

REVISIONS

1-12-68

SCHEDULE				
Beam	D (in)	t_1 (in)	t_2 (in)	Weld #1 (in)
B3	21	3/4	1 1/2	3/8
B5	22	3/8	1	5/16

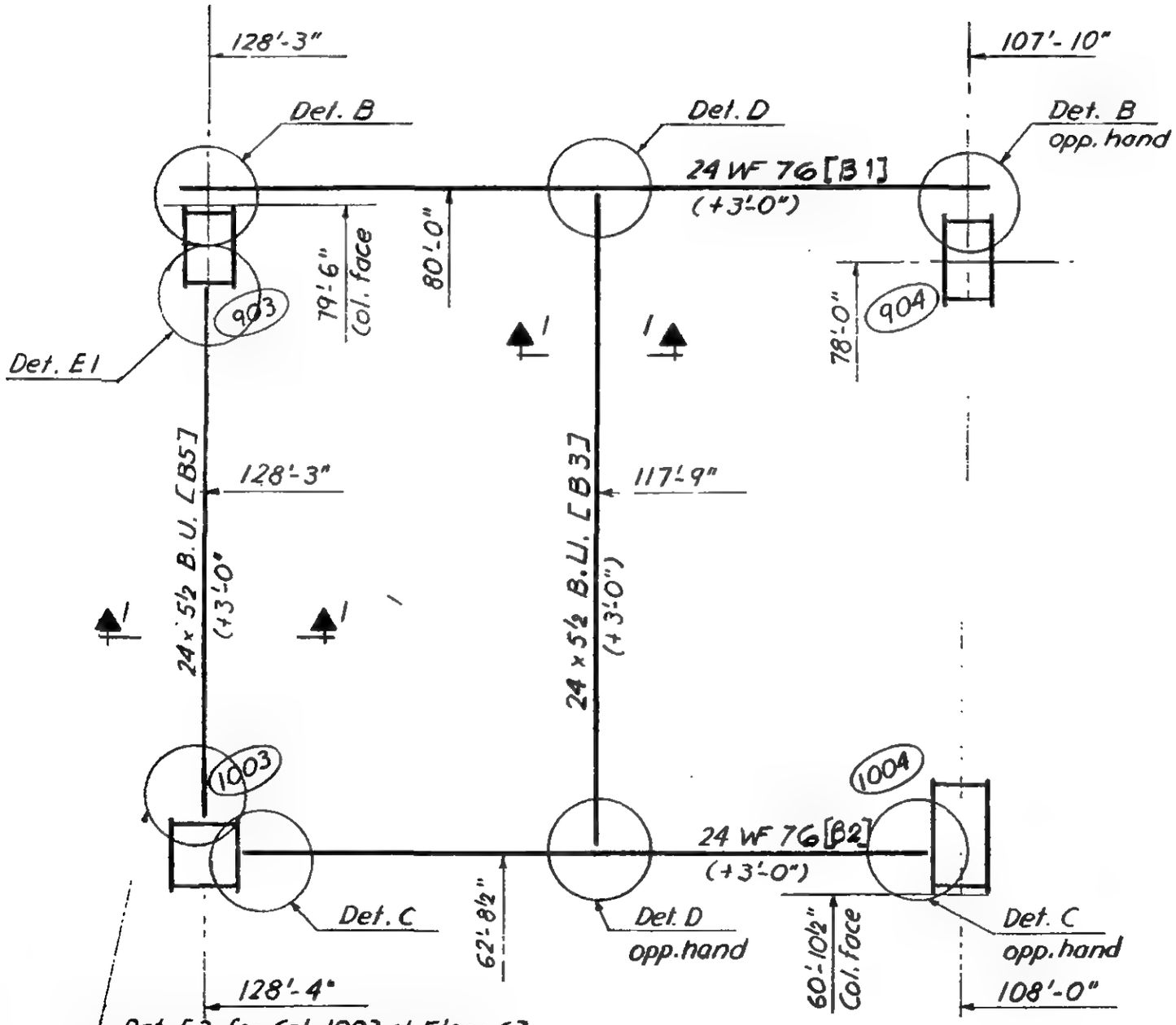

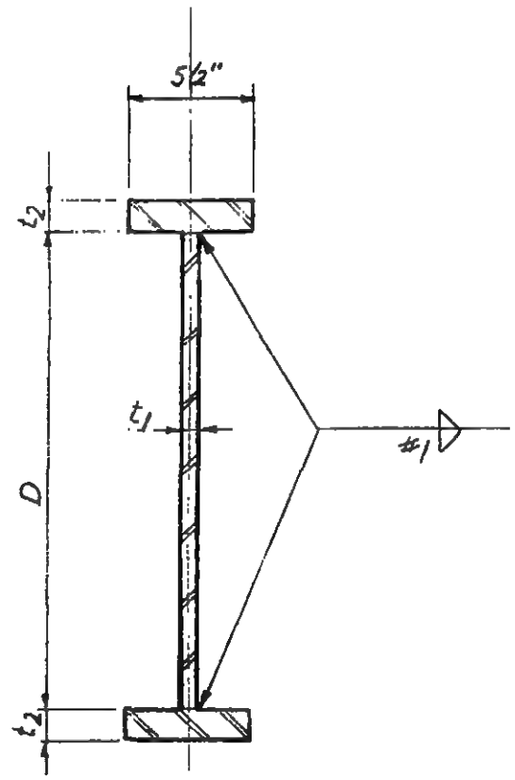

Section 1-1

Notes:

1) All steel Fy = 36 ksi
2) Top of steel at +3'-0" above reference floor except as shown.
3) See 6-AB9-4,5,6 & 7 for details.
4) See Dwg. Book #3 for column schedules.

LICENSED PROFESSIONAL ENGINEER
LESLIE E. ROBERTSON
No. 34360
UNIVERSITY OF THE STATE OF NEW YORK

6-AB9-2

SKILLING - HELLE - CHRISTIANSEN - ROBERTSON Structural & Civil Engineers

PROJECT THE WORLD TRADE CENTER | TITLE TEMPORARY FRAMING PLAN FOR ELEVATOR #6 | DATE 12-15-67

AT FLOORS 12, 24, 41, 54

REVISIONS

1-12-68

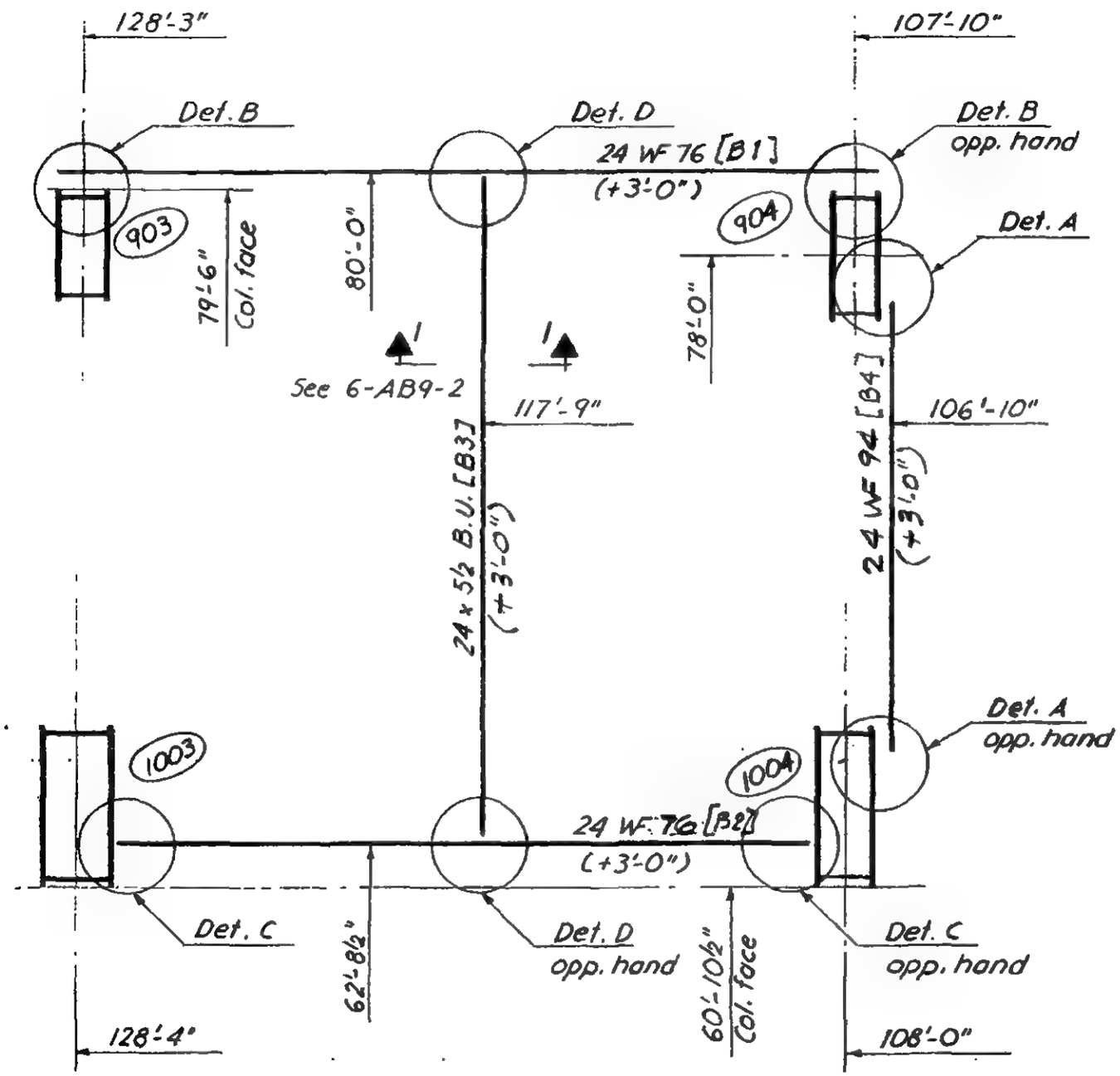

Notes:

1) All steel Fy = 36 ksi
2) Top of steel at +3'-0" above reference floor except as shown.
3) See 6-AB9-4,5,6&7 for details.
4) See Book #3 for column sch.

LICENSED PROFESSIONAL ENGINEER
LESLIE E. ROBERTSON
No. 34360
UNIVERSITY OF THE STATE OF NEW YORK

6 - AB9 - 3

SKILLING - HELLE - CHRISTIANSEN - ROBERTSON Structural & Civil Engineers

PROJECT THE WORLD TRADE CENTER | TITLE TEMP. FRAMING FOR ELEVATOR 6 & 7 - DETAIL A & B | DATE 12-15-67

REVISIONS

1- 12-68

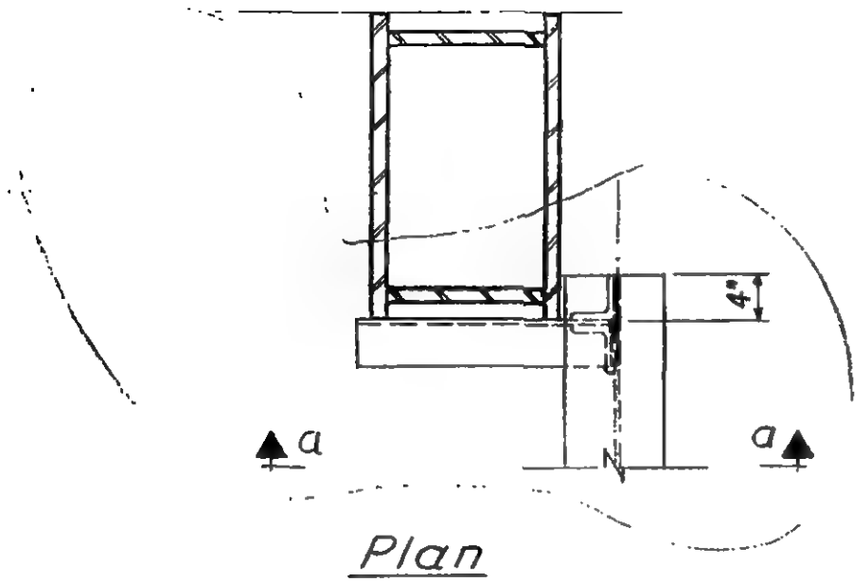

Plan

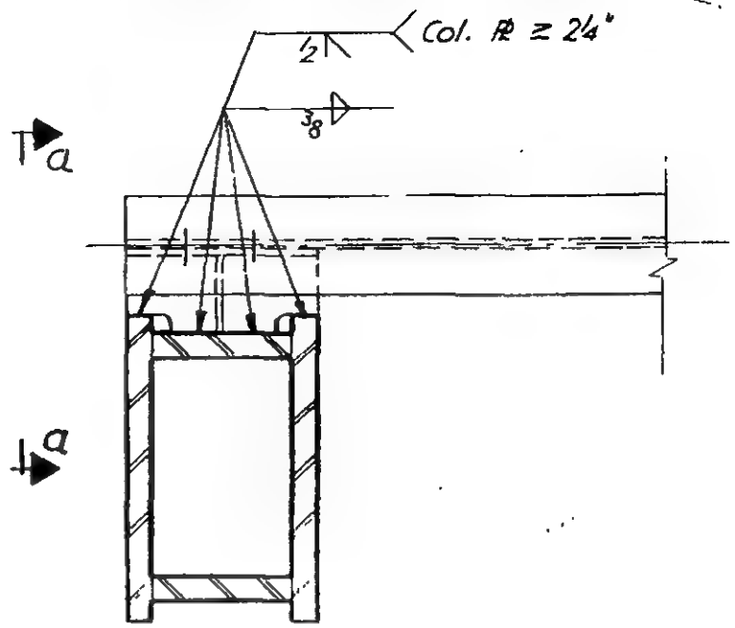

Plan

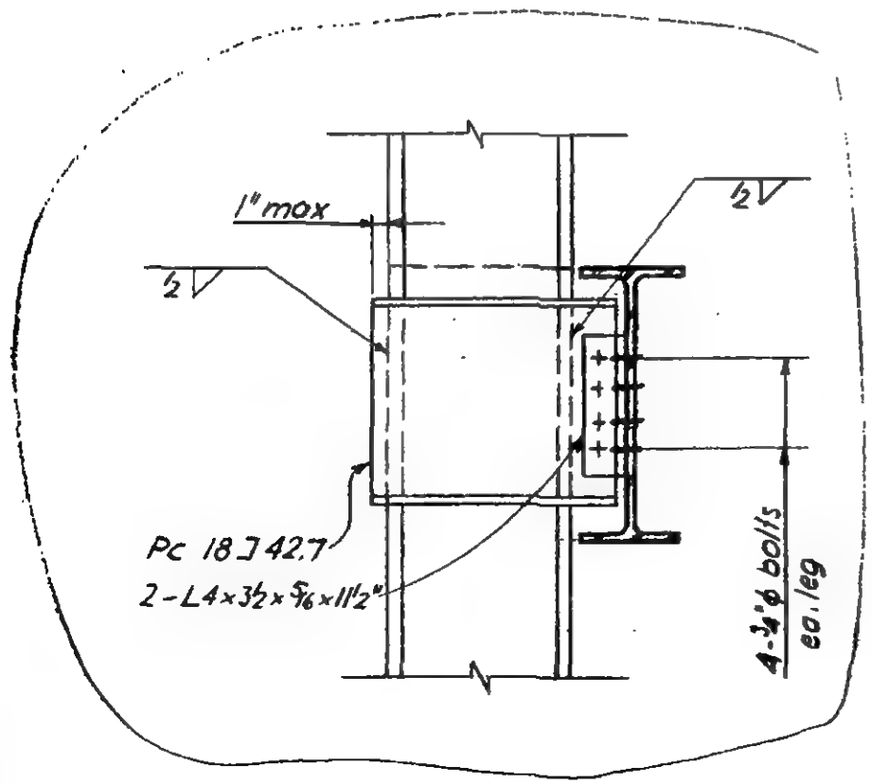

Section a-a

Detail A

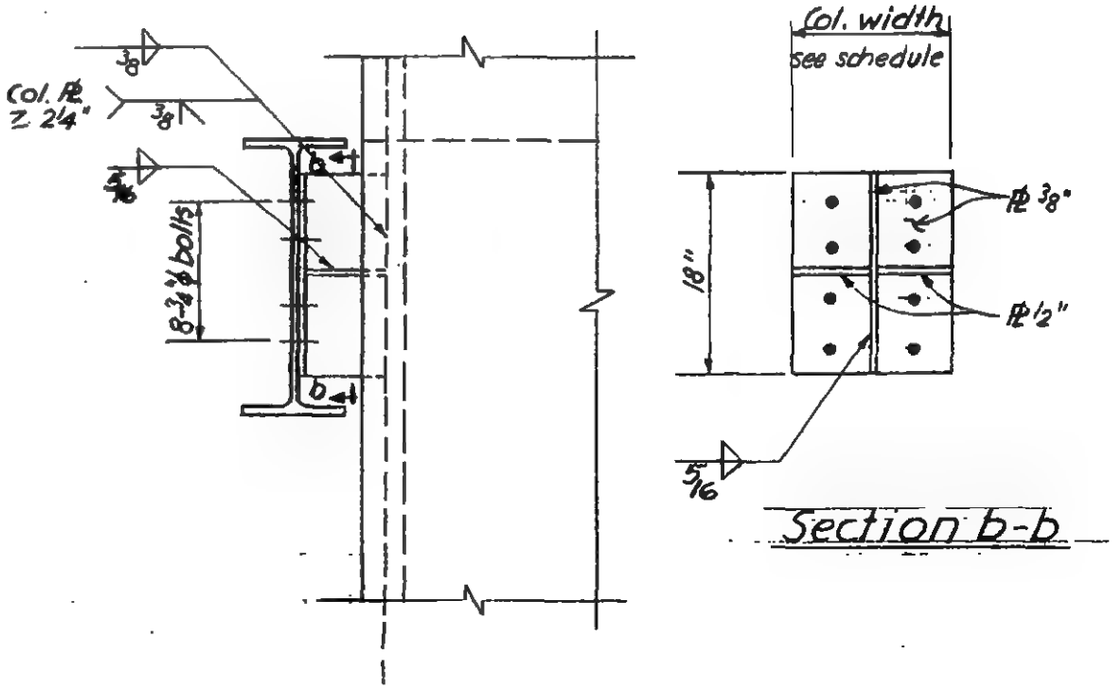

Section a-a

Section b-b

Detail B

6- AB9 - 4

LICENSED PROFESSIONAL ENGINEER
LESLIE E. ROBERTSON
No. 34360
OF THE STATE OF NEW YORK

SKILLING - HELLE - CHRISTIANSEN - ROBERTSON Structural & Civil Engineers

PROJECT THE WORLD TRADE CENTER | TITLE TEMP. FRAMING FOR ELEVATOR #6 & 7 - DETAIL (D) | DATE 12-15-67

REVISIONS

1-12-68

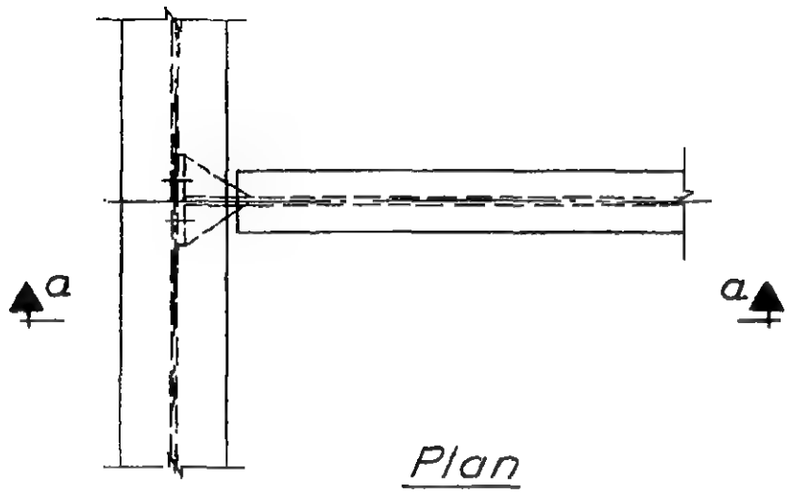

Plan

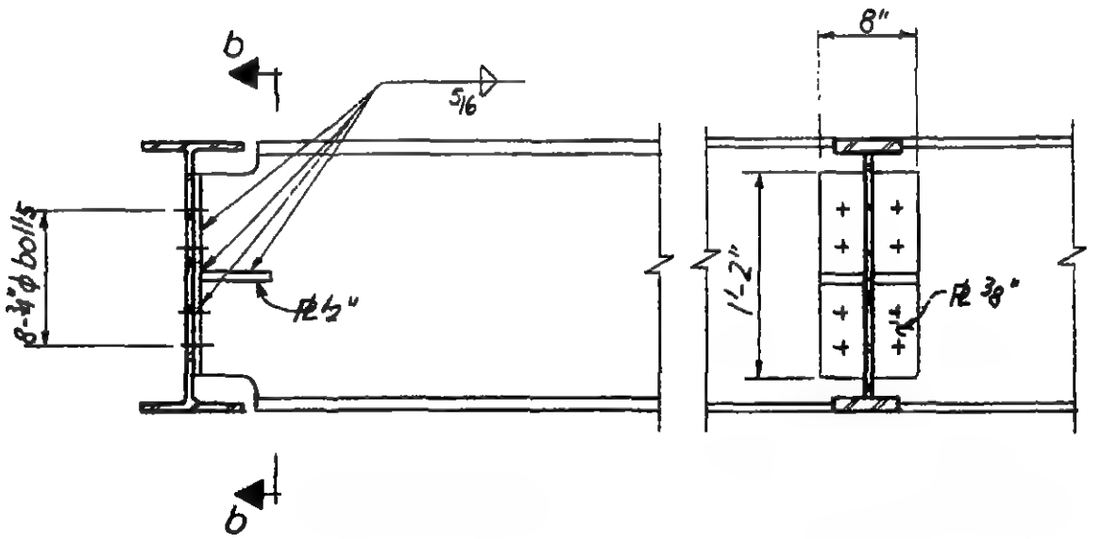

Section a-a

Section b-b

Detail D

6-AB9-5

LICENSED PROFESSIONAL ENGINEER
LESLIE E. ROBERTSON
No. 34360
UNIVERSITY OF THE STATE OF NEW YORK

SKILLING - HELLE - CHRISTIANSEN - ROBERTSON Structural & Civil Engineers

PROJECT THE WORLD TRADE CENTER | TITLE TEMP. FRAMING FOR ELEVATOR #6 & #7 - DETAIL C | DATE 1-12-68

REVISIONS

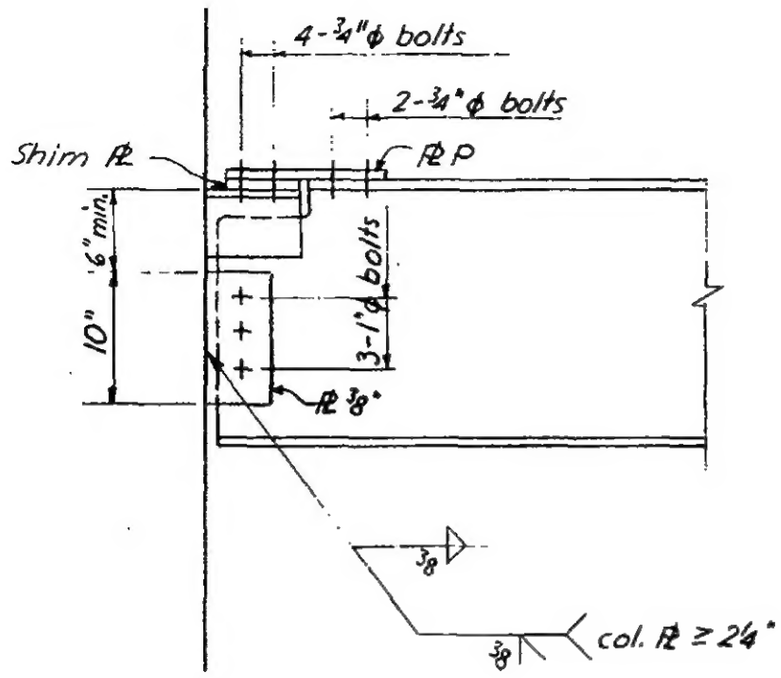

Section a-a

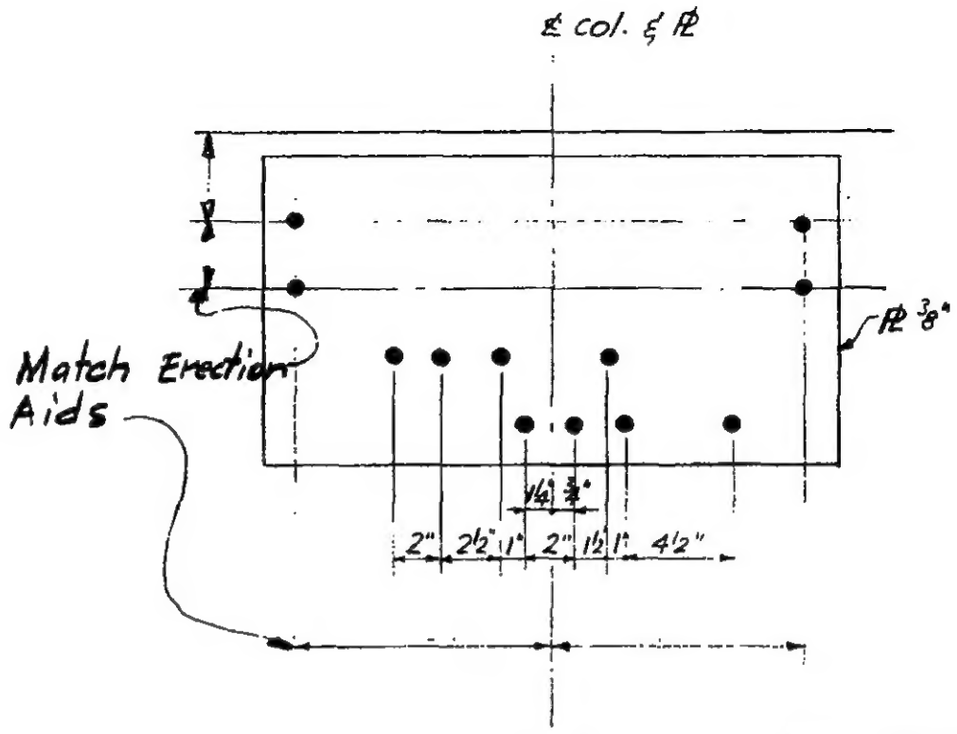

℄ P

Note: All bolt holes are for ¾"ϕ bolts

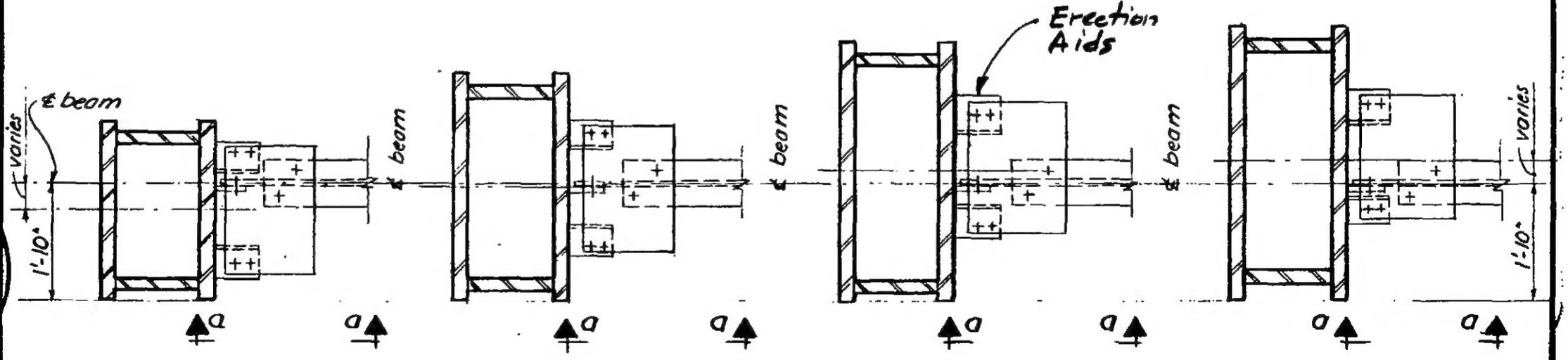

Plan
Col. 1003 Floor 63

Plan
Col. 1003 Floor 54

Plan
Col. 1003 Floor 48
Col. 1004 Floor 63

Plan
All other cases

LICENSED PROFESSIONAL ENGINEER
LESLIE E. ROBERTSON
No. 34360
STATE OF NEW YORK

6-AB9-6

SKILLING - HELLE - CHRISTIANSEN - ROBERTSON Structural & Civil Engineers

PROJECT THE WORLD TRADE CENTER | TITLE TEMP. FRAMING FOR ELEVATOR #6 & #7 - DETAIL E | DATE 1-12-68

REVISIONS

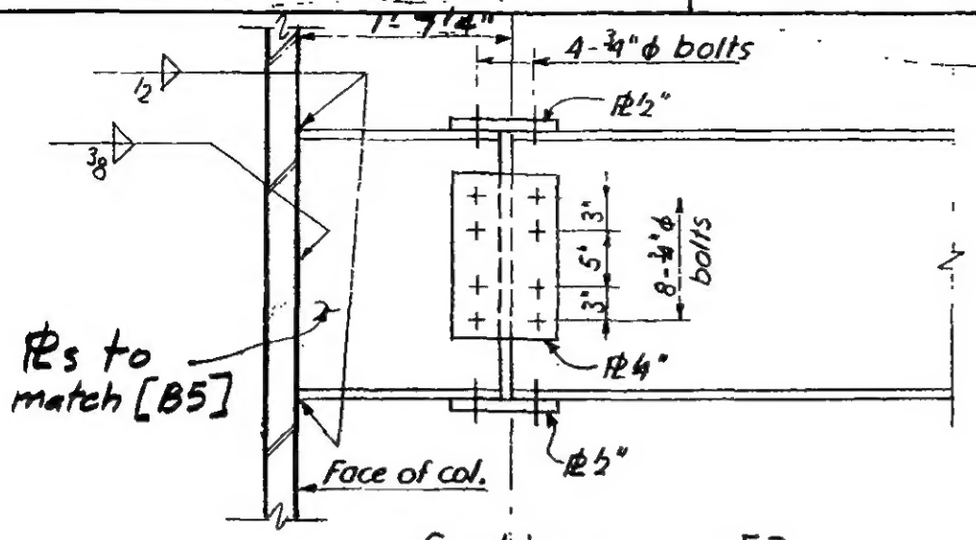

Section a-a - E3

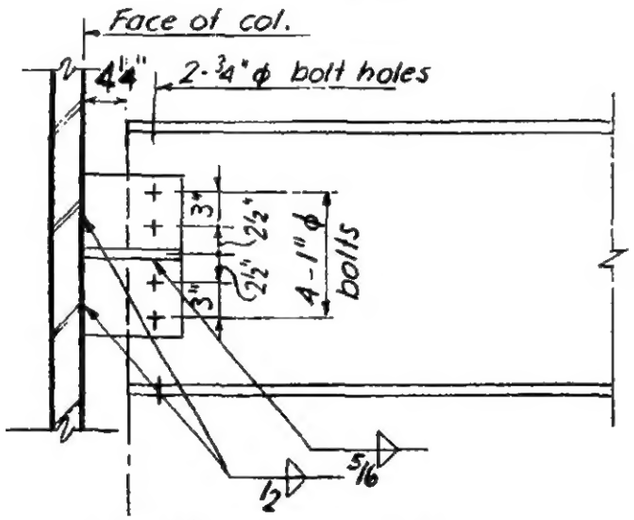

Section a-a - E2

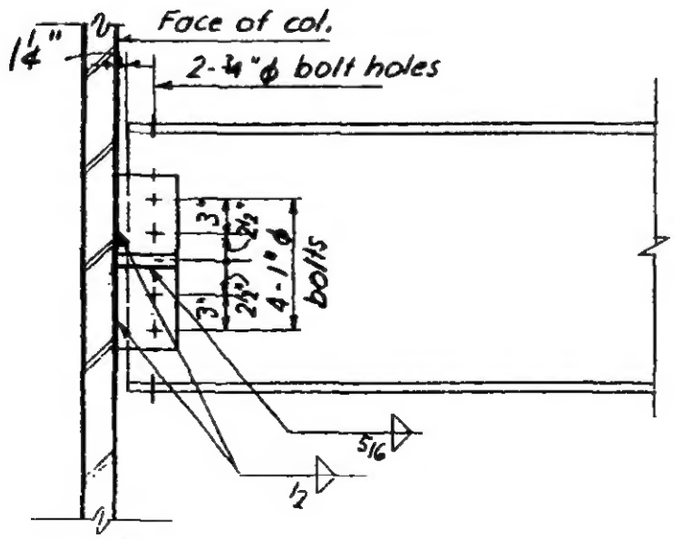

Section a-a - E1

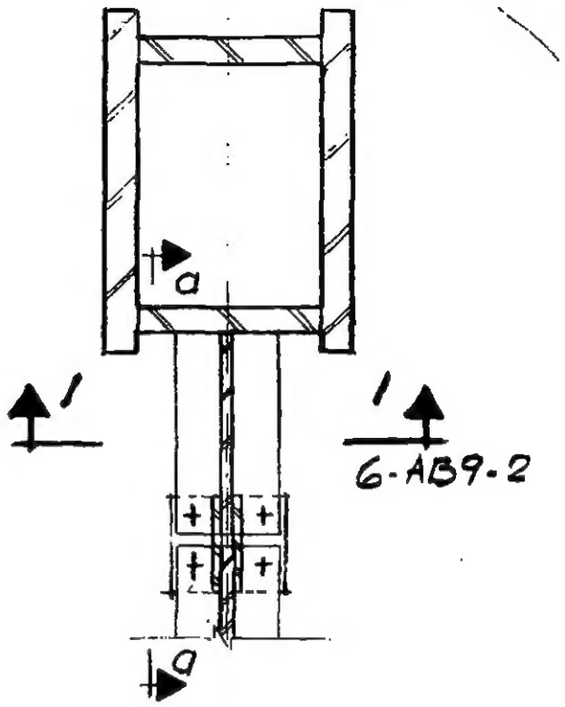

Plan E3

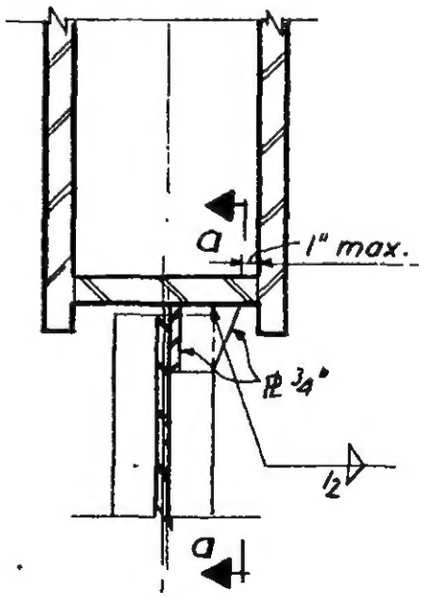

Plan E1 & E2

LICENSED PROFESSIONAL ENGINEER
LESLIE E. ROBERTSON
No. 34360
UNIVERSITY OF THE STATE OF NEW YORK

6-AB9-7

SKILLING - HELLE - CHRISTIANSEN - ROBERTSON Structural & Civil Engineers

PROJECT THE WORLD TRADE CENTER | TITLE TEMPORARY ELEVATOR SUPPORT @ 7TH FLOOR | DATE 3-29-68

REVISIONS

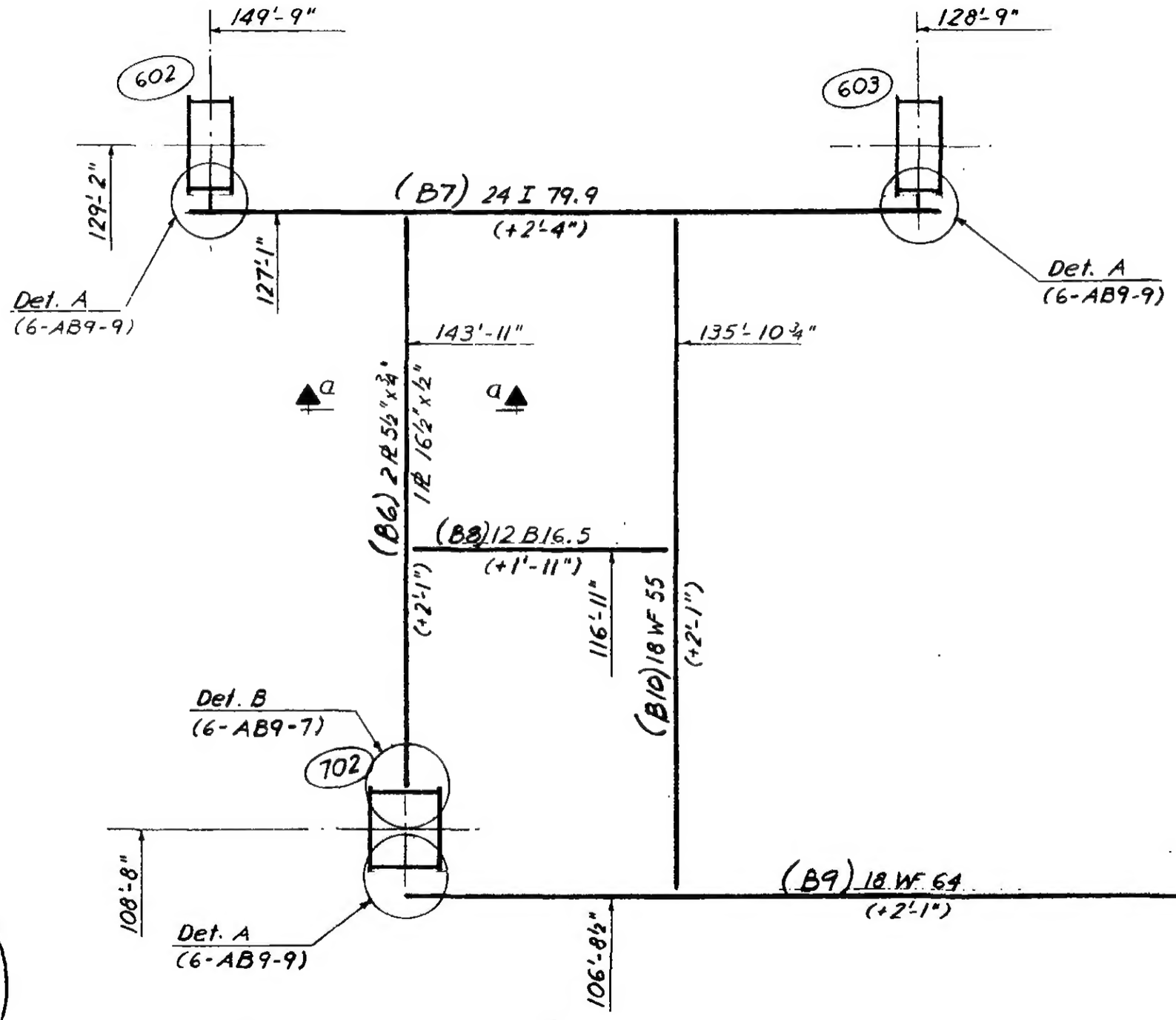

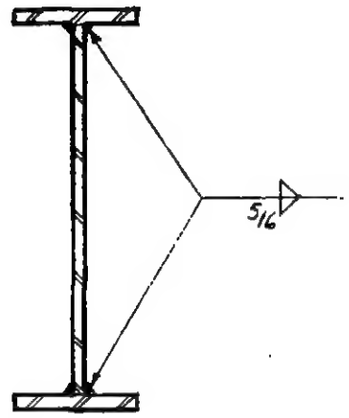

Section a-a

Note: Beams and connections to columns shall be removed after temporary elevator machines have been relocated.

LICENSED PROFESSIONAL ENGINEER
LESLIE E. ROBERTSON
No. 34360
UNIVERSITY OF THE STATE OF NEW YORK

6-AB9-8

SKILLING - HELLE - CHRISTIANSEN - ROBERTSON Structural & Civil Engineers

PROJECT THE WORLD TRADE CENTER | TITLE TEMPORARY ELEVATOR SUPPORT @ 7TH FL.- DETAILS | DATE 3-29-68

REVISIONS

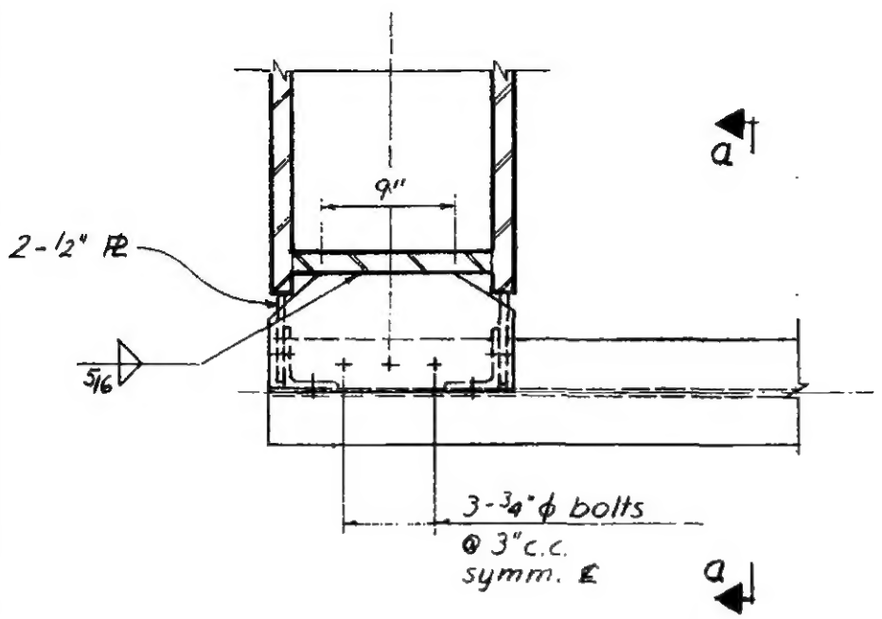

Plan
Detail A

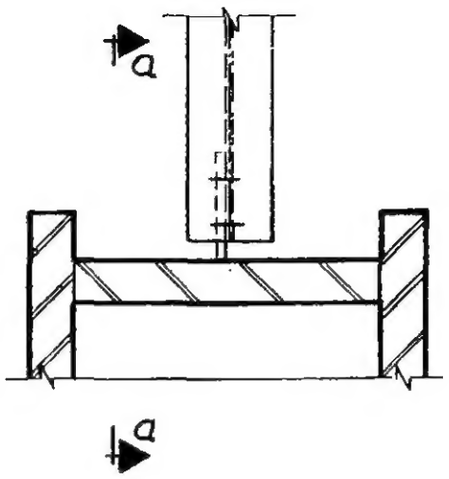

Plan
Detail B

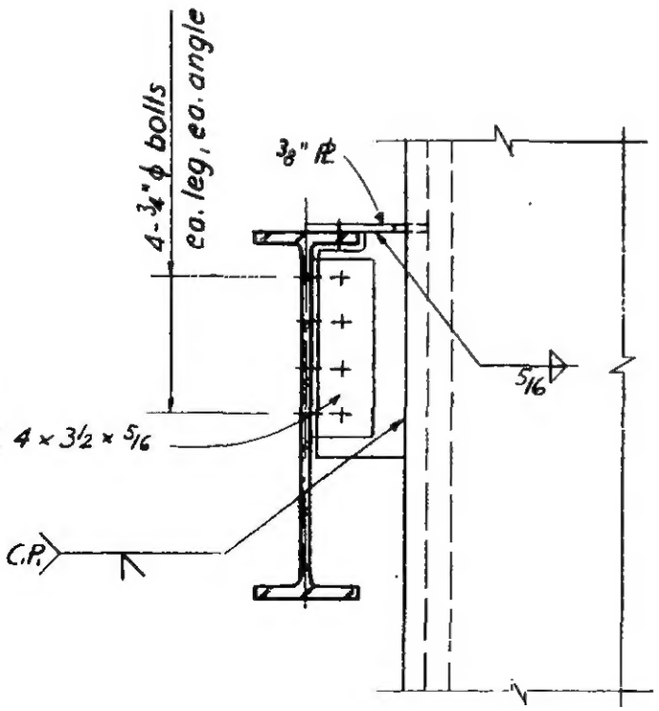

Section a-a

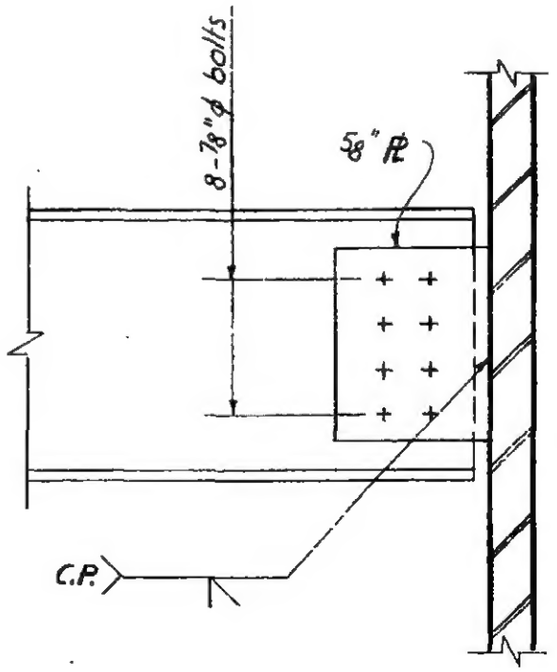

Section a-a

LICENSED PROFESSIONAL ENGINEER
LESLIE E. ROBERTSON
No. 34360
UNIVERSITY OF THE STATE OF NEW YORK

6-AB9-9